REGULAR CITY COUNCIL MEETING
AGENDA

RIVIERA BEACH, FL 33404
May 3, 2017
6:00 PM

NOTICE

IN ACCORDANCE WITH THE AMERICANS WITH DISABILITIES ACT OF 1990, PERSONS IN NEED OF A SPECIAL ACCOMMODATION TO PARTICIPATE IN THE PROCEEDINGS SHALL CONTACT THE OFFICE OF THE CITY MANAGER AT 561-845-4010 NO LATER THAN 96 HOURS PRIOR TO THE PROCEEDINGS; IF HEARING IMPAIRED, TELEPHONE THE FLORIDA RELAY SERVICES 1-800-955-8771 (TDD) OR 1-800-955-8770 (VOICE) FOR ASSISTANCE.

MAYOR

THOMAS A. MASTERS

CHAIRPERSON

KASHAMBA L. MILLER-ANDERSON - DISTRICT 2

CHAIR PRO-TEM

TONYA DAVIS JOHNSON - DISTRICT 3

COUNCILPERSONS

LYNNE L. HUBBARD - DISTRICT 1

DAWN S. PARDO - DISTRICT 4

TERENCE "TD" DAVIS - DISTRICT 5

ADMINISTRATION

JONATHAN E. EVANS, CITY MANAGER

CLAUDENE L. ANTHONY, CMC, CITY CLERK

ANDREW DeGRAFFENREIDT, III, CITY ATTORNEY

PLEASE TAKE NOTICE AND BE ADVISED, that if any interested person desires to appeal any decision made by the City Council with respect to any matter considered at this meeting, such interested person, at own expense, will need a record of the proceedings, and for such purpose may need to ensure that a verbatim record of the proceedings is made, which record includes the testimony and evidence upon which the appeal is to be based, pursuant to F.S. 286.0105.

LOBBYING - ORDINANCE 4001 - ADOPTED SEPTEMBER 2011

Lobbyist registration and reporting forms are available for you online and in print. Forms can be obtained in the Office of the City Clerk & in the Council Chambers. Registration and reporting forms shall be submitted to the Office of the City Clerk.

ANY PERSON WHO WOULD LIKE TO SPEAK ON AN AGENDA ITEM; PLEASE FILL OUT A PINK PUBLIC COMMENT CARD LOCATED IN THE BACK OF THE COUNCIL CHAMBERS AND GIVE IT TO THE STAFF PRIOR TO THE ITEM BEING TAKEN UP BY CITY COUNCIL FOR DISCUSSION. MEMBERS OF THE PUBLIC SHALL BE GIVEN A TOTAL OF THREE (3) MINUTES TO SPEAK ON ALL ITEMS LISTED ON THE CONSENT AGENDA. MEMBERS OF THE PUBLIC WILL BE GIVEN THREE (3) MINUTES TO SPEAK ON EACH REGULAR AGENDA ITEM. IN NO EVENT WILL ANYONE BE ALLOWED TO SUBMIT A COMMENT CARD AND SPEAK ON AN AGENDA ITEM AFTER THE RESOLUTION IS READ OR ITEM CONSIDERED.

CALL TO ORDER

Roll Call

Invocation

Pledge of Allegiance

AGENDA Approval:

Additions, Deletions, Substitutions

Disclosures by Council

Adoption of Agenda

Comments From the Public on Consent Agenda (Three Minute Limitation)

CONSENT AGENDA

ALL MATTERS LISTED UNDER THIS ITEM ARE CONSIDERED TO BE ROUTINE AND ACTION WILL BE TAKEN BY ONE MOTION. THERE WILL BE NO SEPARATE DISCUSSION OF THESE ITEMS UNLESS A COUNCILPERSON SO REQUESTS, IN WHICH EVENT, THE ITEM WILL BE REMOVED FROM THE GENERAL ORDER OF BUSINESS AND CONSIDERED IN ITS NORMAL SEQUENCE ON THE AGENDA.

MINUTES

RESOLUTIONS

1. **MOTION TO DIRECT THE CITY ATTORNEY TO DISMISS THE APPEAL IN CASE NO.: 50 2016 CA 002327 XXXX MB AJ.**

   CITY ATTORNEY: ANDREW DeGRAFFENREIDT, III (561) 845-4069

2. **RESOLUTION NO. 41-17 A RESOLUTION OF THE CITY COUNCIL OF THE CITY OF RIVIERA BEACH, PALM BEACH COUNTY, FLORIDA, APPROVING THE CHILD NUTRITION PROGRAMS AGREEMENT FROM THE FLORIDA DEPARTMENT OF AGRICULTURE AND CONSUMER SERVICES FOR SUMMER MEALS PROGRAM AT RIVIERA BEACH PARKS AND RECREATION DEPARTMENT SUMMER CAMPS; AUTHORIZING THE MAYOR AND CITY CLERK TO EXECUTE SAME; AND PROVIDING AN EFFECTIVE DATE.**

   DEPARTMENT DIRECTOR: RICHARD BLANKENSHIP (561) 845-3411

3. **RESOLUTION NO. 42-17 A RESOLUTION OF THE CITY COUNCIL OF THE CITY OF RIVIERA BEACH, PALM BEACH COUNTY, FLORIDA, APPROVING AMENDMENT NUMBER ONE TO AGREEMENT NUMBER R2017-0062 WITH PALM BEACH COUNTY FOR THE RESURFACING OF WEST 15TH STREET TO WEST 17TH STREET UTILIZING COMMUNITY DEVELOPMENT BLOCK GRANT FUNDS; AUTHORIZING THE MAYOR AND CITY CLERK TO EXECUTE THE AMENDMENT; AND PROVIDING AN EFFECTIVE DATE.**

   DEPARTMENT DIRECTOR: BRYNT JOHNSON (561) 845-4080

4. **RESOLUTION NO. 43-17 A RESOLUTION OF THE CITY COUNCIL OF THE CITY OF RIVIERA BEACH, PALM**

BEACH COUNTY, FLORIDA, AUTHORIZING THE PURCHASE AND DELIVERY OF A NEW 114SD FREIGHTLINER CAB AND CHASSIS FROM LOU BACHRODT FREIGHTLINER IN THE AMOUNT OF $101,988.00, AND A VAC-CON SEWER BODY MODEL V311HN/1000 FROM SOUTHERN SEWER EQUIPMENT SALES IN THE AMOUNT OF $316,022.20 BY PIGGYBACKING THE FLORIDA SHERIFFS ASSOCIATION CONTRACT NUMBER FSA16-VEH14.0 SPECIFICATION #14 AND #51; AUTHORIZING THE DIRECTOR OF FINANCE AND ADMINISTRATIVE SERVICES TO MAKE PAYMENT FOR SAME FROM ACCOUNT NUMBER 460-1127-541-0-6402 FOR THE PURCHASE IN THE AMOUNT OF $418,010.20; AND PROVIDING AN EFFECTIVE DATE.

DEPARTMENT DIRECTOR: BRYNT JOHNSON (561) 845-4066

5. **RESOLUTION NO. 44-17 A RESOLUTION OF THE CITY COUNCIL OF THE CITY OF RIVIERA BEACH, PALM BEACH COUNTY, FLORIDA, AUTHORIZING THE DIRECTOR OF FINANCE AND ADMINISTRATIVE SERVICES TO APPROPRIATE $35,000.00 FROM THE LAW ENFORCEMENT TRUST FUND (LETF) TO BE USED TO IMPLEMENT CRIME IMPACT EFFORTS, INCLUDING BUT NOT LIMITED TO, GANG RESISTANCE EDUCATION AND TRAINING (G.R.E.A.T.)/SRO EVENTS, NATIONAL NIGHT OUT AGAINST CRIME, CRIME IMPACT AND MARKETING MATERIALS, TRAINING OPPORTUNITIES, AND THE FLORIDA ATTORNEY GENERAL'S PREVENTING CRIME STATEWIDE CONFERENCE; AND PROVIDING AN EFFECTIVE DATE.**

DEPARTMENT DIRECTOR: CLARENCE WILLIAMS (561) 845-4130

COMMUNITY BENEFITS REQUESTS ON CONSENT

6. **ANQUAN BOLDIN FOUNDATION - $300 - MAYOR THOMAS A. MASTERS - TO SUPPORT SCHOLARSHIPS TO UNDERPRIVILEGED CHILDREN.**

7. **PALM BEACH CHILDREN CHORUS - $800 - MAYOR THOMAS A. MASTERS - TO SUPPORT RIVIERA BEACH STUDENTS THIS SUMMER AS THEY SING IN NEW YORK'S CARNEGIE HALL AT THE CHORAL CONVERGENCE 2017.**

8. YOUTH RECREATION ASSOCIATION OF PALM BEACH COUNTY - $900 - MAYOR THOMAS A. MASTERS - FOR THE 65TH MEMORIAL COMMUNITY AWARENESS DAY, MAY 27, 2017.

9. MINORITY INITIATIVE NETWORK, INC. - $500 - CHAIR PRO TEM TONYA DAVIS JOHNSON - FOR PRIDEFEST SUNSPLASH ALLY APPRECIATION DAY EVENT HOSTED BY RODNEY RENARD ROBERTS, INC., MAY 13, 2017.

10. OPERATION HOPE, INC. - $500 - CHAIR PRO TEM TONYA DAVIS JOHNSON - FOR 2017 AFTER-SCHOOL TUTORIAL / SUMMER CAMP.

11. FLORIDA A&M UNIVERSITY NATIONAL ALUMNI ASSOCIATION - $600 - COUNCILMAN TERENCE DAVIS - TO SUPPORT THE SCHOLARSHIPS PROGRAM FOR STUDENTS.

12. RIVIERA BEACH YOUTH EMPOWERMENT - $500 - COUNCILMAN TERENCE DAVIS - TO SUPPORT THE GED EDUCATION PROGRAM.

13. NATIONAL ALUMNI ASSOCIATION OF BETHUNE COOKMAN COLLEGE, INC. - $600 - COUNCILMAN TERENCE D. DAVIS - TO SUPPORT THE UNIVERSITY IN ITS FUND RAISING ACTIVITIES AND STUDENT RECRUITMENT.

14. FATHERS FOREVER, INC. - $500 - COUNCILWOMAN LYNNE L. HUBBARD - TO SUPPORT THE WELCOMING RECEPTION FOR CITY MANAGER JONATHAN E. EVANS, MAY 15, 2017.

END OF CONSENT AGENDA

PETITIONS AND COMMUNICATIONS FOR FILING

AWARDS AND PRESENTATIONS

15. PROCLAMATION IN RECOGNITION OF NATIONAL PUBLIC WORKS WEEK, MAY 21, 2017 THROUGH MAY 27, 2017.

    DEPARTMENT DIRECTOR: BRYNT JOHNSON (561) 845-4080

16. LUPUS AWARENESS MONTH

    CITY COUNCIL CHAIR: KASHAMBA MILLER-ANDERSON (561) 845-3684

17. **PRESENTATION OF PROJECT CONCERNING THE LEASE AGREEMENT BETWEEN THE CITY OF RIVIERA BEACH AND THE RIVIERA BEACH MARITIME ACADEMY CORPORATION.**

DEPARTMENT DIRECTOR: TERRENCE BAILEY (561) 845-4060

18. **DISCUSSION AND DELIBERATION BY COUNCIL OF C.A.P. GOVERNMENT, INC. AND THE COLD STORAGE.**

DEPARTMENT DIRECTOR: TERRENCE BAILEY (561) 845-4060
DEPUTY CITY MANAGER: DANNY JONES (561) 845-4010
BUILDING OFFICIAL: LADI MARCH (561) 845-4020

PUBLIC HEARINGS

19. **RESOLUTION NO. 45-17 A RESOLUTION OF THE CITY COUNCIL OF THE CITY OF RIVIERA BEACH, PALM BEACH COUNTY, FLORIDA, AMENDING SECTION 1 OF RESOLUTION NO. 91-16 BY DELETING THE END TIME OF 10:00 P.M. FOR CITY COUNCIL MEETINGS; AND PROVIDING AN EFFECTIVE DATE.**

CITY MANAGER: JONATHAN EVANS (561) 845-4010

20. **RESOLUTION NO. 46-17 A RESOLUTION OF THE CITY COUNCIL OF THE CITY OF RIVIERA BEACH, PALM BEACH COUNTY, FLORIDA AUTHORIZING THE SUBMITTAL OF A GRANT APPLICATION AND EXECUTION OF A GRANT AGREEMENT WITH THE FLORIDA DEPARTMENT OF ENVIRONMENTAL PROTECTION'S LAND AND WATER CONSERVATION FUND PROGRAM FOR RENOVATIONS AT THE MUNICIPAL BEACH PARK; AUTHORIZING THE CITY MANAGER TO EXECUTE THE APPLICATION; AUTHORIZING THE MAYOR AND CITY CLERK TO EXECUTE SAID AGREEMENT; AND PROVIDING AN EFFECTIVE DATE.**

DEPARTMENT DIRECTOR: RICHARD BLANKENSHIP (561) 845-3411

21. **RESOLUTION NO. 47-17 A RESOLUTION OF THE CITY COUNCIL OF THE CITY OF RIVIERA BEACH, PALM**

BEACH COUNTY, FLORIDA, APPROVING AN APPLICATION FROM THE EQUITAS MANAGEMENT GROUP, LLC. AND THOMAS ENGINEERING GROUP, LLC. FOR SITE PLAN APPROVAL TO DEVELOP A SINGLE STORY 8,247 SQUARE FOOT RETAIL BUILDING ON 0.92 ACRE OF 1.93 ACRES OF VACANT COMMERCIAL LAND LOCATED AT PARCEL CONTROL NUMBER 56-43-42-28-31-015-0010; AND PROVIDING FOR AN EFFECTIVE DATE.
DEPARTMENT DIRECTOR: TERRENCE BAILEY (561) 845-4060

22. **RESOLUTION NO. 48-17 A RESOLUTION OF THE CITY COUNCIL OF THE CITY OF RIVIERA BEACH, PALM BEACH COUNTY, FLORIDA, APPROVING THE PLAT ENTITLED "AVENUE L RETAIL AT AUSTRALIAN AND BLUE HERON", TOTALING APPROXIMATELY 1.93 ACRES, LOCATED AT PARCEL CONTROL NUMBER 56-43-42-28-31-015-0010; AUTHORIZING THE MAYOR, CITY CLERK, AND CITY ENGINEER TO SIGN THE PLAT ENTITLED "AVENUE L RETAIL STORE AT AUSTRALIAN AND BLUE HERON"; AND PROVIDING AN EFFECTIVE DATE.**
DEPARTMENT DIRECTOR: TERRENCE BAILEY (561) 845-4060

23. **RESOLUTION NO. 49-17 A RESOLUTION OF THE CITY COUNCIL OF THE CITY OF RIVIERA BEACH, PALM BEACH COUNTY, FLORIDA, AUTHORIZING THE CITY MANAGER TO TRANSMIT NOTICE TO THE FLORIDA DEPARTMENT OF ECONOMIC OPPORTUNITY THAT THE CITY INTENDS ON PREPARING AN EVALUATION AND APPRAISAL REPORT OF THE CITY'S COMPREHENSIVE PLAN; AUTHORIZING THE DIRECTOR OF FINANCE AND ADMINISTRATIVE SERVICES TO TRANSFER $25,000 FROM ACCOUNT NUMBER 001-0714-515-0-1201 IN ORDER TO CREATE ACCOUNT NUMBER 001-0714-515-0-3107 ENTITLED, COMPREHENSIVE PLAN UPDATE FOR PROFESSIONAL MODERATOR SERVICES FOR THE PUBLIC WORKSHOPS ASSOCIATED WITH THE PROPOSED COMPREHENSIVE PLAN AMENDMENTS; AND PROVIDING FOR AN EFFECTIVE DATE.**

DEPARTMENT DIRECTOR: TERRENCE BAILEY (561) 845-4060

ORDINANCES ON SECOND AND FINAL READING

24. ORDINANCE NO. 4095 AN ORDINANCE OF THE CITY OF THE CITY COUNCIL OF THE CITY OF RIVIERA BEACH, PALM BEACH COUNTY, FLORIDA, PROHIBITING THE PRACTICE OF CONVERSION THERAPY ON PATIENTS WHO ARE MINORS; PROVIDING FOR CODIFICATION PURSUANT TO §1-8 OF THE CITY'S CODE OF ORDINANCES; PROVIDING FOR CONFLICT, SEVERABILITY, AND FOR OTHER PURPOSES; AND PROVIDING AN EFFECTIVE DATE.

DEPUTY CITY MANAGER: DANNY JONES (561) 845-4010

COMMENTS FROM THE PUBLIC - 7:30 PM Non-Agenda Item Speakers (Three Minute Limitation)

Public Comment should be restricted to issues, matters, or topics pertinent to the City of Riviera Beach. Please be reminded that the City Council has adopted "Rules of Decorum Governing Public Conduct during Official Meetings", which has been posted at the entrance of the Council Chambers. In an effort to preserve order, if any of the rules are not adhered to, the Council Chair may have any disruptive speaker or attendee removed from the podium, from the meeting and/or the building, if necessary. Please govern yourselves accordingly.

Public Comments shall begin at 7:30 PM unless there is no further business of the City Council, which in that event, it shall begin sooner. In addition; if an item is being considered at 7:30 PM, then comments from the public shall begin immediately after the item has been concluded.

REGULAR - OLD BUSINESS

REGULAR

25. RESOLUTION NO. 50-17 A RESOLUTION OF THE CITY COUNCIL OF THE CITY OF RIVIERA BEACH, PALM BEACH COUNTY, FLORIDA, RE-ESTABLISHING THE RIVIERA BEACH EDUCATION ADVISORY COMMITTEE (RBEAC); SETTING FORTH THE TERMS AND CONDITIONS UNDER WHICH THE COMMITTEE SHALL OPERATE; AND PROVIDING AN EFFECTIVE DATE.
DEPUTY CITY MANAGER: DANNY JONES (561) 845-4010

ITEMS TABLED

DISCUSSION AND DELIBERATION

26. SOLICITATION OF PROFESSIONAL SERVICES FOR A

LABOR ATTORNEY AND A HUMAN RESOURCES PRACTITIONER FOR THE PURPOSES OF REVIEWING CURRENT ORGANIZATIONAL PRACTICES.

CITY MANAGER: JONATHAN EVANS (561) 845-4010

27. DISCUSSION AND DELIBERATION BY COUNCIL FOR THE CITY OF RIVIERA BEACH TO IMPLEMENT A SUMMER YOUTH EMPLOYMENT (SYEP) AND JOB TRAINING PROGRAM FOR QUALIFYING RIVIERA BEACH YOUTH.

DEPARTMENT DIRECTOR: CLARENCE WILLIAMS (561) 845-4130

28. DISCUSSION AND DELIBERATION ON THE WELLNESS RESORT AND SPA PROJECT, APPROVED AT 3100 NORTH OCEAN DRIVE, BY CITY RESOLUTION NO. 143-15 ON OCTOBER 12, 2015.

DEPARTMENT DIRECTOR: TERRENCE BAILEY (561) 845-4060

29. APPROVAL OF FINALIST FOR THE POSITION OF UTILITY DISTRICT EXECUTIVE DIRECTOR.

ACTING UTILITY DIRECTOR: TROY PERRY (561) 845-4053

30. DISCUSSION AND DELIBERATION OF CITY MANAGER EVALUATION CRITERIA.

CITY MANAGER: JONATHAN EVANS (561) 845-4010

DISCUSSION BY CITY MANAGER

DISCUSSION BY CITY ATTORNEY

CITY COUNCIL COMMITTEE REPORTS

STATEMENTS BY THE MAYOR AND CITY COUNCIL

ADJOURNMENT

CITY OF RIVIERA BEACH CITY COUNCIL
AGENDA ITEM SUMMARY

Meeting Date: 5/3/2017

Agenda Category: CONSENT

Subject: Motion to direct the City Attorney to dismiss the appeal in Case No.: 50 2016 CA 002327 XXXX MB AJ.

Recommendation/Motion:

Originating Dept	City Attorney's Office	**Costs**	
User Dept.		**Funding Source**	
Advertised	No	**Budget Account Number**	
Date			
Paper			
Affected Parties	Not Required		

Background/Summary:

Fiscal Years
Capital Expenditures
Operating Costs
External Revenues
Program Income (city)
In-kind Match (city)
Net Fiscal Impact
NO. Additional FTE Positions (cumulative)

III. Review Comments

A. Finance Department Comments:

B. Purchasing/Intergovernmental Relations/Grants Comments:

C. Department Director Review:

Contract Start Date

Contract End Date

Renewal Start Date

Renewal End Date

Number of 12 month terms this renewal

Dollar Amount

Contractor Company Name

Contractor Contact

Contractor Address

Contractor Phone Number

Contractor Email

Type of Contract

Describe

REVIEWERS:

Department	Reviewer	Action	Date
City Manager	Evans, Jonathan	Approved	4/26/2017 - 6:08 PM

CITY OF RIVIERA BEACH CITY COUNCIL
AGENDA ITEM SUMMARY

Meeting Date: 5/3/2017

Agenda Category: CONSENT REGULAR

Subject: Approve Child Nutrition Program Agreement for Summer Food Program at Riviera Beach Parks and Recreation Camps

---

Recommendation/Motion: Approve the Child Nutrition Programs Agreement through the Florida Department of Agriculture and Consumer Services.

Originating Dept	Parks and Recreation	**Costs**	
User Dept.	Parks and Recreation	**Funding Source**	
Advertised	No	**Budget Account Number**	
Date			
Paper			
Affected Parties	Not Required		

Background/Summary:

As a part of the Riviera Beach Parks and Recreation Summer Camps food service is a major element of the program. The Parks and Recreation Department participates in the summer meals program through the Florida Dept. of Agriculture and Consumer Services. Camp participants are provided a breakfast and a lunch through this program as well as snacks from other sources.

This is a reimbursed grant program where Parks and Recreation expends the funds to purchase the meals and the department is reimbursed for those cost. The program expends approximately $30,000 per summer and reimbursed accordingly.

The agreement must be approved and executed in order for the Department to partake in the program.

Fiscal Years
Capital Expenditures
Operating Costs
External Revenues
Program Income (city)
In-kind Match (city)
Net Fiscal Impact
NO. Additional FTE Positions (cumulative)

III. Review Comments

A. Finance Department Comments:

B. Purchasing/Intergovernmental Relations/Grants Comments:

C. Department Director Review:

Contract Start Date

Contract End Date

Renewal Start Date

Renewal End Date

Number of 12 month terms this renewal

Dollar Amount

Contractor Company Name

Contractor Contact

Contractor Address

Contractor Phone Number

Contractor Email

Type of Contract

Describe

ATTACHMENTS:

File Name	Description	Upload Date	Type
Child_Nutrition_agreementresolution.doc	Child Nutrition Agrement Resolution	4/13/2017	Resolution
Child_Nutrition_agreement.pdf	Child Nutrition Agreement	4/13/2017	Agreement

REVIEWERS:

Department	Reviewer	Action	Date
Recreation Park	Franks, Aladia	Approved	4/18/2017 - 10:43 AM
Purchasing	Mealy, Dean	Approved	4/18/2017 - 11:16 AM
Finance	sherman, randy	Approved	4/21/2017 - 3:11 PM
Attorney	Degraffenreidt, Andrew	Approved	4/24/2017 - 12:47 PM
City Clerk	Robinson, Claudene	Approved	4/24/2017 - 2:09 PM
City Manager	Evans, Jonathan	Approved	4/26/2017 - 6:05 PM

RESOLUTION NO. _____

A RESOLUTION OF THE CITY COUNCIL OF THE CITY OF RIVIERA BEACH, PALM BEACH COUNTY, FLORIDA, APPROVING THE CHILD NUTRITION PROGRAMS AGREEMENT FROM THE FLORIDA DEPARTMENT OF AGRICULTURE AND CONSUMER SERVICES FOR SUMMER MEALS PROGRAM AT RIVIERA BEACH PARKS AND RECREATION DEPARTMENT SUMMER CAMPS; AUTHORIZING THE MAYOR TO EXECUTE SAME; AND PROVIDING AN EFFECTIVE DATE.

WHEREAS, the City of Riviera Beach Parks and Recreation Department conducts summer camp each year, and

WHEREAS, good nutrition is a vital part of a child's day, and

WHEREAS, the Parks and Recreation Department has the opportunity to provide meals to participants through the Child Nutrition Programs,

NOW, THEREFORE, BE IT RESOLVED BY THE CITY COUNCIL OF THE CITY OF RIVIERA BEACH, FLORIDA THAT:

SECTION 1. The City Council approves the Child Nutrition Programs Agreement

SECTION 2. That the Mayor is authorized to execute the agreement.

SECTION 3. This Resolution shall take effect upon its passage and approval by the City Council.

PASSED AND APPROVED THIS _____ DAY OF _____, 2017.

APPROVED:

_____
THOMAS A. MASTERS
MAYOR

_____
KASHAMBA L. MILLER-ANDERSON
CHAIRPERSON

ATTEST:

_____
CLAUDENE L. ANTHONY
CERTIFIED MUNICIPAL CLERK
CITY CLERK

_____
TONYA DAVIS JOHNSON
CHAIR PRO TEM

_____
LYNNE L. HUBBARD
COUNCILPERSON

_____
DAWN S. PARDO
COUNCILPERSON

_____
TERENCE D. DAVIS
COUNCILPERSON

MOTIONED BY: _____

SECONDED BY: _____

L. HUBBARD _____

K. MILLER-ANDERSON _____

T. DAVIS JOHNSON _____

D. PARDO _____

T. DAVIS _____

REVIEWED AS TO LEGAL SUFFICIENCY

ANDREW DEGRAFFENREIDT
CITY ATTORNEY

DATE: _____

This Agreement constitutes the entire Agreement between the parties. No waiver, consent, modification, or change of terms of this Agreement shall bind either party unless in writing and signed by both parties. The Sponsor, by the signature of its authorized representative, hereby acknowledges that he/she has read this Agreement, understands it, and agrees to be bound by its terms and conditions.

_____
Signature of Authorized Official

_____
Printed Name of Authorized Official

_____
Title

_____
Date

Sign and return two (2) original copies of this Agreement to:

Florida Department of Agriculture and Consumer Services
Division of Food, Nutrition and Wellness
600 S. Calhoun Street (H2)
Tallahassee, Florida 32399

OFFICIAL USE ONLY
Florida Department of Agriculture and Consumer Services

APPROVED BY:

_____
Director of Administration

_____
Date

Florida Department of Agriculture and Consumer Services
Division of Food, Nutrition and Wellness

ADAM H. PUTNAM
COMMISSIONER

CHILD NUTRITION PROGRAMS AGREEMENT

SPONSOR NAME:	SPONSOR NUMBER:	
City of Riviera Beach	11417	
ADDRESS:	CITY:	ZIP:
1621 West Blue Heron Blvd.	Riviera Beach	33404

This is an agreement between the Florida Department of Agriculture and Consumer Services (FDACS) and the sponsor identified to participate in one or more of the following U.S. Department of Agriculture (USDA) Child Nutrition Programs administered by FDACS:

Program	Federal Regulation	CFDA
National School Lunch Program (NSLP) Afterschool Snack Program (ASP) Seamless Summer Option (SSO)	7 CFR 210, 245	10.555
School Breakfast Program (SBP)	7 CFR 220, 245	10.553
Special Milk Program (SMP)	7 CFR 215, 245	10.556
Summer Food Service Program (SFSP)	7 CFR 225	10.559
Food Distribution Program	7 CFR 250	10.550

GENERAL TERMS AND CONDITIONS

1. This Agreement shall be effective from the date the Agreement and Program Application are approved by FDACS. FDACS's performance and obligation to pay under this Agreement are contingent upon continued availability of funds appropriated by Congress for the Child Nutrition Programs and an annual appropriation by the Legislature.
2. This Agreement remains in effect until terminated by either party. At least 30 days written notice must be given to terminate this Agreement. Upon termination of this Agreement, FDACS shall make no further disbursement of funds to the sponsor in accordance with this Agreement, except to reimburse the sponsor in connection with eligible meals served on or prior to the termination of this Agreement. No termination or suspension of this Agreement shall affect the obligation of the sponsor to maintain records and to make such records available for audit.
3. The sponsor has the right to appeal decisions made by FDACS in accordance with 7 CFR 210.18(q) and 7 CFR 225.13 that affect participation in the program(s) or Claims for Reimbursement.
4. The sponsor and participating sites under its jurisdiction shall comply with all provisions of 7 CFR parts 210, 215, 220, 225, 245 and 250.

REQUIREMENTS FOR PARTICIPATION IN CHILD NUTRITION PROGRAMS

Each sponsor operating the National School Lunch Program (NSLP) or Seamless Summer Option (SSO) shall, with respect to participating sites under its jurisdiction:

1. Maintain a nonprofit school food service and observe the requirements for and limitations on the use of nonprofit school food service revenues set forth in 7 CFR §210.14 and the limitations on any competitive school food service as set forth in 7 CFR §210.11;
2. Limit its net cash resources to an amount that does not exceed 3 months average expenditures for its nonprofit school food service or such other amount as may be approved in accordance with 7 CFR §210.19(a);
3. Maintain a financial management system as prescribed under 7 CFR §210.14(c);
4. Comply with the requirements of the USDA's regulations regarding financial management (2 CFR 200, as applicable);
5. Serve lunches, during the lunch period, which meet the minimum requirements prescribed in 7 CFR §210.10;
6. Price the lunch as a unit in accordance with 7 CFR §210.10(a)(2);
7. Serve lunches free or at a reduced price to all children who are determined by the local educational agency to be eligible for such meals under 7 CFR part 245;
8. Claim reimbursement at the assigned rates only for reimbursable free, reduced price and paid lunches served to eligible children in accordance with 7 CFR part 210. Agree that the sponsor official signing the claim shall be responsible for reviewing and analyzing meal counts to ensure accuracy as specified in 7 CFR §210.8 governing claims for reimbursement. Acknowledge that failure to submit accurate claims will result in the recovery of an overclaim and may result in the withholding of payments, suspension or termination of the program as specified in 7 CFR §210.25. Acknowledge that if failure to submit accurate claims reflects embezzlement, willful misapplication of funds, theft, or fraudulent activity, the penalties specified in 7 CFR §210.26 shall apply;
9. Count the number of free, reduced price and paid reimbursable meals served to eligible children at the point of service, or through another counting system if approved by FDACS;
10. Submit Claims for Reimbursement in accordance with 7 CFR §210.8;
11. Comply with the audit regulations stated in 2 CFR 200, Subpart F – Audit Requirements, if during the organization's fiscal year, Federal funds received from all programs totals $750,000 or more;
12. Comply with the requirements of the USDA's regulations regarding nondiscrimination (7 CFR parts 15, 15a, 15b);
13. Make no discrimination against any child because of his or her eligibility for free or reduced price meals in accordance with the approved Free and Reduced Price Policy Statement;
14. Enter into an agreement to receive donated foods as required by 7 CFR part 250;
15. Maintain, in the storage, preparation and service of food, proper sanitation and health standards in conformance with all applicable State and local laws and regulations, and comply with the food safety requirements of 7 CFR §210.13;

16. Accept and use, in as large quantities as may be efficiently utilized in its nonprofit school food service, such foods as may be offered as a donation by the USDA;
17. Maintain necessary facilities for storing, preparing and serving food;
18. Upon request, make all accounts and records pertaining to its school food service available to FDACS and to the USDA, for audit or review, at a reasonable time and place. Such records shall be retained for a period of 3 years after the date of the final Claim for Reimbursement for the fiscal year to which they pertain, except that if audit findings have not been resolved, the records shall be retained beyond the 3 year period as long as required for resolution of the issues raised by the audit;
    a. For public school districts and charter schools, retain records for five (5) fiscal years in accordance with General Records Schedule GS7 for Public Schools Pre-K-12 and Adult and Career Education. This retention schedule supersedes the requirement above;
19. Maintain files of currently approved and denied free and reduced price applications which must be readily retrievable by school;
20. Directly certify children for free school meals using the Florida Direct Certification System at least three times during the school year as required by FDACS. More frequent direct certification efforts are permissible and encouraged;
21. Maintain files of the names of children currently approved for free meals through direct certification with the supporting documentation, as specified in 7 CFR §245.6(b)(5), which must be readily retrievable by school. Documentation for direct certification must include information obtained directly from the appropriate State or local agency, or other appropriate individual, as specified by the USDA, that:
    a. A child in the *Family,* as defined in 7 CFR §245.2, is receiving benefits from *SNAP, FDPIR* or *TANF,* as defined in 7 CFR §245.2; if one child is receiving such benefits, all children in that family are considered to be directly certified;
    b. The child is a homeless child as defined in 7 CFR §245.2;
    c. The child is a runaway child as defined in 7 CFR §245.2;
    d. The child is a migrant child as defined in 7 CFR §245.2;
    e. The child is a Head Start child as defined in 7 CFR §245.2; or
    f. The child is a foster child as defined in 7 CFR §245.2.
22. Retain the individual applications for free and reduced price lunches and meal supplements submitted by families for a period of 3 years after the end of the fiscal year to which they pertain or as otherwise specified under paragraph (18) of this section; and
23. No later than December 31 of each year, provide FDACS with a list of all sites under its jurisdiction in which 50 percent or more of enrolled children have been determined eligible for free or reduced price meals as of the last operating day the preceding October. FDACS may designate a month other than October for the collection of this information, in which case the list must be provided to FDACS within 60 calendar days following the end of the month designated by FDACS. In addition, each sponsor shall provide, when available for the sites under its jurisdiction, and upon the request of a sponsoring organization of day care homes of the Child and Adult Care Food Program, information on the boundaries of the

attendance areas for the sites identified as having 50 percent or more of enrolled children certified eligible for free or reduced price meals.

Each sponsor with eligible sites, as defined in 7 CFR 210.10(n)(1), that elects to serve meal supplements during afterschool care programs, shall:

1. Serve meal supplements which meet the minimum requirements prescribed in 7 CFR §210.10;
2. Price the meal supplement as a unit in accordance with 7 CFR §210.10(a)(2);
3. Serve meal supplements free or at a reduced price to all children who are determined by the sponsor to be eligible for free or reduced price school meals under 7 CFR part 245;
4. If charging for meals, the charge for a reduced price meal supplement shall not exceed 15 cents;
5. Claim reimbursement at the assigned rates only for meal supplements served in accordance with the agreement;
6. Claim reimbursement for no more than one meal supplement per child per day;
7. Comply with the audit regulations stated in 2 CFR 200, Subpart F – Audit Requirements, if during the organization's fiscal year, Federal funds received from all programs totals $750,000 or more;
8. Review each afterschool care program two times a year; the first review shall be made during the first four weeks that the site is in operation each school year, except that an afterschool care program operating year round shall be reviewed during the first four weeks of its initial year of operation, once more during its first year of operation, and twice each school year thereafter; and
9. Comply with all requirements of 7 CFR §210.9, except that, claims for reimbursement need not be based on "point of service" meal supplement counts (as required by 7 CFR 210.9(b)(9)).

Each sponsor operating the School Breakfast Program (SBP) shall, with respect to participating sites under its jurisdiction:

1. Maintain a nonprofit school food service;
2. In accordance with the financial management system established under 7 CFR §220.13(i), use all revenues received by such food service only for the operation or improvement of that food service except that facilities, equipment, and personnel support with funds provided to a sponsor under this part may be used to support a nonprofit nutrition program for the elderly, including a program funded under the Older Americans Act of 1965 (42 U.S.C. 3001 *et seq.*);
3. Revenues received by the nonprofit school food service shall not be used to purchase land or buildings or to construct buildings;
4. Limit its net cash resources to an amount that does not exceed three months average expenditure for its nonprofit school food service or such other amount as may be approved by FDACS; and
5. Observe the limitations on any competitive food service as set forth in 7 CFR §210.10 and 7 CFR §220.12;

6. Serve breakfasts which meet the minimum requirements prescribed in 7 CFR §220.8, during a period designated as the breakfast period by the site;
7. Price the breakfast as a unit in accordance with 7 CFR §220.8(a)(2);
8. Supply breakfast without cost or at reduced price to all children who are determined by the sponsor to be unable to pay the full price thereof in accordance with the free and reduced price policy statements approved under 7 CFR part 245;
9. Make no discrimination against any child because of his inability to pay the full price of the breakfasts;
10. Claim reimbursement at the assigned rates only for breakfasts served in accordance with the agreement;
11. Submit Claims for Reimbursement in accordance with 7 CFR §220.11 and procedures established by FDACS, or the USDA where applicable;
12. Comply with the audit regulations stated in 2 CFR 200, Subpart F – Audit Requirements, if during the organization's fiscal year, Federal funds received from all programs totals $750,000 or more;
13. Maintain, in the storage, preparation and service of food, proper sanitation and health standards in conformance with all applicable State and local laws and regulations, and comply with the food safety requirements in paragraph (a)(2) and paragraph (a)(3) of 7 CFR §220.7;
14. Purchase, in as large quantities as may be efficiently utilized in its nonprofit school food service, foods designated as plentiful by FDACS;
15. Accept and use, in as large quantities as may be efficiently utilized in its nonprofit school food service, such foods as may be offered as a donation by the USDA;
16. Maintain necessary facilities for storing, preparing, and serving food;
17. Maintain a financial management system as prescribed by FDACS, or the USDA where applicable;
18. Upon request, make all accounts and records pertaining to its nonprofit school food service available to FDACS, to the USDA and to the USDA's Office of Audit for audit or review at a reasonable time and place. Such records shall be retained for a period of three years after the end of the fiscal year to which they pertain, except that if audit findings have not been resolved, the records shall be retained beyond the three-year period as long as required for the resolution of the issues raised by the audit.
    a. For public school districts and charter schools, retain records for five (5) fiscal years in accordance with General Records Schedule GS7 for Public Schools Pre-K-12 and Adult and Career Education. This retention schedule supersedes the requirement above.
19. Retain documentation of free or reduced price eligibility as follows:
    a. Maintain files of currently approved and denied free and reduced price applications which must be readily retrievable by school for a period of three years after the end of the fiscal year to which they pertain; or
    b. Maintain files with the names of children currently approved for free meals through direct certification with the supporting documentation, as specified in §245.6(b)(4) of this chapter, which must be readily retrievable by school. Documentation for direct certification must include information obtained

directly from the appropriate State or local agency, or other appropriate individual, as specified by the USDA, that:

i. A child in the *Family,* as defined in 7 CFR §245.2, is receiving benefits from *SNAP, FDPIR* or *TANF,* as defined in §245.2; if one child is receiving such benefits, all children in that family are considered to be directly certified;
ii. The child is a homeless child as defined in 7 CFR §245.2;
iii. The child is a runaway child as defined in 7 CFR §245.2;
iv. The child is a migrant child as defined in 7 CFR §245.2;
v. The child is a Head Start child, as defined in 7 CFR §245.2; or
vi. The child is a foster child as defined in 7 CFR §245.2.

20. Directly certify children for free school meals using the Florida Direct Certification System at least three times during the school year as required by FDACS. More frequent direct certification efforts are permissible and encouraged; and
21. Comply with the requirements of the USDA's regulations respecting nondiscrimination (7 CFR part 15).

Each sponsor approved to participate in the Special Milk Program (SMP) shall, with respect to sites under its jurisdiction:

1. Operate a nonprofit milk service. However, sponsors may use facilities, equipment, and personnel supported with funds provided to a sponsor to support a nonprofit nutrition program for the elderly, including a program funded under the Older Americans Act of 1965 (42 U.S.C. 3001 *et seq.*).
2. If electing to provide free milk (i) serve milk free to all eligible children, at times that milk is made available to nonneedy children under the program; and (ii) make no discrimination against any needy child because of his inability to pay for the milk.
3. Comply with the requirements of the USDA's regulations respecting nondiscrimination (7 CFR part 15);
4. Claim reimbursement only for milk as defined in this part and in accordance with the provisions of 7 CFR §215.8 and 7 CFR §215.10;
5. Submit Claims for Reimbursement in accordance with 7 CFR §215.10 of this part and procedures established by FDACS or the USDA where applicable;
6. Comply with the audit regulations stated in 2 CFR 200, Subpart F – Audit Requirements, if during the organization's fiscal year, Federal funds received from all programs totals $750,000 or more;
7. Maintain a financial management system as prescribed by FDACS, or the USDA where applicable;
8. Upon request, make all records pertaining to its milk program available to FDACS and to the USDA for audit and administrative review, at any reasonable time and place. Such records shall be retained for a period of three years after the end of the fiscal year to which they pertain, except that, if audit findings have not been resolved, the records shall be retained beyond the three-year period as long as required for the resolution of the issues raised by the audit; and
9. Retain the individual applications for free milk submitted by families for a period of three years after the end of the fiscal year to which they pertain, except that, if

audit findings have not been resolved, the records shall be retained beyond the three-year period as long as required for the resolution of the issues raised by the audit.

   a. For public school districts and charter schools, retain records for five (5) fiscal years in accordance with General Records Schedule GS7 for Public Schools Pre-K-12 and Adult and Career Education. This retention schedule supersedes the requirement above.

Each sponsor approved for participation in the Summer Food Service Program (SFSP) shall:

1. Operate a nonprofit food service during the period specified, as follows:
   a. From May through September for children on school vacation;
   b. At any time of the year, in the case of sponsors administering the Program under a continuous school calendar system; or
   c. During the period from October through April, if it serves an area affected by an unanticipated school closure due to a natural disaster, major building repairs, court orders relating to school safety or other issues, labor-management disputes, or, when approved by FDACS, a similar cause.
2. For sponsors, offer meals which meet the requirements and provisions set forth in 7 CFR §225.16 during times designated as meal service periods by the sponsor, and offer the same meals to all children;
3. For all other sponsors, serve meals which meet the requirements and provisions set forth in 7 CFR §225.16 during times designated as meal service periods by the sponsor, and serve the same meals to all children;
4. Serve meals without cost to all children, except that camps may charge for meals served to children who are not served meals under the program;
5. Issue a free meal policy statement in accordance with 7 CFR §225.6(c);
6. Meet the training requirement for its administrative and site personnel, as required under 7 CFR §225.15(d)(1);
7. Claim reimbursement only for the type or types of meals specified in the agreement and served without charge to children at approved sites during the approved meal service period, except that camps shall claim reimbursement only for the type or types of meals specified in the agreement and served without charge to children who meet the program's income standards. The agreement shall specify the approved levels of meal service for the sponsor's sites if such levels are required under 7 CFR §225.6(d)(2). No permanent changes may be made in the serving time of any meal unless the changes are approved by FDACS;
8. Submit claims for reimbursement in accordance with procedures established by FDACS, and those stated in 7 CFR §225.9;
9. Comply with the audit regulations stated in 2 CFR 200, Subpart F – Audit Requirements, if during the organization's fiscal year, Federal funds received from all programs totals $750,000 or more;
10. In the storage, preparation and service of food, maintain proper sanitation and health standards in conformance with all applicable State and local laws and regulations;

11. Accept and use, in quantities that may be efficiently utilized in the program, such foods as may be offered as a donation by the USDA;
12. Have access to facilities necessary for storing, preparing, and serving food;
13. Maintain a financial management system as prescribed by FDACS;
14. Maintain on file documentation of site visits and reviews in accordance with 7 CFR §225.15(d) (2) and (3);
15. Upon request, make all accounts and records pertaining to the program available to State, Federal, or other authorized officials for audit or administrative review, at a reasonable time and place. The records shall be retained for a period of 3 years after the end of the fiscal year to which they pertain, unless audit or investigative findings have not been resolved, in which case the records shall be retained until all issues raised by the audit or investigation have been resolved
    a. For public school districts and charter schools, retain records for five (5) fiscal years in accordance with General Records Schedule GS7 for Public Schools Pre-K-12 and Adult and Career Education. This retention schedule supersedes the requirement above.
16. Submit information as required in this Program agreement that is true and correct, acknowledging that deliberate misrepresentation or withholding of information may result in prosecution under the applicable State and Federal statutes;
17. Maintain children on site while meals are consumed; and
18. Retain final financial and administrative responsibility for its program.

Each sponsor receiving donated foods under FDACS' Food Distribution Program shall:

1. Distribute and use of donated foods is in accordance with 7 CFR part 250;
2. Be responsible for reporting to FDACS for any improper distribution or use of donated foods or for any loss of, or damage to, donated foods caused by their fault or negligence;
3. Have and preserve a right to assert claims against other persons to whom donated foods are delivered for care, handling or distribution; and
4. Take action to obtain restitution in connection with claims for improper distribution, use or loss of, or damage to, donated foods.

ASSURANCE OF CIVIL RIGHTS COMPLIANCE

The sponsor hereby agrees that it will comply with Title VI of the Civil Rights Act of 1964 (42 U.S.C. 2000d et seq.), Title IX of the Education Amendments of 1972 (20 U.S.C. 1681 et seq.), Section 504 of the Rehabilitation Act of 1973 (29 U.S.C. 794), the Age Discrimination Act of 1975 (42 U.S.C. 6101 et seq.); all provisions required by the implementing regulations of the United States Department of Agriculture (USDA); Department of Justice Enforcement Guidelines, 28 CFR Part SO.3 and 42; and the Food and Nutrition Service (FNS) directives and guidelines, to the effect that, no person shall, on the grounds of race, color, national origin, age, sex, or disability, be excluded from participation in, be denied the benefits of, or otherwise be subjected to discrimination under any program or activity for which the SPONSOR receives federal financial

assistance from the USDA; and gives assurance that it will immediately take measures necessary to effectuate this Agreement.

By accepting this assurance, the sponsor agrees to compile data, maintain records, and submit reports as required to permit effective enforcement of the nondiscrimination laws and permit authorized FDACS and USDA personnel, during hours of program operation, to review such records, books, and accounts as needed to ascertain compliance with the nondiscrimination laws. If there are any violations of this assurance, the USDA, shall have the right to seek judicial enforcement of this assurance.

This assurance is binding on the sponsor, its successors, transferees, and assignees as long as it receives assistance or retains possession of any assistance from USDA. The person (or persons) whose signature(s) appear(s) below is/are authorized to sign this assurance on behalf of the sponsor.

CERTIFICATION REGARDING LOBBYING

This certification is a material representation of fact upon which reliance was placed when this transaction was made or entered into. Submission of this certification is a prerequisite for making or entering into this transaction imposed by section 1352, title 31, U.S. Code. Any person who fails to file the required certification shall be subject to a civil penalty of not less than $10,000 and not more than $100,000 for each such failure.

The undersigned sponsor certifies, to the best of his or her knowledge and belief, that:

1. No Federal appropriated-funds have been paid or will be paid, by or on behalf of the undersigned, to any person for influencing or attempting to influence an officer or employee of congress, or an employee of a member of congress in connection with the awarding of any Federal contract, the making of any Federal grant, the making of any Federal loan, the entering into of any cooperative agreement, and the extension, continuation, renewal, amendment, or modification of any Federal contract, grant, loan, or cooperative agreement.
2. If any funds other than Federal-appropriated funds have been paid or will be paid to any person for influencing or attempting to influence an officer or employee of any agency, a member of congress, an officer or employee of congress, or an employee of a member of congress in connection with this Federal contract, grant, loan, or cooperative agreement, the undersigned shall complete and submit Standard Form-LLL, Disclosure Form to Report Lobbying, in accordance with its instructions.
3. The language of this certification shall be included in the award documents for all sub-awards at all tiers (including sub-contracts, subgrants, and contracts under grants, loans and cooperative agreements) and that all sub-recipients shall certify and disclose accordingly.

CERTIFICATION REGARDING DRUG-FREE WORKPLACE

This certification is required by the regulations implementing Sections 5151-5160 of the Drug Free Workplace Act of 1988 (Pub. L. 100-690, Title V, Subtitle D; 41 U.S.C. 701 et seq.), 2 CFR Part 182. The regulations, published as Part II of the May 25, 1990 Federal Register (pages 21681-21691), require certification by grantees, prior to award, that they will maintain a drug-free workplace.

This certification is a material representation of fact upon which reliance was placed when this transaction was made or entered into. False certification or violation of the certification shall be grounds for suspension of payments, suspension or termination of grants, or suspension or debarment (see 7 CFR Part 3017, Sections 3017.615 and 3017.620).

1. The applicant certifies that it will provide a drug-free workplace by:
    a. Publishing a statement notifying employees that the unlawful manufacture, distribution, dispensing, possession, or use of a controlled substance is prohibited in the grantee's workplace and specifying the actions that will be taken against employees for violation of such prohibition.
    b. Establishing an on-going, drug-free awareness program to inform employees about:
        i. The dangers of drug abuse in the workplace
        ii. The grantee's policy of maintaining a drug-free workplace
        iii. Any available drug counseling, rehabilitation, and employee assistance programs, and
        iv. The penalties that may be imposed upon employees for drug abuse violations occurring in the workplace.
    c. Requiring that each employee engaged in the performance of the grant be given a copy of the statement required by paragraph (a).
    d. Notifying the employee in the statement required by paragraph (a) that, as a condition of employment under the grant, the employee will:
        i. Abide by the terms of the statement.
        ii. Notify the employer in writing of his or her conviction for a violation of a criminal drug statute occurring in the workplace no later than five calendar days after such conviction.
    e. Notifying the agency in writing, within 10 calendar days after receiving notice under subparagraph (d)(2) from an employee or otherwise receiving actual notice of such conviction. Employers of convicted employees must provide notice, including position title, to every grant officer or other designee. Notice shall include the identification number(s) of each affected grant.
    f. Taking one of the following actions, within 30 calendar days of receiving notice under subparagraph (d)(2), with respect to any employee who is so convicted:
        i. Taking appropriate personnel action against such an employee, up to and including termination, consistent with the requirements of the Rehabilitation Act of 1973, as amended; or

ii. Requiring such employee to participate satisfactorily in a drug abuse assistance or rehabilitation program approved for such purposes by a federal, state, or local health, law enforcement, or other appropriate agency.

g. Making a good faith effort to continue to maintain a drug-free workplace through implementation of paragraphs (a), (b), (c), (d), (e), and (f).

2. The grantee may insert in the space provided below the site(s) for the performance of work done in connection with the specific grant:

Place of Performance (street address, city, county, state, zip code):

Wells Recreation Complex 2409 Ave "H" West Riviera Beach, FL. 33404

Tate Recreation Complex 1420 W. 10th St. Riviera Beach, FL. 33404

Check ☐ if there are workplaces on file that are not identified here.

CERTIFICATION REGARDING DEBARMENT, SUSPENSION, AND OTHER MATTERS – PRIMARY COVERED TRANSACTIONS

This certification is required by the regulations implementing Executive Order 12549, Debarment and Suspension, 2 CFR Part 180, Subpart C, Responsibilities of Participants Regarding Transactions Doing Business with Other Persons. Copies of the regulations may be obtained by contacting the Department of Agriculture agency offering the proposed covered transaction.

1. The prospective primary participant [Sponsor] certifies to the best of its knowledge and belief, that it and its principals:
   a. are not presently debarred, suspended, proposed for debarment, declared ineligible, or voluntarily excluded from covered transactions by any Federal department or agency;
   b. have not within a three-year period preceding this proposal been convicted of or had a civil judgment rendered against them for commission of fraud or a criminal offense in connection with obtaining, attempting to obtain, or performing a public (Federal, State or local) transaction or contract under a public transaction; violation of Federal or State antitrust statutes or commission of embezzlement, theft, forgery, bribery, falsification or destruction of records, making false statements, or receiving stolen property;
   c. are not presently indicted for or otherwise criminally or civilly charged by a governmental entity (Federal, State or local) with commission of any of the offenses enumerated in paragraph (1)(b) of this certification; and
   d. have not within a three-year period preceding this application/proposal had one or more public transactions (Federal, State or local) terminated for cause or default.

2. Where the prospective primary participant [Sponsor] is unable to certify to any of the statements in this certification, such prospective participant shall attach an explanation to this agreement.

CITY OF RIVIERA BEACH CITY COUNCIL
AGENDA ITEM SUMMARY

Meeting Date: 5/3/2017

Agenda Category: CONSENT RESOLUTION

Subject: A resolution approving Amendment Number One to Agreement Number R2017-0062 with Palm Beach County for the resurfacing of West 15th Street to West 17th Street utilizing Community Development Block Grant funds; authorizing the Mayor and City Clerk to execute the Amendment.

Recommendation/Motion: Staff recommends that the City Council approve the resolution.

Originating Dept	Public Works	**Costs**	$0.00
User Dept.	Public Works	**Funding Source**	
Advertised	No	**Budget Account Number**	**Fund 000 Dept/Division 0000 Org. 000 Object 0 Reporting Category: 0000**
Date			
Paper			
Affected Parties	Not Required		

Background/Summary:

On January 10, 2017, the City entered into agreement No. R2017-0062 with Palm Beach County to receive Community Development Block Grant Funds (CDBG) for milling and resurfacing of West 15th Street to West 17th Street and Avenue S south of Blue Heron Boulevard.

The Florida Department of Transportation (FDOT) is planning to perform work at the intersection of Avenue S and Blue Heron Boulevard in the near future that will encroach upon the planned construction limits for the City's project south of Blue Heron on Avenue S. As a result of this construction limit conflict Palm Beach County requested that the City approve amendment number one which removes approximately 100 linear feet from the construction limits on Avenue S as well as extending the project deadline from March 1, 2017 to March 31, 2018. None of the proposed amendment changes affects the anticipated funding allocation from Palm Beach County.

Staff requests that City Council approve the resolution approving amendment number one between the City and Palm Beach County.

Fiscal Years	2017	2018	2019	2020	2021
Capital Expenditures	$0.00				
Operating Costs	$0.00	$0.00	$0.00	$0.00	$0.00
External Revenues	$200,892				
Program Income (city)	NA				
In-kind Match (city)	NA				
Net Fiscal Impact	$0.00	$0.00	$0.00	$0.00	$0.00
NO. Additional FTE Positions (cumulative)	N/A				

III. Review Comments

A. Finance Department Comments:

B. Purchasing/Intergovernmental Relations/Grants Comments:

C. Department Director Review:

Contract Start Date

Contract End Date

Renewal Start Date

Renewal End Date

Number of 12 month terms this renewal

Dollar Amount

Contractor Company Name

Contractor Contact

Contractor Address

Contractor Phone Number

Contractor Email

Type of Contract

Describe

ATTACHMENTS:

File Name	Description	Upload Date	Type
Resolution_-_Amendment_No__1.doc	Resolution	4/17/2017	Resolution
Amendment_001.pdf	Amendment No 1	4/17/2017	Agreement

REVIEWERS:

Department	Reviewer	Action	Date
Public Works	Johnson, Brynt	Approved	4/17/2017 - 4:53 PM

Finance	sherman, randy	Approved	4/21/2017 - 3:05 PM
Attorney	Degraffenreidt, Andrew	Approved	4/24/2017 - 12:48 PM
City Clerk	Robinson, Claudene	Approved	4/24/2017 - 1:56 PM
City Manager	Evans, Jonathan	Approved	4/26/2017 - 6:09 PM

RESOLUTION NO. _____

A RESOLUTION OF THE CITY COUNCIL OF THE CITY OF RIVIERA BEACH, PALM BEACH COUNTY, FLORIDA, APPROVING AMENDMENT NUMBER ONE TO AGREEMENT NUMBER R2017-0062 WITH PALM BEACH COUNTY FOR THE RESURFACING OF WEST 15TH STREET TO WEST 17TH STREET UTILIZING COMMUNITY DEVELOPMENT BLOCK GRANT FUNDS; AUTHORIZING THE MAYOR AND CITY CLERK TO EXECUTE THE AMENDMENT; AND PROVIDING AN EFFECTIVE DATE.

WHEREAS, on January 10, 2017 the City entered into agreement with Palm Beach County for receiving funds under the Community Development Block Grant Program; and

WHEREAS, the City is required to amend agreement number R2017-0062 due to the Florida Department of Transportation performing work within the City's proposed project boundaries; and

WHEREAS, amendment number one will remove approximately 100 linear feet from the City's construction limits south of Blue Heron on Avenue S and will extent to project completion date from March 1, 2018 to March 31, 2018.

NOW, THEREFORE, BE IT RESOLVED BY THE CITY COUNCIL OF THE CITY OF RIVIERA BEACH, PALM BEACH COUNTY, FLORIDA as follows:

SECTION 1. The City Council hereby approves amendment number one between the City of Riviera Beach and Palm Beach County to remove approximately 100 liner feet from the construction limits and extending the project completion date from March 1, 2018 to March 31, 2018.

SECTION 2. The Mayor and City Clerk are authorized to execute the Agreement.

SECTION 3. That the Resolution take effect upon its passage and approval by City Council.

PASSED and APPROVED this _____ day of _____, 2017.

APPROVED:

_____
THOMAS A. MASTERS
MAYOR

_____
KaSHAMBA MILLER-ANDERSON
CHAIRPERSON

ATTEST:

_____
CLAUDENE L. ANTHONY
CERTIFIED MUNICIPAL CLERK
CITY CLERK

_____
TONYA DAVIS JOHNSON
CHAIR PRO TEM

_____
LYNNE L. HUBBARD
COUNCILPERSON

_____
TONYA DAVIS JOHNSON
COUNCILPERSON

_____
TERENCE D. DAVIS
COUNCILPERSON

MOTIONED BY: _____

SECONDED BY: _____

L. HUBBARD _____

K. MILLER-ANDERSON _____

T. DAVIS JOHNSON _____

D. PARDO _____

T. DAVIS _____

REVIEWED AS TO LEGAL SUFFICIENCY

ANDREW DEGRAFFENREIDT
CITY ATTORNEY

DATE: _____

AMENDMENT 001 TO THE AGREEMENT
WITH
CITY OF RIVIERA BEACH

Amendment 001 entered into on _____, by and between **Palm Beach County** and the **City of Riviera Beach.**

W I T N E S S E T H:

WHEREAS, Palm Beach County entered into an Agreement (R2017-0062) with the City of Riviera Beach on January 10, 2017, to provide $154,063 in Community Development Block Grant (CDBG) funds for roadway improvements including roadway reconstruction and resurfacing and sidewalks along West 15th Street to West 17th Street and Avenue S between Blue Heron Blvd south to West 15th Street,; and

WHEREAS, the City has requested to modify the original Agreement to revise the scope of work to delete work to be undertaken by FDOT in the original project area, revise the monthly performance requirements and extend the agreement date, and

WHEREAS, both parties desire to modify the original Agreement in accordance with the terms and conditions set forth herein; and

NOW, THEREFORE, in consideration of the mutual covenants and agreements hereinafter set forth, and various other good and valuable consideration, the receipt and sufficiency of which are hereby acknowledged, the parties hereto agree as follows:

A. INCORPORATION OF RECITALS
The foregoing recitals are true and correct and incorporated herein by reference. Terms not defined herein shall have the same meaning as ascribed to them in the Agreement.

B. SECTION 6 - MAXIMUM COMPENSATION
Replace "March 1, 2018" with "March 31, 2018".

C. SECTION 7 - TIME OF PERFORMANCE
Replace "March 1, 2018" with "March 31, 2018".

D. EXHIBIT A - WORK PROGRAM NARRATIVE: SECTION 1.A: PROFESSIONAL SERVICES
Add the following language to end of the Section:
"The project scope of work and limits of construction shall remove the last 100 feet south of Blue Heron on Avenue S. FDOT will be reconstructing this area based on Project #435144-1-52-01".

E. EXHIBIT A - WORK PROGRAM NARRATIVE: SECTION 1.H: MONTHLY PERFORMANCE REQUIREMENTS
Delete the current language and replace with the following:

"The time frame for completion of the outlined activities shall be March 31, 2018. The Municipality shall meet these performance requirements by the timely performance, documentation, and completion of the following tasks:

Advertise & Accept Bids by	May 15, 2017
Start Construction by	July 1, 2017
Complete Construction by	January 1, 2018
Submit Final Reimbursement Request by	February 1, 2018"

Except as modified by this Amendment 001, the Agreement remains unmodified and in full force and effect in accordance with the terms thereof. This Amendment 001 is expressly contingent upon the approval of the County and shall become effective only when signed by all parties.

IN WITNESS WHEREOF, Municipality and County have caused this Amendment 001 to be executed on the date first above written.

(MUNICIPALITY SEAL BELOW)

CITY OF RIVIERA BEACH

By: _____
Thomas Masters, Mayor

By: _____
Claudene L. Anthony, City Clerk

By: _____
Attorney for Municipality
(Signature Optional)

(COUNTY SEAL BELOW)

PALM BEACH COUNTY, FLORIDA, a Political Subdivision of the State of Florida

BOARD OF COUNTY COMMISSIONERS

By: _____
Paulette Burdick, Mayor
Palm Beach County

ATTEST: Sharon R. Bock,
Clerk & Comptroller

By: _____
Deputy Clerk

Document No.: _____

Approved as to Form and
Legal Sufficiency

By:_____
James Brako,
Assistant County Attorney

Approved as to Terms and Conditions
Department of Economic Sustainability

By:_____
Sherry Howard,
Deputy Director

Z:\CDBG\FY 2016-17\RivieraBeach_15th to 18th St\Amend 001 - Scope of Work.docx

CITY OF RIVIERA BEACH CITY COUNCIL
AGENDA ITEM SUMMARY

Meeting Date: 5/3/2017

Agenda Category: REGULAR RESOLUTION

Subject: A resolution authorizing the purchase of a new 114SD Freightliner Cab and Chassis from Lou Bachrodt Freightliner in the amount of $101,988 and a Vac-Con sewer body model V311HN/1000 From Southern Sewer Equipment in the amount of $316,022.20 by piggybacking the Florida Sheriffs Association Contract number FSA16-VEH14.0 specification #14 and #51; authorizing the Director of Finance and Administrative Services to make payment for same from account number 460-1127-541-0-6402.

Recommendation/Motion: Staff recommends that the City Council approve the attached resolution.

Originating Dept	Public Works	**Costs**	$418,010.20
User Dept.	Public Works	**Funding Source**	
Advertised	No	**Budget Account Number**	Fund 460 Dept/Division 1127 Org. 541 Object 0 Reporting Category: 6402
Date			
Paper			
Affected Parties	Not Required		

Background/Summary:

The Public Works Stormwater Division is in need of a new vacuum suction truck to replace the existing unit. The existing vacuum truck is approximately 12 years old and has incurred substantial repair costs and continues to incur costs. The frequent repairs not only affect the division monetarily, but the unit being down also decreases the division's overall efficiency and productivity. Repair and maintenance costs over the past two (2) years total approximately $61,600 which include, but are not limited to $907.22 on valve body and hose reel repair, $5,000 on a radiator and oil leak, $866.19 on a header box and instrument panel, and $45,522.52 on a complete overhaul.

The purpose of a vacuum suction truck is to suction out debris and sedimentation built up in storm drains and maintenance access structures throughout the city which total approximately 1,700 structures. It is also used to unclog and clean any storm drain pipes to ensure proper stormwater flow through the drainage network system and to respective outfalls. In addition to cleaning the system for maintenance purposes, the unit is also used to clean drainage lines so that drainage pipes can be televised to find defects in the system. The vacuum truck is also an essential piece of equipment that is required in order to stay in compliance with the guidelines set forth by the Department of Environmental Protection through its National Pollutant Discharge Elimination System (NPDES) program.

Staff requests that City Council approve the purchase of a new 114SD Freightliner Cab and Chassis from Lou Bachrodt Freightliner in the amount of $101,988 and a Vac-Con sewer body model V311HN/1000 from Southern Sewer Equipment in the amount of $316,022.20 by piggybacking the Florida Sheriffs Association Contract number FSA16-VEH14.0 specification #14 and #51. After purchase and receipt of the new vacuum truck unit, Public

Works plans to dispose of the current unit which has an estimated resale value of approximately $80,000-$100,000.

Fiscal Years	2017	2018	2019	2020	2021
Capital Expenditures	$418,010.20				
Operating Costs	$0.00	$0.00	$0.00	$0.00	$0.00
External Revenues	$0.00				
Program Income (city)	NA				
In-kind Match (city)	NA				
Net Fiscal Impact	$418,010.20	$0.00	$0.00	$0.00	$0.00
NO. Additional FTE Positions (cumulative)					

III. Review Comments

A. Finance Department Comments:

B. Purchasing/Intergovernmental Relations/Grants Comments:

C. Department Director Review:

Contract Start Date

Contract End Date

Renewal Start Date

Renewal End Date

Number of 12 month terms this renewal

Dollar Amount

Contractor Company Name

Contractor Contact

Contractor Address

Contractor Phone Number

Contractor Email

Type of Contract

Describe

ATTACHMENTS:

File Name	Description	Upload Date	Type
RESOLUTION_TO_PURCHASE_Vac_Truck_-_revised_12-18-15_(003).doc	Resolution	3/9/2017	Resolution
Riviera_Beach_FSA_Bachrodt_Freightliner_tandem_chassis_quote_(Feb_16_201___.pdf	Lou Bachrodt Proposal	3/9/2017	Backup Material
Riviera_Beach_FSA_V311LHAE1300_Revised_(Feb__20_2017).pdf	Southern Sewer Proposal	3/9/2017	Backup Material

REVIEWERS:

Department	Reviewer	Action	Date
Public Works	Johnson, Brynt	Approved	4/6/2017 - 3:56 PM
Purchasing	Mealy, Dean	Approved	4/7/2017 - 10:18 AM
Finance	Hoskins, Karen	Approved	4/7/2017 - 2:10 PM
Attorney	Degraffenreidt, Andrew	Approved	4/10/2017 - 11:52 AM
City Clerk	Robinson, Claudene	Approved	4/10/2017 - 11:58 AM
City Manager	Jones, Danny	Approved	4/12/2017 - 7:24 PM

RESOLUTION NO. _____

A RESOLUTION OF THE CITY COUNCIL OF THE CITY OF RIVIERA BEACH, PALM BEACH COUNTY, FLORIDA, AUTHORIZING THE PURCHASE AND DELIVERY OF A NEW 114SD FREIGHTLINER CAB AND CHASSIS FROM LOU BACHRODT FREIGHTLINER IN THE AMOUNT OF $101,988.00, AND A VAC-CON SEWER BODY MODEL V311HN/1000 FROM SOUTHERN SEWER EQUIPMENT SALES IN THE AMOUNT OF $316,022.20 BY PIGGYBACKING THE FLORIDA SHERIFFS ASSOCIATION CONTRACT NUMBER FSA16-VEH14.0 SPECIFICATION #14 AND #51; AUTHORIZING THE DIRECTOR OF FINANCE AND ADMINISTRATIVE SERVICES TO MAKE PAYMENT FOR SAME FROM ACCOUNT NUMBER 460-1127-541-0-6402 FOR THE PURCHASE IN THE AMOUNT OF $418,010.20; AND PROVIDING AN EFFECTIVE DATE.

WHEREAS, the department currently has an Aqua-tech vacuum truck to perform regularly scheduled maintenance and emergency activities related to the city's storm water system, and

WHEREAS, the existing Aquatech vacuum truck requires ongoing and expensive repairs which have totaled $56,651.61 over the last two years, and

WHEREAS, the Department desires to purchase a new 114SD Freightliner cab and chassis on which the Vac-Con sewer body model V311HN/1000 suction unit will be mounted, and

WHEREAS, the purchase of this truck will ensure that proper care and scheduled maintenance of the city's storm water infrastructure is continued without delays due to equipment malfunctions.

NOW, THEREFORE, BE IT RESOLVED BY THE CITY COUNCIL OF THE CITY OF RIVIERA BEACH, PALM BEACH COUNTY, FLORIDA as follows:

SECTION 1. That the City Council authorizes the purchase of a new 2018 Freightliner Cab and Chassis from Lou Bachrodt Freightliner of Pompano Beach, Florida and Vac-Con sewer body Unit Model V311HN/1000 from Southern Sewer Equipment of Ft. Pierce, Florida by piggybacking the Florida Sheriffs Association Contract number FSA16-VEH14.0 Specification #14 and #51.

.

SECTION 2. The Director of Finance and Administrative Services is authorized to make payment for same from account number 460-1127-541-0-0000 in the amount of $418,010.20.

<u>SECTION 3.</u> That the Resolution take effect upon its passage and approval by City Council.

PASSED and APPROVED this _____ day of _____, 2017.

APPROVED:

_____
THOMAS A. MASTERS
MAYOR

_____
TERENCE D. DAVIS
CHAIRPERSON

ATTEST:

_____
CLAUDENE L. ANTHONY
CERTIFIED MUNICIPAL CLERK
CITY CLERK

_____
KASHAMBA MILLER-ANDERSON
CHAIR PRO TEM

_____
LYNNE L. HUBBARD
COUNCILPERSON

_____
TONYA DAVIS JOHNSON
COUNCILPERSON

_____
DAWN S. PARDO
COUNCILPERSON

MOTIONED BY: _____

SECONDED BY: _____

L. HUBBARD _____

K. MILLER-ANDERSON _____

T. DAVIS JOHNSON _____

D. PARDO _____

T. DAVIS _____

REVIEWED AS TO LEGAL SUFFICIENCY

ANDREW DEGRAFFENREIDT
CITY ATTORNEY

DATE: _____

Prepared by:
Drew Ellison
LOU BACHRODT FREIGHTLINER
2840 CENTER PORT CIRCLE
POMPANO BEACH, FL 33064
Phone: 407-886-6704

R I V I E R A B E A C H V A C C O N C H A S S I S

Q U O T A T I O N

114SD CONVENTIONAL CHASSIS

SET FORWARD AXLE - TRUCK
CUM L9 370 HP @ 2000 RPM, 2100 GOV RPM, 1250 LB/FT @ 1400 RPM
ALLISON 3000 RDS AUTOMATIC TRANSMISSION WITH PTO PROVISION
RT-46-160 46,000# R-SERIES TANDEM REAR AXLE
HENDRICKSON RT463 REAR SUSPENSION @ 46,000#
DETROIT DA-F-20.0-5 20,000# FL1 71.0 KPI/3.74 DROP SINGLE FRONT AXLE
20,000# FLAT LEAF FRONT SUSPENSION
114 INCH BBC FLAT ROOF ALUMINUM CONVENTIONAL CAB
6850MM (270 INCH) WHEELBASE
7/16X3-9/16X11-1/8 INCH STEEL FRAME (11.11MMX282.6MM/0.437X11.13 INCH) 120KSI
1900MM (75 INCH) REAR FRAME OVERHANG
1/4 INCH (6.35MM) C-CHANNEL INNER FRAME REINFORCEMENT

		PER UNIT	TOTAL
VEHICLE PRICE	**TOTAL # OF UNITS (1)**	$	$
EXTENDED WARRANTY		$	$
DEALER INSTALLED OPTIONS		$	$
CUSTOMER PRICE BEFORE TAX		**$**	**$**

TAXES AND FEES

TAXES AND FEES	$	$
OTHER CHARGES	$	$

TRADE-IN

TRADE-IN ALLOWANCE	$ (0)	$	(0)
BALANCE DUE	**(LOCAL CURRENCY)** **$ 101,988.00**	**$**	**101,988.00**

COMMENTS:
Projected delivery on ___ / ___ / ___ provided the order is received before ___ / ___ / ___.

APPROVAL:
Please indicate your acceptance of this quotation by signing below:

Customer: X_____ Date: ___ / ___ / ___.

Daimler Truck Financial
Financing that works for you.

See your local dealer for a competitive quote from Daimler Truck Financial, or contact us at Information@dtfoffers.com.
Daimler Truck Financial offers a variety of finance, lease and insurance solutions to fit your business needs. For more information about our products and services, visit our website at www.daimler-truckfinancial.com.

Prepared by:
Drew Ellison
LOU BACHRODT FREIGHTLINER
2840 CENTER PORT CIRCLE
POMPANO BEACH, FL 33064
Phone: 407-886-6704

S P E C I F I C A T I O N P R O P O S A L

Data Code	Description
Price Level	
PRL-14D	SD PRL-14D (EFF:10/05/15)
Data Version	
DRL-011	SPECPRO21 DATA RELEASE VER 011
Vehicle Configuration	
001-177	114SD CONVENTIONAL CHASSIS
004-218	2018 MODEL YEAR SPECIFIED
002-003	SET FORWARD AXLE - TRUCK
019-002	STRAIGHT TRUCK PROVISION
003-001	LH PRIMARY STEERING LOCATION
General Service	
AA1-002	TRUCK CONFIGURATION
AA6-001	DOMICILED, USA 50 STATES (INCLUDING CALIFORNIA AND CARB OPT-IN STATES)
A85-010	UTILITY/REPAIR/MAINTENANCE SERVICE
A84-1GM	GOVERNMENT BUSINESS SEGMENT
AA4-002	LIQUID BULK COMMODITY
AA5-006	TERRAIN/DUTY: 10% (SOME) OF THE TIME, IN TRANSIT, IS SPENT ON NON-PAVED ROADS
AB1-008	MAXIMUM 8% EXPECTED GRADE
AB5-003	MAINTAINED GRAVEL OR CRUSHED ROCK - MOST SEVERE IN-TRANSIT (BETWEEN SITES) ROAD SURFACE
995-1AE	FREIGHTLINER LEVEL II WARRANTY
A66-99D	EXPECTED FRONT AXLE(S) LOAD : 20000.0 lbs
A68-99D	EXPECTED REAR DRIVE AXLE(S) LOAD : 46000.0 lbs
A63-99D	EXPECTED GROSS VEHICLE WEIGHT CAPACITY : 66000.0 lbs
Truck Service	
AA3-034	SEWER/INDUSTRIAL VACUUM BODY

Prepared by:
Drew Ellison
LOU BACHRODT FREIGHTLINER
2840 CENTER PORT CIRCLE
POMPANO BEACH, FL 33064
Phone: 407-886-6704

Data Code	Description
Engine	
101-22V	CUM L9 370 HP @ 2000 RPM, 2100 GOV RPM, 1250 LB/FT @ 1400 RPM
Electronic Parameters	
79A-072	72 MPH ROAD SPEED LIMIT
79B-000	CRUISE CONTROL SPEED LIMIT SAME AS ROAD SPEED LIMIT
79K-009	PTO MODE ENGINE RPM LIMIT - 1200 RPM
79L-011	PTO MODE THROTTLE OVERRIDE - LIMIT TO 1400 RPM
79M-001	PTO MODE BRAKE OVERRIDE - SERVICE BRAKE APPLIED
79P-009	PTO RPM WITH CRUISE SET SWITCH - 1200 RPM
79Q-009	PTO RPM WITH CRUISE RESUME SWITCH - 1200 RPM
79S-001	PTO MODE CANCEL VEHICLE SPEED - 5 MPH
79U-006	PTO GOVERNOR RAMP RATE - 200 RPM PER SECOND
79W-002	TWO REMOTE PTO SPEEDS
79X-001	REMOTE PTO SPEED 1 SETTING - 700 RPM
79Y-001	REMOTE PTO SPEED 2 SETTING - 900 RPM
80G-002	PTO MINIMUM RPM - 700
80J-002	REGEN INHIBIT SPEED THRESHOLD - 5 MPH
Engine Equipment	
99C-017	2016 ONBOARD DIAGNOSTICS/2010 EPA/CARB/FINAL GHG17 CONFIGURATION
99D-011	2008 CARB EMISSION CERTIFICATION - CLEAN IDLE (INCLUDES 6X4 INCH LABEL ON LOWER FORWARD CORNER OF DRIVER DOOR)
PMT-998	NO 2013 ENGINE ESCALATOR
13E-001	STANDARD OIL PAN
105-001	ENGINE MOUNTED OIL CHECK AND FILL
014-1B5	SIDE OF HOOD AIR INTAKE WITH DONALDSON HIGH CAPACITY AIR CLEANER WITH SAFETY ELEMENT, FIREWALL MOUNTED
124-1D7	DR 12V 160 AMP 28-SI QUADRAMOUNT PAD ALTERNATOR WITH REMOTE BATTERY VOLT SENSE
292-098	(2) ALLIANCE MODEL 1231, GROUP 31, 12 VOLT MAINTENANCE FREE 2250 CCA THREADED STUD BATTERIES

Prepared by:
Drew Ellison
LOU BACHRODT FREIGHTLINER
2840 CENTER PORT CIRCLE
POMPANO BEACH, FL 33064
Phone: 407-886-6704

Data Code	Description
290-017	BATTERY BOX FRAME MOUNTED
281-001	STANDARD BATTERY JUMPERS
282-042	LH BATTERY BOX MOUNTED AS FAR AFT AS POSSIBLE, NO GREATER THAN 60 INCHES BACK OF CAB
291-017	WIRE GROUND RETURN FOR BATTERY CABLES WITH ADDITIONAL FRAME GROUND RETURN
289-001	NON-POLISHED BATTERY BOX COVER
293-060	POSITIVE LOAD DISCONNECT WITH CAB MOUNTED CONTROL SWITCH WITH LOCKING PROVISION MOUNTED OUTBOARD DRIVER SEAT
295-029	POSITIVE AND NEGATIVE POSTS FOR JUMPSTART LOCATED ON FRAME NEXT TO STARTER
107-032	CUMMINS TURBOCHARGED 18.7 CFM AIR COMPRESSOR WITH INTERNAL SAFETY VALVE
152-041	ELECTRONIC ENGINE INTEGRAL SHUTDOWN PROTECTION SYSTEM
016-1C2	RH OUTBOARD UNDER STEP MOUNTED HORIZONTAL AFTERTREATMENT SYSTEM ASSEMBLY WITH RH B-PILLAR MOUNTED VERTICAL TAILPIPE
28F-002	ENGINE AFTERTREATMENT DEVICE, AUTOMATIC OVER THE ROAD REGENERATION AND DASH MOUNTED REGENERATION REQUEST SWITCH
239-200	INTEGRATED STACK AND B-PILLAR PIPE WITH MINIMUM STACK PROTRUSION ABOVE CAB
237-1CR	RH CURVED VERTICAL TAILPIPE B-PILLAR MOUNTED ROUTED FROM STEP
23U-001	6 GALLON DIESEL EXHAUST FLUID TANK
30N-003	100 PERCENT DIESEL EXHAUST FLUID FILL
23Y-001	STANDARD DIESEL EXHAUST FLUID PUMP MOUNTING
43X-002	LH MEDIUM DUTY STANDARD DIESEL EXHAUST FLUID TANK LOCATION
43Y-001	STANDARD DIESEL EXHAUST FLUID TANK CAP
242-011	ALUMINUM AFTERTREATMENT DEVICE/MUFFLER/TAILPIPE SHIELD(S)
273-018	HORTON DRIVEMASTER ADVANTAGE ON/OFF FAN DRIVE
276-001	AUTOMATIC FAN CONTROL WITHOUT DASH SWITCH, NON ENGINE MOUNTED
110-003	CUMMINS SPIN ON FUEL FILTER
118-008	COMBINATION FULL FLOW/BYPASS OIL FILTER

Prepared by:
Drew Ellison
LOU BACHRODT FREIGHTLINER
2840 CENTER PORT CIRCLE
POMPANO BEACH, FL 33064
Phone: 407-886-6704

Data Code	Description
120-009	FLEETGUARD PLAIN COOLANT FILTER
266-017	1300 SQUARE INCH ALUMINUM RADIATOR
103-039	ANTIFREEZE TO -34F, OAT (NITRITE AND SILICATE FREE) EXTENDED LIFE COOLANT
171-007	GATES BLUE STRIPE COOLANT HOSES OR EQUIVALENT
172-001	CONSTANT TENSION HOSE CLAMPS FOR COOLANT HOSES
270-016	RADIATOR DRAIN VALVE
360-016	1310 ADAPTER FLANGE FOR FRONT PTO PROVISION
132-004	ELECTRIC GRID AIR INTAKE WARMER
155-058	DELCO 12V 38MT HD STARTER WITH INTEGRATED MAGNETIC SWITCH
Transmission	
342-582	ALLISON 3000 RDS AUTOMATIC TRANSMISSION WITH PTO PROVISION
Transmission Equipment	
343-339	ALLISON VOCATIONAL PACKAGE 223 - AVAILABLE ON 3000/4000 PRODUCT FAMILIES WITH VOCATIONAL MODELS RDS, HS, MH AND TRV
84B-012	ALLISON VOCATIONAL RATING FOR ON/OFF HIGHWAY APPLICATIONS AVAILABLE WITH ALL PRODUCT FAMILIES
84C-023	PRIMARY MODE GEARS, LOWEST GEAR 1, START GEAR 1, HIGHEST GEAR 6, AVAILABLE FOR 3000/4000 PRODUCT FAMILIES ONLY
84D-023	SECONDARY MODE GEARS, LOWEST GEAR 1, START GEAR 1, HIGHEST GEAR 6, AVAILABLE FOR 3000/4000 PRODUCT FAMILIES ONLY
84E-000	PRIMARY SHIFT SCHEDULE RECOMMENDED BY DTNA AND ALLISON, THIS DEFINED BY ENGINE AND VOCATIONAL USAGE
84F-000	SECONDARY SHIFT SCHEDULE RECOMMENDED BY DTNA AND ALLISON, THIS DEFINED BY ENGINE AND VOCATIONAL USAGE
84G-000	PRIMARY SHIFT SPEED RECOMMENDED BY DTNA AND ALLISON, THIS DEFINED BY ENGINE AND VOCATIONAL USAGE
84H-000	SECONDARY SHIFT SPEED RECOMMENDED BY DTNA AND ALLISON, THIS DEFINED BY ENGINE AND VOCATIONAL USAGE

Prepared by:
Drew Ellison
LOU BACHRODT FREIGHTLINER
2840 CENTER PORT CIRCLE
POMPANO BEACH, FL 33064
Phone: 407-886-6704

Data Code	Description
84L-000	LOAD BASED SHIFT SCHEDULE AND VEHICLE ACCELERATION CONTROL RECOMMENDED BY DTNA AND ALLISON, THIS DEFINED VOCATIONAL USAGE
84U-000	DRIVER SWITCH INPUT - DEFAULT - NO SWITCHES
353-022	VEHICLE INTERFACE WIRING CONNECTOR WITHOUT BLUNT CUTS, AT BACK OF CAB
34C-001	ELECTRONIC TRANSMISSION CUSTOMER ACCESS CONNECTOR FIREWALL MOUNTED
341-018	MAGNETIC PLUGS, ENGINE DRAIN, TRANSMISSION DRAIN, AXLE(S) FILL AND DRAIN
345-003	PUSH BUTTON ELECTRONIC SHIFT CONTROL, DASH MOUNTED
97G-004	TRANSMISSION PROGNOSTICS - ENABLED 2013
370-015	WATER TO OIL TRANSMISSION COOLER, IN RADIATOR END TANK
346-003	TRANSMISSION OIL CHECK AND FILL WITH ELECTRONIC OIL LEVEL CHECK
35T-001	SYNTHETIC TRANSMISSION FLUID (TES-295 COMPLIANT)
Front Axle and Equipment	
400-1BB	DETROIT DA-F-20.0-5 20,000# FL1 71.0 KPI/3.74 DROP SINGLE FRONT AXLE
402-030	MERITOR 16.5X6 Q+ CAST SPIDER CAM FRONT BRAKES, DOUBLE ANCHOR, FABRICATED SHOES
403-002	NON-ASBESTOS FRONT BRAKE LINING
419-023	CONMET CAST IRON FRONT BRAKE DRUMS
427-001	FRONT BRAKE DUST SHIELDS
409-021	SKF SCOTSEAL PLUS XL FRONT OIL SEALS
408-001	VENTED FRONT HUB CAPS WITH WINDOW, CENTER AND SIDE PLUGS - OIL
416-022	STANDARD SPINDLE NUTS FOR ALL AXLES
405-002	MERITOR AUTOMATIC FRONT SLACK ADJUSTERS
406-001	STANDARD KING PIN BUSHINGS
536-055	TRW THP-60 POWER STEERING WITH RCH45 AUXILIARY GEAR
539-003	POWER STEERING PUMP
534-003	4 QUART POWER STEERING RESERVOIR
533-004	OIL/AIR POWER STEERING COOLER MOUNTED ABOVE FRONT CLOSING CROSSMEMBER

Prepared by:
Drew Ellison
LOU BACHRODT FREIGHTLINER
2840 CENTER PORT CIRCLE
POMPANO BEACH, FL 33064
Phone: 407-886-6704

Data Code	Description
40T-002	SYNTHETIC 75W-90 FRONT AXLE LUBE
Front Suspension	
620-006	20,000# FLAT LEAF FRONT SUSPENSION
619-004	GRAPHITE BRONZE BUSHINGS WITH SEALS - FRONT SUSPENSION
410-001	FRONT SHOCK ABSORBERS
Rear Axle and Equipment	
420-103	RT-46-160 46,000# R-SERIES TANDEM REAR AXLE
421-538	5.38 REAR AXLE RATIO
424-001	IRON REAR AXLE CARRIER WITH STANDARD AXLE HOUSING
386-076	MXL 17N MERITOR EXTENDED LUBE MAIN DRIVELINE WITH FULL ROUND YOKES
388-073	MXL 17T MERITOR EXTENDED LUBE INTERAXLE DRIVELINE WITH HALF ROUND YOKES
878-019	(1) INTERAXLE LOCK VALVE FOR TANDEM OR TRIDEM DRIVE AXLES
87A-001	BLINKING LAMP WITH EACH INTERAXLE LOCK SWITCH, INTERAXLE UNLOCK DEFAULT WITH IGNITION OFF
423-020	MERITOR 16.5X7 Q+ CAST SPIDER CAM REAR BRAKES, DOUBLE ANCHOR, FABRICATED SHOES
433-002	NON-ASBESTOS REAR BRAKE LINING
434-003	STANDARD BRAKE CHAMBER LOCATION
451-023	CONMET CAST IRON REAR BRAKE DRUMS
425-002	REAR BRAKE DUST SHIELDS
440-021	SKF SCOTSEAL PLUS XL REAR OIL SEALS
426-099	HALDEX GOLDSEAL LONGSTROKE HEAVY DUTY 30/36 2-DRIVE AXLES SPRING PARKING CHAMBERS
428-003	HALDEX AUTOMATIC REAR SLACK ADJUSTERS
41T-002	SYNTHETIC 75W-90 REAR AXLE LUBE
42T-001	STANDARD REAR AXLE BREATHER(S)
Rear Suspension	
622-1CJ	HENDRICKSON RT463 REAR SUSPENSION @ 46,000#
621-016	HENDRICKSON RT/RTE - 7.19" SADDLE
431-001	STANDARD AXLE SEATS IN AXLE CLAMP GROUP
624-009	54 INCH AXLE SPACING

Prepared by:
Drew Ellison
LOU BACHRODT FREIGHTLINER
2840 CENTER PORT CIRCLE
POMPANO BEACH, FL 33064
Phone: 407-886-6704

Data Code	Description
628-005	STEEL BEAMS AND BRONZE CENTER BUSHINGS WITH BAR PIN ADJUSTABLE END CONNECTIONS
623-005	FORE/AFT CONTROL RODS
Brake System	
490-100	WABCO 4S/4M ABS WITHOUT TRACTION CONTROL
871-001	REINFORCED NYLON, FABRIC BRAID AND WIRE BRAID CHASSIS AIR LINES
904-001	FIBER BRAID PARKING BRAKE HOSE
412-001	STANDARD BRAKE SYSTEM VALVES
46D-002	STANDARD AIR SYSTEM PRESSURE PROTECTION SYSTEM
413-1AA	STANDARD U.S. FRONT BRAKE VALVE WITH ABS VALVES IN RAILS WITH RH HEAT SHIELDING
432-003	RELAY VALVE WITH 5-8 PSI CRACK PRESSURE, NO REAR PROPORTIONING VALVE
480-086	BW AD-9SI BRAKE LINE AIR DRYER WITH HEATER
479-024	AIR DRYER MOUNTED OUTBOARD ON RH RAIL BACK OF CAB, MAXIMUM 20 INCHES BACK OF CAB PROTRUSION
460-089	(1) 12 INCH STEEL AIR TANK MOUNTED ABOVE FRAME BACK OF CAB, 20 INCHES MAXIMUM BACK OF CAB PROTRUSION
607-001	CLEAR FRAME RAILS FROM BACK OF CAB TO FRONT REAR SUSPENSION BRACKET, BOTH RAILS OUTBOARD
477-001	PULL CABLE ON WET TANK, PETCOCK DRAIN VALVES ON ALL OTHER AIR TANKS
485-045	METALLIC AIR MANIFOLD MOUNTED TO BACK OF CAB CROSSMEMBER WITH SIX 1/4 INCH FITTINGS AND 70 PSI PROTECTION VALVE
Trailer Connections	
335-004	UPGRADED CHASSIS MULTIPLEXING UNIT
Wheelbase & Frame	
545-686	6850MM (270 INCH) WHEELBASE
546-102	7/16X3-9/16X11-1/8 INCH STEEL FRAME (11.11MMX282.6MM/0.437X11.13 INCH) 120KSI
547-001	1/4 INCH (6.35MM) C-CHANNEL INNER FRAME REINFORCEMENT
552-014	1900MM (75 INCH) REAR FRAME OVERHANG

Prepared by:
Drew Ellison
LOU BACHRODT FREIGHTLINER
2840 CENTER PORT CIRCLE
POMPANO BEACH, FL 33064
Phone: 407-886-6704

Data Code	Description
55W-007	FRAME OVERHANG RANGE: 71 INCH TO 80 INCH
549-002	24 INCH INTEGRAL FRONT FRAME EXTENSION
AC8-99D	CALC'D BACK OF CAB TO REAR SUSP C/L (CA) : 186.54 in
AE8-99D	CALCULATED EFFECTIVE BACK OF CAB TO REAR SUSPENSION C/L (CA) : 183.54 in
AE4-99D	CALC'D FRAME LENGTH - OVERALL : 396.69
AM6-99D	CALC'D SPACE AVAILABLE FOR DECKPLATE : 186.54 in
FSS-0LH	CALCULATED FRAME SPACE LH SIDE : 103.38 in
FSS-0RH	CALCULATED FRAME SPACE RH SIDE : 155.38 in
553-001	SQUARE END OF FRAME
550-001	FRONT CLOSING CROSSMEMBER
559-001	STANDARD WEIGHT ENGINE CROSSMEMBER
562-001	STANDARD MIDSHIP #1 CROSSMEMBER(S)
572-001	STANDARD REARMOST CROSSMEMBER
565-001	STANDARD SUSPENSION CROSSMEMBER
Chassis Equipment	
556-997	OMIT FRONT BUMPER, CUSTOMER INSTALLED SPECIAL BUMPER, DOES NOT COMPLY WITH FMCSR 393.203
551-017	GRADE 8 THREADED HEX HEADED FRAME FASTENERS INSTALLED WITH BOLT HEADS ON OUTSIDE OF FRAME
606-1U5	DRILLING PREP FOR VAC CON PER DRAWING 670-30020 REV
Fuel Tanks	
204-155	90 GALLON/340 LITER ALUMINUM FUEL TANK - LH
218-006	25 INCH DIAMETER FUEL TANK(S)
215-005	PLAIN ALUMINUM/PAINTED STEEL FUEL/HYDRAULIC TANK(S) WITH PAINTED BANDS
212-007	FUEL TANK(S) FORWARD
664-001	PLAIN STEP FINISH
205-001	FUEL TANK CAP(S)
122-1H3	DETROIT FUEL/WATER SEPARATOR WITH WATER IN FUEL SENSOR
216-999	20E-004 AUXILARY FUEL SUPPLY AND RETURN PORTS LOCATED ON LH FUEL TANK

Prepared by:
Drew Ellison
LOU BACHRODT FREIGHTLINER
2840 CENTER PORT CIRCLE
POMPANO BEACH, FL 33064
Phone: 407-886-6704

Data Code	Description
20E-004	AUXILIARY FUEL SUPPLY AND RETURN PORTS LOCATED ON LH FUEL TANK
202-016	HIGH TEMPERATURE REINFORCED NYLON FUEL LINE
221-001	FUEL COOLER
Tires	
093-0TB	MICHELIN XZY-3 425/65R22.5 20 PLY RADIAL FRONT TIRES
094-0DG	MICHELIN XDE M/S 10R22.5 14 PLY RADIAL REAR TIRES
Hubs	
418-056	CONMET PRESET PLUS IRON FRONT HUBS
450-056	CONMET PRESET PLUS IRON REAR HUBS
Wheels	
502-091	ACCURIDE 29374A 22.5X12.25 10-HUB PILOT 4.75 INSET 10-HAND ALUMINUM DISC FRONT WHEELS
505-720	ALCOA LVL ONE 88367X ALUMINUM OUTSIDE, ACCURIDE 29637 STEEL INSIDE; 22.5X8.25 10-HUB PILOT DISC REAR WHEELS
Cab Exterior	
829-1A2	114 INCH BBC FLAT ROOF ALUMINUM CONVENTIONAL CAB
650-008	AIR CAB MOUNTS
648-002	NONREMOVABLE BUGSCREEN MOUNTED BEHIND GRILLE
667-001	FRONT FENDERS
754-002	3-1/2 INCH FENDER EXTENSIONS
678-001	LH AND RH GRAB HANDLES
646-041	STATIONARY BLACK GRILLE
65X-004	BLACK HOOD MOUNTED AIR INTAKE GRILLE
644-004	FIBERGLASS HOOD
690-002	TUNNEL/FIREWALL LINER
727-1AF	SINGLE 14 INCH ROUND HADLEY AIR HORN UNDER LH DECK
726-002	DUAL ELECTRIC HORNS
728-001	SINGLE HORN SHIELD
657-001	DOOR LOCKS AND IGNITION SWITCH KEYED THE SAME
575-001	REAR LICENSE PLATE MOUNT END OF FRAME

Prepared by:
Drew Ellison
LOU BACHRODT FREIGHTLINER
2840 CENTER PORT CIRCLE
POMPANO BEACH, FL 33064
Phone: 407-886-6704

Data Code	Description
312-068	HALOGEN COMPOSITE HEADLAMPS WITH BLACK BEZELS
302-001	(5) AMBER MARKER LIGHTS
311-012	DAYTIME RUNNING LIGHTS - LOW BEAM ONLY
294-1A6	GROTE 54332 LED STOP TAIL TURN LIGHTS GROMMET MOUNTED WITH SEPARATE GROTE 62401 LED BACKUP LIGHTS.
300-015	STANDARD FRONT TURN SIGNAL LAMPS
744-1BH	DUAL WEST COAST MOLDED-IN COLOR MIRRORS
797-001	DOOR MOUNTED MIRRORS
796-001	102 INCH EQUIPMENT WIDTH
743-1AP	LH AND RH 8 INCH MOLDED-IN COLOR CONVEX MIRRORS M0UNTED UNDER PRIMARY MIRRORS
729-001	STANDARD SIDE/REAR REFLECTORS
677-998	NO CAB MOUNTED STEPS
768-043	63X14 INCH TINTED REAR WINDOW
661-003	TINTED DOOR GLASS LH AND RH WITH TINTED NON-OPERATING WING WINDOWS
654-027	RH AND LH ELECTRIC POWERED WINDOWS, PASSENGER SWITCHES ON DOOR(S)
663-013	TINTED WINDSHIELD
659-007	8 LITER WINDSHIELD WASHER RESERVOIR, CAB MOUNTED, WITHOUT FLUID LEVEL INDICATOR
Cab Interior	
707-1AK	OPAL GRAY VINYL INTERIOR
706-013	MOLDED PLASTIC DOOR PANEL
708-013	MOLDED PLASTIC DOOR PANEL
772-006	BLACK MATS WITH SINGLE INSULATION
691-008	FORWARD ROOF MOUNTED CONSOLE WITH UPPER STORAGE COMPARTMENTS WITHOUT NETTING
694-010	IN DASH STORAGE BIN
742-007	(2) CUP HOLDERS LH AND RH DASH
680-006	GRAY/CHARCOAL FLAT DASH
700-002	HEATER, DEFROSTER AND AIR CONDITIONER
701-001	STANDARD HVAC DUCTING
703-005	MAIN HVAC CONTROLS WITH RECIRCULATION SWITCH
170-015	STANDARD HEATER PLUMBING

Prepared by:
Drew Ellison
LOU BACHRODT FREIGHTLINER
2840 CENTER PORT CIRCLE
POMPANO BEACH, FL 33064
Phone: 407-886-6704

Data Code	Description
130-033	DENSO HEAVY DUTY AIR CONDITIONER COMPRESSOR
702-002	BINARY CONTROL, R-134A
739-033	STANDARD INSULATION
285-013	SOLID-STATE CIRCUIT PROTECTION AND FUSES
280-007	12V NEGATIVE GROUND ELECTRICAL SYSTEM
324-011	DOME DOOR ACTIVATED LH AND RH, DUAL READING LIGHTS, FORWARD CAB ROOF
655-005	LH AND RH ELECTRIC DOOR LOCKS
284-023	(1) 12 VOLT POWER SUPPLY IN DASH
756-1J3	BASIC HIGH BACK AIR SUSPENSION DRIVER SEAT WITH MECHANICAL LUMBAR AND INTEGRATED CUSHION EXTENSION
760-1J3	BASIC HIGH BACK AIR SUSPENSION PASSENGER SEAT WITH MECHANICAL LUMBAR AND INTEGRATED CUSHION EXTENSION
711-004	LH AND RH INTEGRAL DOOR PANEL ARMRESTS
758-036	VINYL WITH VINYL INSERT DRIVER SEAT
761-036	VINYL WITH VINYL INSERT PASSENGER SEAT
763-101	BLACK SEAT BELTS
532-002	ADJUSTABLE TILT AND TELESCOPING STEERING COLUMN
540-015	4-SPOKE 18 INCH (450MM) STEERING WHEEL
765-002	DRIVER AND PASSENGER INTERIOR SUN VISORS
Instruments & Controls	
732-004	GRAY DRIVER INSTRUMENT PANEL
734-004	GRAY CENTER INSTRUMENT PANEL
87L-003	ENGINE REMOTE INTERFACE WITH PARK BRAKE AND NEUTRAL INTERLOCKS
870-001	BLACK GAUGE BEZELS
486-001	LOW AIR PRESSURE INDICATOR LIGHT AND AUDIBLE ALARM
840-002	2 INCH PRIMARY AND SECONDARY AIR PRESSURE GAUGES
198-025	INTAKE MOUNTED AIR RESTRICTION INDICATOR WITHOUT GRADUATIONS
149-013	ELECTRONIC CRUISE CONTROL WITH SWITCHES IN LH SWITCH PANEL
156-007	KEY OPERATED IGNITION SWITCH AND INTEGRAL START POSITION; 4 POSITION OFF/RUN/START/ACCESSORY

Prepared by:
Drew Ellison
LOU BACHRODT FREIGHTLINER
2840 CENTER PORT CIRCLE
POMPANO BEACH, FL 33064
Phone: 407-886-6704

Data Code	Description
811-042	ICU3S, 132X48 DISPLAY WITH DIAGNOSTICS, 28 LED WARNING LAMPS AND DATA LINKED
160-038	HEAVY DUTY ONBOARD DIAGNOSTICS INTERFACE CONNECTOR LOCATED BELOW LH DASH
844-001	2 INCH ELECTRIC FUEL GAUGE
148-071	ENGINE REMOTE INTERFACE WITH INCREMENT/DECREMENT
163-004	ENGINE REMOTE INTERFACE CONNECTOR IN ENGINE COMPARTMENT
33U-004	PREWIRE PACKAGE FOR VAC CON CONTROL MODULE AND CHASSIS INTERFACE
856-001	ELECTRICAL ENGINE COOLANT TEMPERATURE GAUGE
864-001	2 INCH TRANSMISSION OIL TEMPERATURE GAUGE
830-017	ENGINE AND TRIP HOUR METERS INTEGRAL WITHIN DRIVER DISPLAY
852-002	ELECTRIC ENGINE OIL PRESSURE GAUGE
679-001	OVERHEAD INSTRUMENT PANEL
746-115	AM/FM/WB WORLD TUNER RADIO WITH BLUETOOTH AND USB AND AUXILIARY INPUTS, J1939
747-001	DASH MOUNTED RADIO
750-002	(2) RADIO SPEAKERS IN CAB
753-001	AM/FM ANTENNA MOUNTED ON FORWARD LH ROOF
810-027	ELECTRONIC MPH SPEEDOMETER WITH SECONDARY KPH SCALE, WITHOUT ODOMETER
817-001	STANDARD VEHICLE SPEED SENSOR
812-001	ELECTRONIC 3000 RPM TACHOMETER
813-998	NO VEHICLE PERFORMANCE MONITOR
162-018	IGNITION SWITCH CONTROLLED ENGINE STOP WITH CONTROL MOUNTED AT FIREWALL
836-015	DIGITAL VOLTAGE DISPLAY INTEGRAL WITH DRIVER DISPLAY
660-008	SINGLE ELECTRIC WINDSHIELD WIPER MOTOR WITH DELAY
304-001	MARKER LIGHT SWITCH INTEGRAL WITH HEADLIGHT SWITCH
882-009	ONE VALVE PARKING BRAKE SYSTEM WITH WARNING INDICATOR

Prepared by:
Drew Ellison
LOU BACHRODT FREIGHTLINER
2840 CENTER PORT CIRCLE
POMPANO BEACH, FL 33064
Phone: 407-886-6704

Data Code	Description
299-013	SELF CANCELING TURN SIGNAL SWITCH WITH DIMMER, WASHER/WIPER AND HAZARD IN HANDLE
298-039	INTEGRAL ELECTRONIC TURN SIGNAL FLASHER WITH HAZARD LAMPS OVERRIDING STOP LAMPS
Design	
065-000	PAINT: ONE SOLID COLOR
Color	
980-3F8	CAB COLOR A: N0225EA WHITE ELITE SS
986-020	BLACK, HIGH SOLIDS POLYURETHANE CHASSIS PAINT
98K-998	NO FUEL TANK CABINET PAINT
966-972	POWDER WHITE (N0006EA) REAR WHEELS/RIMS (PKWHT21, TKWHT21, W, TW)
963-003	STANDARD E COAT/UNDERCOATING
Certification / Compliance	
996-001	U.S. FMVSS CERTIFICATION, EXCEPT SALES CABS AND GLIDER KITS
Secondary Factory Options	
998-001	CORPORATE PDI CENTER IN-SERVICE ONLY
999-003	FRONT AND/OR REAR TIRE WIDTH EXCEEDS 2.6M (102.4 INCHES); DEALER ADVISED AND ACCEPTS

SOUTHERN SEWER EQUIPMENT SALES

3409 Industrial 27th St. • Ft. Pierce, FL 34946

(772) 595-9171 FAX • 1-800-782-4134 • (772) 595-6940

"A Certified MBE Woman Owned Business"

Mr. Malcolm Sommons February 20, 2017
City of Riviera Beach, Stormwater Department
2391 Avenue L
Riviera Beach, FL 33404
Via email: msommons@rivierabch.com

Dear Mr. Sommons,

*****Please note: The Florida Sheriffs Contract has separate specifications for the Sewer Cleaner Body and Chassis. This proposal does not include the cost for the chassis.***

Southern Sewer Equipment Sales is pleased to announce the opportunity for the City of Riviera Beach to purchase a new Vac-Con Sewer Combination Cleaner Body from the Florida Sheriff's Contract No. FSA16-VEH14.0, Specification #51.

The base Vac-Con model on Specification #51 includes the following items:

New Vac-Con Sewer Combination Cleaner Model V311HN/1000
11 Yard, 3/16" Corten Steel Debris Tank
Full Opening Rear Door
Hydraulic Rear Door Locks, with Door Grabber and Safety Latch
5" Butterfly Valve with 10' Layflat Hose
Minimum 50 Degree Tank Dumping, Power Up/Power Down
Hydraulic Scissors Lift
3 Stage Centrifugal Compressor
Automatic Vacuum Breaker and Overfill Protection
8" Vacuum Intake Hose
Boom Travel Tie Down
80 GPM @ 2500 PSI Water System
1000 Gallon Fresh Water Capacity, Polyethylene Tanks
Front Mounted Fixed Boom, 4 Way Hydraulic with 270 Degree Rotation & Joystick Controls
Front Mounted Fixed Hose Reel, 800'x 1" Capacity
400' of High Pressure Sewer Hose
30" Leader Hose
Hose Guide (Tiger Tail)
Wash Down Hand Gun, 20 GPM at 600 PSI with 25' of Hose and Nozzle
20' Aluminum Tubes with Quick Clamps
Sanitary Nozzle, Penetrator Nozzle
Fire Extinguisher
Triangle Kit
ICC lighting
DuPont Elite Polyurethane Paint

12 Month Standard Warranty

Base Bid Price:	$172,124.00

Optional Equipment:

600’ x 1” Hose Reel Capacity	($2,547.00)
Upgrade to 1300 Gallon Water Capacity	$5,266.00
Articulating Hose Reel (includes Hose Footage Counter)	$13,829.00
Wireless Remote	$5,056.00
Dual Engine Configuration: Gas Auxiliary Engine, Includes High Volume Hydrostatic Pump Upgrade and Auxiliary Engine Remote Oil Drain	$10,129.00
10’ Telescoping Boom Assembly with Pendant Control Station	$13,422.00
LED Lighting Package: Boom Mounted LED Flood Lights, Rear Mounted LED Flood Lights, 1) Mirror mounted LED strobe with Limb Guard, 1) Rear Mounted LED Strobe Light with Limb Guard, LED Arrowstick, Hand Held LED Spotlight and 4 corner LED Strobe System-Bumper Mounted	$8,018.00
Municipal Performance Package #1: Storage Box Behind Cab, Debris Body Power Flush System, 50’ Capacity Hand Gun Hose Reel, Low Water Alarm, Body Load Limit Alarm, Back Up Alarm, 2.5” Water Drain Valve, 6” Knife Valve	$8,697.00
Municipal Performance Package #2: Lazy Susan or Folding Pipe Rack, Additional 10’ Tubes, Dual Roller Level Wind Guide, Additional 100’ Hose, Nozzle Rack, Rear Tow Hooks, Adjustable Air Gap, First Aid Kit	$5,163.00
Remote Grease Zerk Assembly Package: Boom, Debris Tank & Articulating Hose Reel	$5,945.00
Heavy Reinforced Elbow	$1,086.00
80 GPM @ 3,000 PSI Water System, Includes 500' x 1" Sewer Hose	$9,447.00
Flat Style Rear Door with Hydraulic Rear Door Opener, in lieu of Dome Style Rear Door	$5,317.00
Long Handle Storage Rack, Rear of Mainframe	$494.00
Centrifugal Compressor Quiet Silencer, Stainless Steel Construction *(unpublished option, includes 2% discount)*	$4,550.14
¼ Turn Ball Valve in lieu of 2 ½ Gate Valve *(unpublished option, includes 2% discount)*	$153.86
Water Pump Remote Oil Drain *(unpublished option, includes 2% discount)*	$256.76
Upgrade to DOT Arrowboard *(unpublished option, includes 2% discount)*	$3,526.04
Fold Down Cone Storage Rack *(unpublished option, includes 2% discount)*	$710.50
Additional J Hook Pipe Rack Behind Hose Reel *(unpublished option, includes 2% discount)*	$178.36
Additional Folding Pipe Rack, Tank Mounted *(unpublished option, includes 2% discount)*	$2,754.78
Clear Coat for Body *(unpublished option, includes 2% discount)*	$3,920.00
12V DC Auxiliary Hydraulic Pump *(unpublished option, includes 2 % discount)*	$2,716.56
Upgrade to Aluminum Tool Box in lieu of Steel *(unpublished option, includes 2 % discount)*	$2,596.02
Upgrade to 1500 Gallon Water Capacity *(unpublished option, includes 2 % discount)*	$5,297.88
Rear Splash Guard, 2-10 o’clock position *(unpublished option, includes 2% discount)*	$2,504.88
Cyclone Separator *(unpublished option, includes 2 % discount)*	$4,640.30
SSES Nozzle Case: Super Slam Nozzle, Ultimate Chisel Nozzle, Radial Cleaning Nozzle, Flying Nozzle, FJ Penetrator Nozzle *(unpublished option, includes 2 % discount)*	$5,655.58
*John Deere ***Tier 3***, 6 Cylinder Diesel Auxiliary Engine in lieu of Gas *(unpublished option, includes 2% discount)*	$15,114.54

_____

Final Model After Options: V311LHAE/1500

TOTAL PRICE FOR VAC-CON BODY: $316,022.20

****John Deere Tier 3 diesel auxiliary engine is in limited supply and subject to availability at the time of order.***

The body price includes mounting the Vac-Con body to the chassis. Please review the Florida Sheriffs Contract for chassis options. The chassis supplier should drop ship the chassis to Vac-Con in Green Cove Springs, FL. The specifications should be approved by Vac-Con before ordering the chassis.

We appreciate the opportunity to provide this equipment to the City of Riviera Beach. Please feel free to contact Joey Westberry at (772) 834-8201 if you have any questions.

Sincerely,

Jenny Mitchem

Jenny Mitchem
Executive Sales Coordinator
jm/mjc

CITY OF RIVIERA BEACH CITY COUNCIL
AGENDA ITEM SUMMARY

Meeting Date: 5/3/2017

Agenda Category: CONSENT RESOLUTION

Subject: City Council approval to appropriate $35,000.00 from the Law Enforcement Trust Fund to implement crime impact efforts, including but not limited to, Gang Resistance Education and Training (G.R.E.A.T.)/SRO events, National Night Out Against Crime, Crime Impact Marketing Materials, training opportunities, and the Florida Attorney General's Preventing Crime Statewide Conference.

Recommendation/Motion: Staff recommends that the City Council approve the appropriation of $35,000.00 from the Law Enforcement Trust Fund for the Police Department's Crime Impact, Marketing and Command Training efforts.

Originating Dept	Police	**Costs**	$35,000.00
User Dept.	Police	**Funding Source**	Law Enforcement Trust Fund Account No. 150-00-358200 (State)
Advertised	No	**Budget Account Number**	Transfer from Account No. 150-00-358200 to the following account numbers: * 150-0817-521-0-4801 ($10,000) * 150-0817-521-0-5201 ($10,000) * 150-0817-521-0-5403 ($15,000)
Date Paper			
Affected Parties	Not Required		

Background/Summary:

As part of the Police Department's ongoing endeavors to serve the residents of the City of Riviera Beach, and for the fourth consecutive year, the Police Department seeks funding to implement crime impact efforts, including but not limited to, G.R.E.A.T./SRO events, National Night Out Against Crime, Crime Impact Marketing Materials, training opportunities, and the Florida Attorney General's Preventing Crime Statewide Conference, appropriating funds from the Law Enforcement Trust Fund (LETF) consistent with applicable State and Federal Statutes. Previous years' events have been successful with positive impacts on Police Community Relations.

Gang Resistance Education and Training (GREAT) is taught in all Riviera Beach elementary schools and funds will assist in purchasing educational materials.

National Night Out Against Crime is an annual and nationally recognized event used to educate citizens and business owners in Riviera Beach on crime impact strategies.

The Department produces various crime impact marketing materials each year that inform residents of successful crime impact initiatives and assist in community engagement and education. Some of the publications to be funded include the "Blotter" newsletter and the "End Game" crime alert.

Senior Management Development is essential to the mission of the Department. Over the past five years, the

Department has increased the number of senior management personnel who have attended the two nationally recognized law enforcement executive management programs. Those programs are the FBI National Academy in Quantico, VA and the Command Officer Development Course at the Southern Police Institute in Louisville, KY. Both institutions offer police organizations a unique opportunity not found in Palm Beach County. The Command Officer Development Course is a 400 hour Educational Program for Law Enforcement mid- to upper-level managers which provides a solid foundation for practical Law Enforcement administration and a comprehensive overview of management practices. This training is offered in five (5) two-week sessions over a period of five (5) months. Participants successfully completing the course will be able to:

- Assist in developing the strategic direction of an organization, including the mission, values, and goals
- Enhance internal communications within an organization
- Develop alternative solutions to specific problems
- Prepare a formal staff study
- Plan, implement, and evaluate focused policing strategies
- Develop rules, regulations, policies and procedures to meet needs, comply with law, and meet Accreditation standards

All organized training programs, in conjunction with promotional items to support crime impact efforts, will be supported with the use of the Law Enforcement Trust Fund dollars in the amount of $35,000.

The expenditure of Law Enforcement Trust Fund dollars is permissible for this effort and consistent with State and Federal Laws. This project can be funded using Law Enforcement Trust Fund dollars. These funds may be expended upon request by the Chief of Police to the governing body of the municipality, accompanied by a written certification that the request complies with the provisions of Florida Statute 932.7055.

The Florida State Statute provides that Law Enforcement Trust Funds shall be used for…"crime prevention, safe neighborhoods…prevention programs or for law enforcement purposes, which include defraying the cost of protracted or complex investigations, [and] providing additional equipment. The proceeds and interest may not be used to meet normal operating expenses of the law enforcement agency."
This item serves as written certification that this request complies with Florida Statute 932.7055.

Fiscal Years
Capital Expenditures
Operating Costs
External Revenues
Program Income (city)
In-kind Match (city)
Net Fiscal Impact
NO. Additional FTE Positions (cumulative)

III. Review Comments

A. Finance Department Comments:

B. Purchasing/Intergovernmental Relations/Grants Comments:

C. Department Director Review:

Contract Start Date

Contract End Date

Renewal Start Date

Renewal Start Date

Renewal End Date

Number of 12 month terms this renewal

Dollar Amount

Contractor Company Name

Contractor Contact

Contractor Address

Contractor Phone Number

Contractor Email

Type of Contract

Describe

ATTACHMENTS:

File Name	Description	Upload Date	Type
LETF_2016_Resolution_$35_000.00_for_Crime_Prevention_and_Marketing_Efforts_4-19-17.doc	RESOLUTION: $35,OOO FROM LETF FOR CRIME IMPACT EFFORTS	4/24/2017	Resolution

REVIEWERS:

Department	Reviewer	Action	Date
Finance	Jones, Danny	Approved	4/26/2017 - 8:18 PM

RESOLUTION NO. _____

A RESOLUTION OF THE CITY COUNCIL OF THE CITY OF RIVIERA BEACH, PALM BEACH COUNTY, FLORIDA, AUTHORIZING THE DIRECTOR OF FINANCE AND ADMINISTRATIVE SERVICES TO APPROPRIATE $35,000.00 FROM THE LAW ENFORCEMENT TRUST FUND (LETF) TO BE USED TO IMPLEMENT CRIME IMPACT EFFORTS, INCLUDING BU NOT LIMITED TO, GANG RESISTANCE EDUCATION AND TRAINING (G.R.E.A.T.)/SRO EVENTS, NATIONAL NIGHT OUT AGAINST CRIME, CRIME IMPACT AND MARKETING MATERIALS, TRAINING OPPORTUNITIES, AND THE FLORIDA ATTORNEY GENERAL'S PREVENTING CRIME STATEWIDE CONFERENCE; AND PROVIDING AN EFFECTIVE DATE.

WHEREAS, the Police Department, as part of its ongoing endeavors to service the residents of the City of Riviera Beach, recognizes the need for specialized training; and

WHEREAS, the Police Chief seeks to implement and support Law Enforcement efforts designed to impact crime and disrupt potential criminal activity, and implement crime impact efforts and events, including but not limited to, G.R.E.A.T./SRO events, Crime Impact Marketing Materials, National Night Out Against Crime, and the Florida Attorney General's Statewide Crime Impact Conference; and

WHEREAS, the specialized training will greatly enhance the Police Department's crime impact and community outreach efforts; and

WHEREAS, the request is consistent with the provisions of Florida State Statute §932.7055.

NOW, THEREFORE, BE IT RESOLVED BY THE CITY COUNCIL OF THE CITY OF RIVIERA BEACH, PALM BEACH COUNTY, FLORIDA, AS FOLLOWS:

SECTION 1: The City Council approves funding to implement specialized training such as Gang Resistance Education and Training (GREAT), a Command Officer Development Training Course, and crime impact initiatives, marketing, and events as set forth by the Police Department.

SECTION 2: The City Council authorizes the Director of Finance and Administrative Services to appropriate the fund balance from the Law Enforcement Trust Fund for this expenditures as follows:

150-0817-521-0-4801 ($10,000)
150-0817-521-0-5201 ($10,000)
150-0817-521-0-5403 ($15,000)

SECTION 3: This Resolution shall take effect immediately upon its passage and approval.

PASSED AND APPROVED this _____ day of _____, 2017.

APPROVED:

_____
THOMAS A. MASTERS
MAYOR

_____
TERENCE D. DAVIS
CHAIRPERSON

ATTEST:

_____
CLAUDENE L. ANTHONY
CERTIFIED MUNICIPAL CLERK
CITY CLERK

_____
KASHAMBA MILLER-ANDERSON
CHAIR PRO TEM

_____
LYNNE L. HUBBARD
COUNCILPERSON

_____
TONYA DAVIS JOHNSON
COUNCILPERSON

_____
DAWN S. PARDO
COUNCILPERSON

MOTIONED BY: _____

SECONDED BY: _____

L. HUBBARD _____

K. MILLER-ANDERSON _____

T. DAVIS JOHNSON _____

D. PARDO _____

T. DAVIS _____

REVIEWED AS TO LEGAL SUFFICIENCY

ANDREW DEGRAFFENREIDT
CITY ATTORNEY

DATE: _____

CITY OF RIVIERA BEACH CITY COUNCIL
AGENDA ITEM SUMMARY

Meeting Date: 5/3/2017

Agenda Category: REGULAR

Subject: MAYOR MASTERS SUPPORTS THE ANQUAN BOLDIN FOUNDATION FOR SCHOLARSHIPS.

Recommendation/Motion:

Originating Dept	MAYOR	**Costs**	
User Dept.	MAYOR	**Funding Source**	
Advertised	No	**Budget Account Number**	
Date			
Paper			
Affected Parties	Not Required		

Background/Summary:

NFL GREAT ANQUAN BOLDIN HAS BEEN GIVING BACK TO THIS AND SEVERAL COMMUNITIES THROUGHOUT PALM BEACH COUNTY SINCE BEGINNING HIS FOOTBALL CAREER THIRTEEN YEARS AGO. THE FOUNDATION PROVIDES SCHOLARSHIPS TO UNDERPRIVILEGED CHILDREN. hE SPONSORS AFTER SCHOOL PROGRAMS, AL-STAR FOOTBALL CAMPS, FOOD DISTRIBUTION AND SCHOOL SUPPLIES. THIS COMMUNITY BENEFITS AMOUNT OF $300 IS THE SECOND INSTALLMENT TO THE FOUNDATION.

Fiscal Years
Capital Expenditures
Operating Costs
External Revenues
Program Income (city)
In-kind Match (city)
Net Fiscal Impact
NO. Additional FTE Positions (cumulative)

III. Review Comments

A. Finance Department Comments:

B. Purchasing/Intergovernmental Relations/Grants Comments:

C. Department Director Review:

Contract Start Date

Contract End Date

Renewal Start Date

Renewal End Date

Number of 12 month terms this renewal

Dollar Amount

Contractor Company Name

Contractor Contact

Contractor Address

Contractor Phone Number

Contractor Email

Type of Contract

Describe

ATTACHMENTS:

File Name	Description	Upload Date	Type
AnQuanBoldin_CB_2.pdf	AnQuan Boldin CB 2	4/25/2017	Cover Memo

REVIEWERS:

Department	Reviewer	Action	Date
Purchasing	Jones, Danny	Approved	4/26/2017 - 8:14 PM

Waste Management Community Benefits
Request for Donations

The City of Riviera Beach, in conjunction with Waste Management Inc. of Florida, has established a Community Benefits Policy. Under the Policy each elected official shall be entitled to designate funds to support approved public projects for public purposes. Public purposes include, but are not limited to, charitable events, not-for-profit organizational events or programs and City functions or projects (which may include contributions to the City's Scholarship Fund or the City's Housing Trust Fund). All requests for donations must be presented to the City Council and approved by a majority of the City Council. The City will attempt to process all requests within fourteen (14) days of City Council approval.

Ineligible uses include the purchase of tables at events, campaign contributions, or payment for salaries or operational expenses. Funds cannot be used to cover an elected official's travel, meals, or for his or her personal benefit or gain or for the personal gain of relatives as defined by City Code, the Palm Beach County Code of Ethics, or state statues, as applicable. Funds cannot be given to an entity/agency/organization for which the elected official is a director or officer.

Name of Elected Official Sponsoring Donation: **Mayor Thomas A. Masters**

Legal Name of Organization: Angiuin Boldin Foundation

Program/ Activity Name: Q-Fest

Requested Amount: $ 2,500.00 $300.00 AB

Briefly describe the Program/Activity below **and** attach (1) letter of request or a more detailed description of the Program/Activity; (2) non-profit paperwork and (3) w-9 IRS form:

See attached

Re: scholarship Donation

Mailing Address: 931 Village Blvd Suite 905 Box 104 City: WPB State: FL Zip: 33409

Contact Person(s): Mr. Carl Boldin

Phone: 561-385-5606 Fax: n/a

Email Address: boldinarl@bellsouth.net

Signature of Authorized Official: Carl Boldin

Name of Authorized Official: Carl Boldin Date: 3/17/17

*****Return the form to the Elected Official or the Legislative Office for processing.**

Waste Management Community Benefits Request for Donations Approval by Elected Official

I, **Mayor Thomas Masters,** hereby certify that the donation to Anquan Boldin Foundation complies with the City's Community Benefits Policy. I further certify that: (1) I am not an officer, director, partner, proprietor, employee, subcontractor or agent of the organization, its parent organization or subsidiary and I do not have any contractual relationship with or other obligation with to the organization its parent organization or subsidiary; (2) I have no relatives or business associates (as those terms are defined in section 112.312, Florida Statutes) who are officers, directors, partners, proprietors, employees, subcontractors or agents of the organization, its parent organization or subsidiary; (3) The disbursement of the foregoing amount will not inure to my special gain or loss or to the special gain or loss of my relatives or my business associates; and (4) I am not aware of any conflict of interest the disbursement of the foregoing amount to the organization will create for the City of Riviera Beach or myself.

Signature of Elected Official: _____ Date: April 25, 2017

Amount Approved: **$300.00**

City Council Action

[redacted]

Chairperson's Signature: _____ Date: _____

Revised November 2011

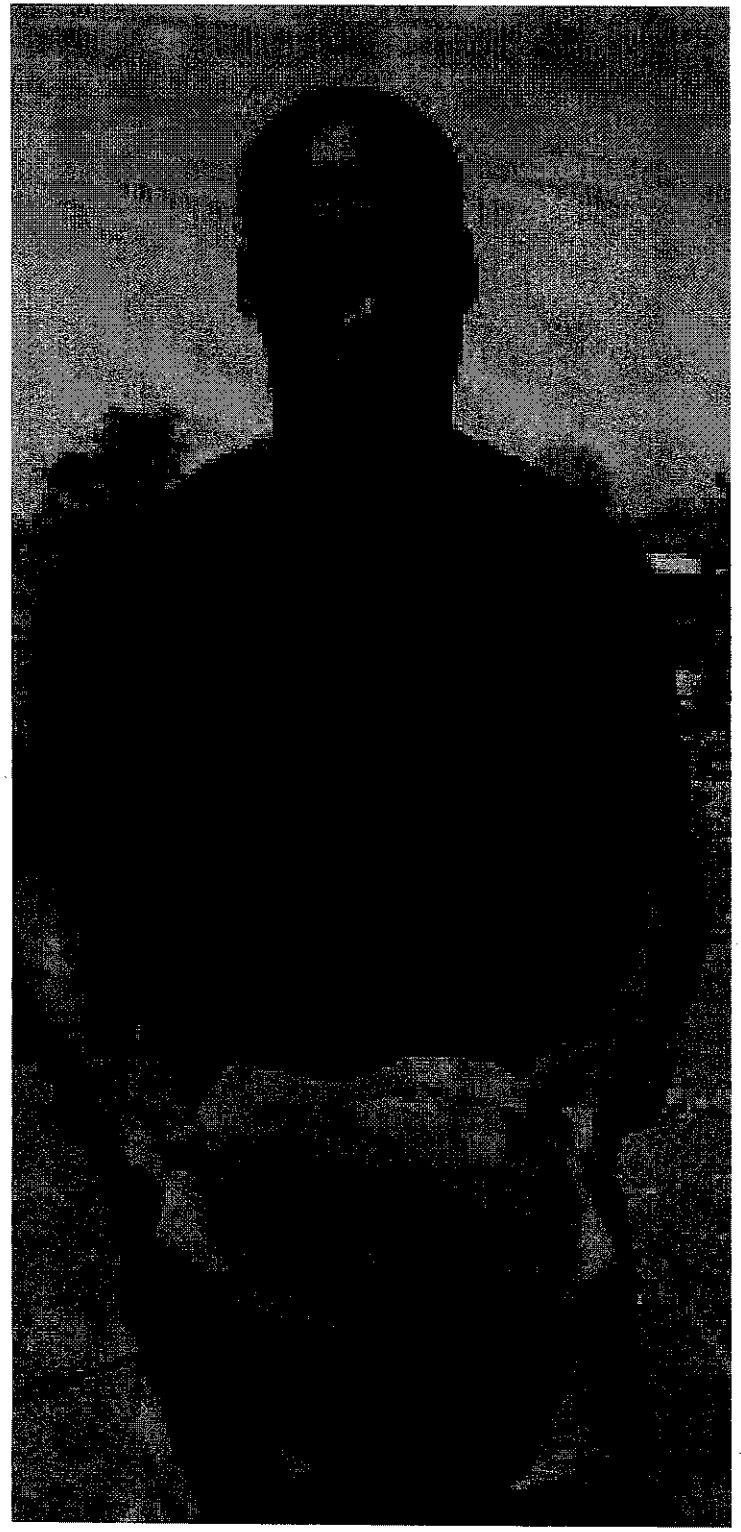

ABOUT ANQUAN BOLDIN FOUNDATION

The Anquan Boldin Foundation or Q81 Foundation, established in 2004, is dedicated to expanding the educational and life opportunities of underprivileged children. As evidenced by the charitable activities in Arizona, Baltimore, San Francisco and Boldin's home State of Florida, the Q81 Foundation has a ten-year history of helping Educational After-School Programs, All-Star Football Camps, College Academic Scholarship Programs, Dental Programs, Life Insurance Programs, Nutritional Education, Food Distribution, Back 2 School Supplies, and Home Energy Programs. The Q81 Foundation, partnered with Florida Crystals, conducts an eight-week Q81 Summer Enrichment Program with a success rate increase of student GPA' at 76%, enabling them eligible to play sports the following Fall term. The Foundation conducts annual Thanksgiving and Holiday Shopping Sprees and offers VIP Sporting Excursions to underprivileged children locally, nationally and globally. Anquan Boldin is a Global Human Rights Advocate and Spokesman for Oxfam America, testifying before Congress in 2013 on behalf of the citizens of Senegal, Africa.

Consumer's Certificate of Exemption

Issued Pursuant to Chapter 212, Florida Statutes

85-8014774-50UC-2	09/12/2014	09/30/2015
Certificate Number	Effective Date	Expiration Date

certifies that

ANOUAN BOLDIN FOUNDATION
3666 E HWY 70
OKEECHOBEE FL 34972

exempt from the payment of Florida sales and use tax on real property rented, transient rental property rented, tangi
personal property purchased or rented, or services purchased.

Important Information for Exempt Organizations

DR-
R. 04/

1. You must provide all vendors and suppliers with an exemption certificate before making tax exempt purchases. See Rule 12A-1.038, Florida Administrative Code (F.A.C.).

2. Your *Consumer's Certificate of Exemption* is to be used solely by your organization for your organization's customary non-profit activities.

3. Purchases made by an individual on behalf of the organization are taxable, even if the individual will be reimbursed by the organization.

4. This exemption applies only to purchases your organization makes. The sale or lease to others of tangible personal property, sleeping accommodations, or other real property is taxable. Your organization must register and collect and remit sales and use tax on such taxable transactions. Note: Churches are exempt from this requirement except when they are the lessor of real property (Rule 12A-1.070, F.A.C.).

5. It is a criminal offense to fraudulently present this certificate to evade the payment of sales tax. Under no circumstances should this certificate be used for the personal benefit of any individual. Violators will be liable for payment of the sales tax plus a penalty of 200% of the tax, and may be subject to conviction of a third degree felony. Any violation will require the revocation of this certificate.

6. If you have questions regarding your exemption certificate, please contact the Exemption Unit of Account Management at 800-352-3671. From the available options, select "Registration or Taxes," then "Registration Information," and finally "Exemption Certificates and Nonprofit Entities." The mailing address is PO Box 6480, Tallahassee, FL 32314-6480.

CITY OF RIVIERA BEACH CITY COUNCIL
AGENDA ITEM SUMMARY

Meeting Date: 5/3/2017

Agenda Category: REGULAR

Subject: MAYOR MASTERS SUPPORTS LOCAL STUDENTS SINGING AT CARNEGIE HALL

Recommendation/Motion: RECOMMEND APPROVAL

Originating Dept	MAYOR	**Costs**	$800.00
User Dept.	MAYOR	**Funding Source**	
Advertised	No	**Budget Account Number**	130-0101-511-6-8301
Date			
Paper			
Affected Parties	Notified		

Background/Summary:

NINE STUDENTS FROM RIVIERA BEACH ARE MEMBERS OF THE PALM BEACH CHILDREN'S CHORUS, A NON-PROFIT YOUTH PERFORMING ARTS ORGANIZATION. THE MULTI-CULTURALLY, SOCIALLY AND ECONOMICALLY DIVERSE GROUP OF CHILDREN, AGES 8-18 ARE LEARNING THE POWER OF MUSIC CAN CHANGE THE WORLD ONE VOICE, ONE CHILD AT A TIME. THE SCHOOL'S MISSION IS TO TEACH STUDENTS THAT NOT ONLY MUSIC, BUT LEADERSHIP, TEAMWORK, COLLABORATION, RESPONSIBILITY, INNOVATION AND ACCEPTANCE OF OTHERS ARE NECESSARY LIFE SKILLS THAT CAN MAKE THE WORLD A BETTER PLACE. THIS SUMMER THE PALM BEACH CHILDREN'S CHORUS IS THE ONLY YOUTH CHORUS IN FLORIDA SELECTED TO PERFORM AT NEW YORK'S CARNEGIE HALL DURING THE CHORAL CONVERGENCE 2017.

Fiscal Years
Capital Expenditures
Operating Costs
External Revenues
Program Income (city)
In-kind Match (city)
Net Fiscal Impact
NO. Additional FTE Positions (cumulative)

III. Review Comments

A. Finance Department Comments:

B. Purchasing/Intergovernmental Relations/Grants Comments:

C. Department Director Review:

Contract Start Date

Contract End Date

Renewal Start Date

Renewal End Date

Number of 12 month terms this renewal

Dollar Amount

Contractor Company Name

Contractor Contact

Contractor Address

Contractor Phone Number

Contractor Email

Type of Contract

Describe

ATTACHMENTS:

File Name	Description	Upload Date	Type
PALM_BEACH_CHILDRENS_CHORUS__INC._05032017.pdf	PALM BEACH CHILDRENS CHORUS, INC.	5/2/2017	Cover Memo

REVIEWERS:

Department	Reviewer	Action	Date
Purchasing	Jones, Danny	Approved	4/26/2017 - 8:14 PM

Waste Management Community Benefits
Request for Donations

The City of Riviera Beach, in conjunction with Waste Management Inc. of Florida, has established a Community Benefits Policy, as amended in November 2011. Under the Policy each elected official shall be entitled to designate funds to support approved public projects for public purposes. Public purposes include, but are not limited to, charitable events, not-for-profit organizational events or programs and City functions or projects (which may include contributions to the City's Scholarship Fund or the City's Housing Trust Fund). All requests for donations must be presented to the City Council and approved by a majority of the City Council. The City will attempt to process all requests within fourteen (14) days of City Council approval.

Ineligible uses include the purchase of tables at events, campaign contributions, or payment for salaries or operational expenses. Funds cannot be used to cover an elected official's travel, meals, or for his or her personal benefit or gain or for the personal gain of relatives as defined by City Code, the Palm Beach County Code of Ethics, or state statues, as applicable. Funds cannot be given to an entity/agency/organization for which the elected official is a director or officer.

Name of Elected Official Sponsoring Donation: **Mayor Thomas Masters**

Legal Name of Organization: Palm Beach Children's Chorus, Inc.

Program/ Activity Name: Carnegie Hall Performance

Requested Amount: **$800.00**

Briefly describe the Program/Activity below **and** attach (1) letter of request or a more detailed description of the Program/Activity; (2) non-profit paperwork and (3) w-9 IRS form:

PBCC is a non-profit children's performing arts organization. The multi-culturally, socially and economically diverse group of children, ages 8 – 18 are learning the power of music can change the world, one voice, one child at a time. The students are from all areas throughout Palm Beach County, nine from Riviera Beach. The school's mission is to teach children that not only music, but leadership, teamwork, collaboration, responsibility, innovation and acceptance of other are necessary life skills that can make the world a better place. This summer the Palm Beach Children's Chorus is performing at New York's Carnegie Hall at the Choral Convergence 2017. This youth chorus is the only from the state of Florida that will be performing at this prestigious event.

Mailing Address: 800 Village Square Crossing, Ste. 319 City: PB Gardens State: FL Zip: 33410

Contact Person(s): Cassandra 'Sandi' Russell

Phone: 561-444-8455 Fax: 561-508-4690

Email Address: pbchildrenschorus@gmail.com

Name of Authorized Official: CASSANDRA 'SANDI' RUSSELL

Signature of Authorized Official: Cassandra Russell Date: 4/26/17

Waste Management Community Benefits Request for Donations Approval by Elected Official

I, **Mayor Thomas Masters,** hereby certify that the donation to Palm Beach Children's Chorus, Inc. complies with the City's Community Benefits Policy. I further certify that: (1) I am not an officer, director, partner, proprietor, employee, subcontractor or agent of the organization, its parent organization or subsidiary and I do not have any contractual relationship with or other obligation with to the organization its parent organization or subsidiary; (2) I have no relatives or business associates (as those terms are defined in section 112.312, Florida Statutes) who are officers, directors, partners, proprietors, employees, subcontractors or agents of the organization, its parent organization or subsidiary; (3) The disbursement of the foregoing amount will not inure to my special gain or loss or to the special gain or loss of my relatives or my business associates; and (4) I am not aware of any conflict of interest the disbursement of the foregoing amount to the organization will create for the City of Riviera Beach or myself.

Signature of Elected Official: _____ Date: April 26, 2017

Amount Approved: **$800.00**

City Council Action

[redacted]

Chairperson's Signature: _____ Date: _____

Revised November 2011

Palm Beach Children's Chorus, Inc.
800 Village Square Crossing, Suite 319
Palm Beach Gardens, FL 33410
561-444-8455
www.pbchildrenschorus.org
Email: info@pbchildrenschorus.org

April 17, 2017

Dear Community Leaders and Corporate Leaders,

Palm Beach Children's Chorus is pleased to announce that we have been recognized for our organization's dedication to musical excellence. We have been invited to perform in New York City's prestigious Carnegie Hall. Palm Beach Children's Chorus, led by highly regarded, Artistic Director, Sandi Russell, and acclaimed for its agile Bel Canto sound has made it one of Palm Beach County's most in-demand children's choirs, announces that our singers will perform on June 16, 2017 in New York City. A limited number of ensembles from the United States have been invited to participate in this special once in a lifetime opportunity. Palm Beach Children's Chorus is one of 11 ensembles from the United States and only one from the state of Florida to perform in this world premiere event. Palm Beach Children's Chorus will have the opportunity to share the Carnegie Hall stage with gifted youth ensembles from as far away as the Czech Republic! Our singers will have a Spotlight performance in the Stern Auditorium and will also be a part of a world premiere of a newly commissioned work composed by Tesfa Wondemagegnehu!

Our chorus has been invited to participate in and perform as a part of the 2017 Choral Convergence Festival, which will culminate with a concert in the Isaac Stern Auditorium in Carnegie Hall. During the 4 day stay in New York City, the singers of Palm Beach Children's Chorus will also take part in a educational clinic led by the renowned, Master Choral Clinician Elena Sharkova to enhance their musicianship skills. They will also perform in an adjudicated performance. This educational travel and performance opportunity is aligned with the National Core Standards for Music Education.

We are seeking your support of this educational endeavor because most of our students simply cannot afford this opportunity. Please consider helping our students travel to and perform at New York's Carnegie Hall. The cost of the trip, which includes airline, lodging and meals, is estimated at $1500 per student. Our group is comprised of 40 talented young singers, ages 8-17. Palm Beach Children's Chorus is a not-for-profit 501 (c) (3) organization, Tax ID 47-5207635. Please consider supporting our organization. Any contributions are greatly appreciated and are always tax deductible.

Your help will have a tremendous impact in the lives of children in our community.

If you should need more information, please feel free to contact Sandi Russell at 561-444-8455.

Thank you for considering supporting Palm Beach Children's Chorus.

PRESS RELEASE: FOR IMMEDIATE RELEASE

Spring Happenings 2017

PALM BEACH CHILDREN'S CHORUS INVITED TO

PERFORM IN CARNEGIE HALL

NEW YORK'S MOST
PRESTIGIOUS CONCERT HALL
Friday, June 16, 2017 5 PM
Isaac Stern Auditorium
Carnegie Hall

Join us for our 2016-2017 Concert Season.
Palm Beach Children's Chorus will also make special guest appearances with the Choral Society of the Palm Beaches and The Ebony Chorale of the Palm Beaches

Palm Beach Children's Chorus Presents

Celebrate the Music 2017: A Spring Musical Extravaganza
When: Saturday, May 20, 2017
6:00 PM
Where: Florida Atlantic University Lifelong Learning Society Auditorium
5353 Parkside Drive,
Jupiter, FL 33458

For Information call 561-444-8455 or email us at info@pbchildrenschorus.org

Exciting News!

Palm Beach Children's Chorus, led by highly regarded Artistic Director Sandi Russell, and acclaimed for its agile Bel Canto sound that has made it one of Palm Beach County's most in-demand children's choirs, has been invited to perform at New York's prestigious Carnegie Hall. A limited number of ensembles from the United States have been selected for this special invitation. This is a once in a lifetime opportunity!

Palm Beach Children's Chorus will participate in the 2017 Choral Convergence Festival from June 14-18, 2017 in New York City and will culminate events by performing in a world music premiere concert in Carnegie Hall, under the conducting baton of highly the acclaimed Doreen Rao. In addition, Palm Beach Children's Chorus will have the opportunity to perform under the direction of Palm Beach Children's Chorus Co-founding Artistic Director, Sandi Russell in a special Spotlight performance of their own repertoire.

Noted for its blend of musical sophistication, spirited presentation, and ensemble virtuosity, Palm Beach Children's Chorus will spend 4 nights in New York City in preparation for their concert. Members of the community are encouraged to give financial support in sending these singers to New York by contacting Sandi Russell at 561-444-8455 or via email at

0000097 06/29/16

FLORIDA

Consumer's Certificate of Exemption

DR-14
R. 10/15

Issued Pursuant to Chapter 212, Florida Statutes

85-8016873478C-5	06/14/2016	06/30/2021	501(C)(3) ORGANIZATION
Certificate Number	Effective Date	Expiration Date	Exemption Category

This certifies that

PALM BEACH CHILDRENS CHORUS INC
9241 BIRMINGHAM DR
PALM BEACH GARDENS FL 33410-5923

is exempt from the payment of Florida sales and use tax on real property rented, transient rental property rented, tangible personal property purchased or rented, or services purchased.

FLORIDA

Important Information for Exempt Organizations

DR-14
R. 10/15

1. You must provide all vendors and suppliers with an exemption certificate before making tax-exempt purchases. See Rule 12A-1.038, Florida Administrative Code (F.A.C.).

2. Your *Consumer's Certificate of Exemption* is to be used solely by your organization for your organization's customary nonprofit activities.

3. Purchases made by an individual on behalf of the organization are taxable, even if the individual will be reimbursed by the organization.

4. This exemption applies only to purchases your organization makes. The sale or lease to others of tangible personal property, sleeping accommodations, or other real property is taxable. Your organization must register, and collect and remit sales and use tax on such taxable transactions. Note: Churches are exempt from this requirement except when they are the lessor of real property (Rule 12A-1.070, F.A.C.).

5. It is a criminal offense to fraudulently present this certificate to evade the payment of sales tax. Under no circumstances should this certificate be used for the personal benefit of any individual. Violators will be liable for payment of the sales tax plus a penalty of 200% of the tax, and may be subject to conviction of a third-degree felony. Any violation will require the revocation of this certificate.

6. If you have questions regarding your exemption certificate, please contact the Exemption Unit of Account Management at 800-352-3671. From the available options, select "Registration of Taxes," then "Registration Information," and finally "Exemption Certificates and Nonprofit Entities." The mailing address is PO Box 6480, Tallahassee, FL 32314-6480.

Form **W-9**
(Rev. December 2014)
Department of the Treasury
Internal Revenue Service

Request for Taxpayer Identification Number and Certification

Give Form to the requester. Do not send to the IRS.

Print or type
See Specific Instructions on page 2.

1 Name (as shown on your income tax return). Name is required on this line; do not leave this line blank.
Palm Beach Children's Chorus, Inc.

2 Business name/disregarded entity name, if different from above

3 Check appropriate box for federal tax classification; check only one of the following seven boxes:
☐ Individual/sole proprietor or single-member LLC ☐ C Corporation ☐ S Corporation ☐ Partnership ☐ Trust/estate
☐ Limited liability company. Enter the tax classification (C=C corporation, S=S corporation, P=partnership) ▶
Note. For a single-member LLC that is disregarded, do not check LLC; check the appropriate box in the line above for the tax classification of the single-member owner.
☑ Other (see instructions) ▶ Non-profit 501(c)3 Tax Exempt Organization

4 Exemptions (codes apply only to certain entities, not individuals; see instructions on page 3):
Exempt payee code (if any)
Exemption from FATCA reporting code (if any)
(Applies to accounts maintained outside the U.S.)

5 Address (number, street, and apt. or suite no.)
800 Village Square Crossing, Suite 319

Requester's name and address (optional)

6 City, state, and ZIP code
Palm Beach Gardens, FL 33410

7 List account number(s) here (optional)

Part I Taxpayer Identification Number (TIN)

Enter your TIN in the appropriate box. The TIN provided must match the name given on line 1 to avoid backup withholding. For individuals, this is generally your social security number (SSN). However, for a resident alien, sole proprietor, or disregarded entity, see the Part I instructions on page 3. For other entities, it is your employer identification number (EIN). If you do not have a number, see *How to get a TIN* on page 3.

Note. If the account is in more than one name, see the instructions for line 1 and the chart on page 4 for guidelines on whose number to enter.

Social security number
☐☐☐ - ☐☐ - ☐☐☐☐

or

Employer identification number
4 7 - 5 2 0 7 6 3 5

Part II Certification

Under penalties of perjury, I certify that:

1. The number shown on this form is my correct taxpayer identification number (or I am waiting for a number to be issued to me); and
2. I am not subject to backup withholding because: (a) I am exempt from backup withholding, or (b) I have not been notified by the Internal Revenue Service (IRS) that I am subject to backup withholding as a result of a failure to report all interest or dividends, or (c) the IRS has notified me that I am no longer subject to backup withholding; and
3. I am a U.S. citizen or other U.S. person (defined below); and
4. The FATCA code(s) entered on this form (if any) indicating that I am exempt from FATCA reporting is correct.

Certification instructions. You must cross out item 2 above if you have been notified by the IRS that you are currently subject to backup withholding because you have failed to report all interest and dividends on your tax return. For real estate transactions, item 2 does not apply. For mortgage interest paid, acquisition or abandonment of secured property, cancellation of debt, contributions to an individual retirement arrangement (IRA), and generally, payments other than interest and dividends, you are not required to sign the certification, but you must provide your correct TIN. See the instructions on page 3.

Sign Here Signature of U.S. person ▶ Cassandra Russell Date ▶ 4-25-2017

General Instructions

Section references are to the Internal Revenue Code unless otherwise noted.

Future developments. Information about developments affecting Form W-9 (such as legislation enacted after we release it) is at *www.irs.gov/fw9*.

Purpose of Form

An individual or entity (Form W-9 requester) who is required to file an information return with the IRS must obtain your correct taxpayer identification number (TIN) which may be your social security number (SSN), individual taxpayer identification number (ITIN), adoption taxpayer identification number (ATIN), or employer identification number (EIN), to report on an information return the amount paid to you, or other amount reportable on an information return. Examples of information returns include, but are not limited to, the following:

- Form 1099-INT (interest earned or paid)
- Form 1099-DIV (dividends, including those from stocks or mutual funds)
- Form 1099-MISC (various types of income, prizes, awards, or gross proceeds)
- Form 1099-B (stock or mutual fund sales and certain other transactions by brokers)
- Form 1099-S (proceeds from real estate transactions)
- Form 1099-K (merchant card and third party network transactions)
- Form 1098 (home mortgage interest), 1098-E (student loan interest), 1098-T (tuition)
- Form 1099-C (canceled debt)
- Form 1099-A (acquisition or abandonment of secured property)

Use Form W-9 only if you are a U.S. person (including a resident alien), to provide your correct TIN.

If you do not return Form W-9 to the requester with a TIN, you might be subje to backup withholding. See What is backup withholding? on page 2.

By signing the filled-out form, you:

1. Certify that the TIN you are giving is correct (or you are waiting for a numb to be issued),
2. Certify that you are not subject to backup withholding, or
3. Claim exemption from backup withholding if you are a U.S. exempt paye applicable, you are also certifying that as a U.S. person, your allocable share any partnership income from a U.S. trade or business is not subject to the withholding tax on foreign partners' share of effectively connected income, a
4. Certify that FATCA code(s) entered on this form (if any) indicating that y exempt from the FATCA reporting, is correct. See *What is FATCA reporting?* page 2 for further information.

Scanned by CamScanner

CITY OF RIVIERA BEACH

CHECK REQUEST

DATE: 4/26/17

VENDOR NO.

PAYABLE TO: PALM BEACH CHILDREN'S CHORUS
Mail to:
ADDRESS: 800 VILLAGE SQUARE CROSSING, STE 319
CITY: PALM BEACH GARDENS, FL 33410
Phone: 561-444-8455
EMAIL: INFO@PBCHILDRENSCHORUS.ORG

INVOICE # **5.3.17**
INVOICE #
INVOICE #
INVOICE #
INVOICE #
INVOICE #
INVOICE #
INVOICE #
INVOICE #
INVOICE #

ACCOUNT NUMBER	AMOUNT
130-0101-511-6-8301	800.00

Job Code

REVENUE OR
GEN. LEDGER

TOTAL **$800.00**

OTHER INFORMATION:

MAYOR MASTERS IS SUPPORTING THE PALM BEACH CHILDREN'S CHORUS FOR ITS MUSICAL EXCELLENCE IN BEING SELECTED AS THE ONLY YOUTH CHORUS IN THE STATE OF FLORIDA TO PERFORM THIS JUNE AT THE 2017 CHORAL CONVERGENCE FESTIVAL IN NEW YORK AT THE PRESTIGOUS CARNEGIE HALL. THERE ARE NINE STUDENTS IN THE CHORUS FROM RIVIERA BEACH.

REMARKS:

INSTRUCTIONS: 1. Send 1 copy to Finance (not to be returned)
2. Documentation MUST accompany REQUEST (Stapled to Check Request)
3. Letters, or Other Transmittal Information to the Vendor must accompany Request (with paper clip)
4. If check is to be picked up; Put at top of request "TO BE PICKED UP" Make a copy of the request for remittance

APPR. BY DEPT. HEAD [signature]

APPR. BY FINANCE DIR.

INPUT

VERIFIED

REVISED 1-31-07

CITY OF RIVIERA BEACH CITY COUNCIL
AGENDA ITEM SUMMARY

Meeting Date: 5/3/2017

Agenda Category: REGULAR

Subject: YOUTH RECREATION ASSOCIATION OF PBC's 65TH MEMORIAL COMMUNITY AWARENESS DAY

Recommendation/Motion: RECOMMEND APPROVAL

Originating Dept	MAYOR	**Costs**	$900
User Dept.	MAYOR	**Funding Source**	
Advertised	No	**Budget Account Number**	130-0101-511-6-8301
Date			
Paper			
Affected Parties	Notified		

Background/Summary:

THE YOUTH RECREATION ASSOCIATION OF PALM BEACH COUNTY CONTINUES IT TRADITION OF BRINGING THE COMMUNITY TOGETHER FOR A DAY OF FAMILY FUN AND FOOD WHILE DISCUSSING WAYS TO ERADICATE CRIME AND MAKE THE STREETS OF RIVIERA BEACH SAFER. YRA IS PARTNERING ONCE AGAIN WITH MOTHERS AGAINST MURDERERS ASSOCIATION FOR THIS EVENT AS IT HAS NOW FOR MORE THAN A DOZEN YEARS.

Fiscal Years
Capital Expenditures
Operating Costs
External Revenues
Program Income (city)
In-kind Match (city)
Net Fiscal Impact
NO. Additional FTE Positions (cumulative)

III. Review Comments

A. Finance Department Comments:

B. Purchasing/Intergovernmental Relations/Grants Comments:

C. Department Director Review:

Contract Start Date

Contract End Date

Renewal Start Date

Renewal End Date

Number of 12 month terms this renewal

Dollar Amount

Contractor Company Name

Contractor Contact

Contractor Address

Contractor Phone Number

Contractor Email

Type of Contract

Describe

ATTACHMENTS:

File Name	Description	Upload Date	Type
CB_Request_5.3.17.pdf	65TH MEMORIAL COMMUNITY AWARENESS DAY	4/27/2017	Cover Memo

REVIEWERS:

Department	Reviewer	Action	Date
Mayor	Mitchell, Dorothy	Approved	5/2/2017 - 2:11 PM

Waste Management Community Benefits Request for Donations

The City of Riviera Beach, in conjunction with Waste Management Inc. of Florida, has established a Community Benefits Policy. Under the Policy each elected official shall be entitled to designate funds to support approved public projects for public purposes. Public purposes include, but are not limited to, charitable events, not-for-profit organizational events or programs and City functions or projects (which may include contributions to the City's Scholarship Fund or the City's Housing Trust Fund). All requests for donations must be presented to the City Council and approved by a majority of the City Council. The City will attempt to process all requests within fourteen (14) days of City Council approval.

Ineligible uses include the purchase of tables at events, campaign contributions, or payment for salaries or operational expenses. Funds cannot be used to cover an elected official's travel, meals, or for his or her personal benefit or gain or for the personal gain of relatives as defined by City Code, the Palm Beach County Code of Ethics, or state statues, as applicable. Funds cannot be given to an entity/agency/organization for which the elected official is a director or officer.

Name of Elected Official Sponsoring Donation: **Mayor Thomas A. Masters**

Legal Name of Organization: YOUTH RECREATION ASSOCIATION OF PBC

Program/ Activity Name: 65TH MEMORIAL COMMUNITY AWARENESS DAY

Requested Amount: **$900.00**

Briefly describe the Program/Activity below **and** attach (1) letter of request or a more detailed description of the Program/Activity; (2) non-profit paperwork and (3) w-9 IRS form:

YRA CONTINUES THE TRADITION OF BRINGING THE COMMUNITY TOGETHER FOR A DAY OF FUN AND FOOD WHILE DISCUSSING WAYS TO ERADICATE CRIME AND MAKING OUR STREETS SAFER. YRA IS PARTNERING WITH MOTHERS AGAINST MURDERERS FOR THIS ANNUAL EVENT.

Mailing Address: 3005 BERNADO LANE City: RB State: FL Zip: 33407

Contact Person(s): DAN CALLOWAY

Phone: 561-848-4991 Fax:

Email Address: ARTIEJMAMA@AOL.COM

Signature of Authorized Official: Dan Calloway

Name of Authorized Official: DAN CALLOWAY Date: 4/26/17

******Return the form to the Elected Official or the Legislative Office for processing.**

Waste Management Community Benefits Request for Donations Approval by Elected Official

I, Thomas A. Masters hereby certify that the donation to Youth Recreation Association complies with the City's Community Benefits Policy. I further certify that: (1) I am not an officer, director, partner, proprietor, employee, subcontractor or agent of the organization, its parent organization or subsidiary and I do not have any contractual relationship with or other obligation with to the organization its parent organization or subsidiary; (2) I have no relatives or business associates (as those terms are defined in section 112.312, Florida Statutes) who are officers, directors, partners, proprietors, employees, subcontractors or agents of the organization, its parent organization or subsidiary; (3) The disbursement of the foregoing amount will not inure to my special gain or loss or to the special gain or loss of my relatives or my business associates; and (4) I am not aware of any conflict of interest the disbursement of the foregoing amount to the organization ~~will create~~ for the City of Riviera Beach or myself.

Signature of Elected Official: TM Date: 4/26/17

Amount Approved: $ 900.00

City Council Action

☐ Approved ☐ Disapproved

Chairperson's Signature: _____ Date: _____

Revised November 2011

YOUTH RECREATION ASSOCIATION
OF PALM BEACH COUNTY

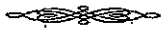

FOUNDED 1965

ATHLETIC DIRECTOR
Dan Calloway

PRESIDENT
Derrick McCray

VICE-PRESIDENT
Don Wilson

TREASURER
Walter Morrow

SECRETARY
Deirdre M. Jacobs

ASSISTANT SECRETARY
Kathy Groover

ASST. ATHLETIC DIRECTOR
Dennis Hanna

BUSINESS MANAGER
James Irving

LEGAL ADVISOR
William Contole

HISTORIAN
Clark Martin

FUNDRAISING
Jeff Koons
Don Donaugher
Beverly Morrison

EVENT COORDINATORS
Tucker Fredrickson
Mothers Against Murderers Association
Artie Williams
Angela Williams

COLLEGE RECRUITMENT
Abe Elam

AAU BASKETBALL
Brandon Arnette

GOLF TOURNAMENT
Chris Clark
Larry Evans
Katherine Waldron

BOARD OF DIRECTORS
Pastor Scott Arnold
Rev. Philip Braziel
Mary Degraffenreidt
Tucker Fredrickson
Dorthenia Lewis
Bucky McGann
Rev. Leroy Parish
Leodis Sanders
Lovie Scott
Leon Smith
Edward Walker
Allan Winn

April 6, 2017

Dear Supporters:

The Youth Recreation Association (Y.R.A.) and Mothers Against Murderers Association (M.A.M.A.) are requesting your participation in the **65th Memorial Community Awareness Day** being held at Goodmark Park, Riviera Beach on Saturday, May 27th from Noon until 9:00pm.

We are continuing our tradition of bringing the community together for a great day of fun and food while doing our part to eradicate crime. Now more than ever we need to unify and make our streets safer.

The following items are required to make this a fun, informative and productive day in the park:

20 case Ribs	*15 case Chicken*	*8 case Hot Dogs*
300# Fish	*300# Peanuts*	*Baked Beans*
Mac & Cheese	*Popcorn*	*50 cases Soda*
50 Cakes & Pies	*Charcoal*	*Lighter Fluid/Sterno*
Condiments	*Cups*	*Napkins*
Plates	*Cutlery*	*Miscellaneous Items*

Our budget to make this a success is $21,500 and as always, your participation is warranted and appreciated. Any contribution financial or otherwise, that you can donate, will make a positive difference. Tax deductible contributions should be presented to the attention of: Dan Calloway, Youth Recreation Association, or Artie Williams, Mothers Against Murderers Association (M.A.M.A).

Should you have any questions or require additional information, feel free to contact me at 561-531-9184 or you may reach Artie Williams at 561-201-9358.

With best regards, I am,

Dan Calloway
Athletic Director

Both The Youth Recreation Association & [MAMA] Mothers Against Murderers Association, Inc. are registered 501(c) (3) non-profit organizations.

3005 Bernardo Lane, Riviera Beach, Florida 33407 • (561) 848-4991 • (561) 531-9184

FLORIDA

Consumer's Certificate of Exemption

Issued Pursuant to Chapter 212, Florida Statutes

DR-14
R. 10/15

Certificate Number	Effective Date	Expiration Date	Exemption Category
85-8012598324C-5	11/30/2016	11/30/2021	501(C)(3) ORGANIZATION

This certifies that

YOUTH RECREATION ASSOCIATION OF RIVIERA BEACH
3005 BERNARDO LN
RIVIERA BEACH FL 33407-1107

is exempt from the payment of Florida sales and use tax on real property rented, transient rental property rented, tangible personal property purchased or rented, or services purchased.

FLORIDA

Important Information for Exempt Organizations

DR-14
R. 10/15

1. You must provide all vendors and suppliers with an exemption certificate before making tax-exempt purchases. See Rule 12A-1.038, Florida Administrative Code (F.A.C.).

2. Your *Consumer's Certificate of Exemption* is to be used solely by your organization for your organization's customary nonprofit activities.

3. Purchases made by an individual on behalf of the organization are taxable, even if the individual will be reimbursed by the organization.

4. This exemption applies only to purchases your organization makes. The sale or lease to others of tangible personal property, sleeping accommodations, or other real property is taxable. Your organization must register, and collect and remit sales and use tax on such taxable transactions. Note: Churches are exempt from this requirement except when they are the lessor of real property (Rule 12A-1.070, F.A.C.).

5. It is a criminal offense to fraudulently present this certificate to evade the payment of sales tax. Under no circumstances should this certificate be used for the personal benefit of any individual. Violators will be liable for payment of the sales tax plus a penalty of 200% of the tax, and may be subject to conviction of a third-degree felony. Any violation will require the revocation of this certificate.

6. If you have questions regarding your exemption certificate, please contact the Exemption Unit of Account Management at 800-352-3671. From the available options, select "Registration of Taxes," then "Registration Information," and finally "Exemption Certificates and Nonprofit Entities." The mailing address is PO Box 6480, Tallahassee, FL 32314-6480.

Form **W-9**
(Rev. October 2007)
Department of the Treasury
Internal Revenue Service

Request for Taxpayer Identification Number and Certification

Give form to the requester. Do not send to the IRS.

Print or type
See Specific Instructions on page 2.

Name (as shown on your income tax return)
Youth Recreation Association of Riviera Beach

Business name, if different from above

Check appropriate box: ☐ Individual/Sole proprietor ☐ Corporation ☐ Partnership
☐ Limited liability company. Enter the tax classification (D=disregarded entity, C=corporation, P=partnership) ▶
☒ Other (see instructions) ▶ Association

☒ Exempt payee

Address (number, street, and apt. or suite no.)
3005 Bernardo Lane

Requester's name and address (optional)

City, state, and ZIP code
Riviera Beach, FL 33407

List account number(s) here (optional)

Part I Taxpayer Identification Number (TIN)

Enter your TIN in the appropriate box. The TIN provided must match the name given on Line 1 to avoid backup withholding. For individuals, this is your social security number (SSN). However, for a resident alien, sole proprietor, or disregarded entity, see the Part I instructions on page 3. For other entities, it is your employer identification number (EIN). If you do not have a number, see *How to get a TIN* on page 3.

Note. If the account is in more than one name, see the chart on page 4 for guidelines on whose number to enter.

Social security number

or

Employer identification number
65-0250058

Part II Certification

Under penalties of perjury, I certify that:

1. The number shown on this form is my correct taxpayer identification number (or I am waiting for a number to be issued to me), and
2. I am not subject to backup withholding because: (a) I am exempt from backup withholding, or (b) I have not been notified by the Internal Revenue Service (IRS) that I am subject to backup withholding as a result of a failure to report all interest or dividends, or (c) the IRS has notified me that I am no longer subject to backup withholding, and
3. I am a U.S. citizen or other U.S. person (defined below).

Certification Instructions. You must cross out item 2 above if you have been notified by the IRS that you are currently subject to backup withholding because you have failed to report all interest and dividends on your tax return. For real estate transactions, item 2 does not apply. For mortgage interest paid, acquisition or abandonment of secured property, cancellation of debt, contributions to an individual retirement arrangement (IRA), and generally, payments other than interest and dividends, you are not required to sign the Certification, but you must provide your correct TIN. See the instructions on page 4.

Sign Here Signature of U.S. person ▶ Dan W. Calloway Date ▶ 5/21/15

General Instructions

Section references are to the Internal Revenue Code unless otherwise noted.

Purpose of Form

A person who is required to file an information return with the IRS must obtain your correct taxpayer identification number (TIN) to report, for example, income paid to you, real estate transactions, mortgage interest you paid, acquisition or abandonment of secured property, cancellation of debt, or contributions you made to an IRA.

Use Form W-9 only if you are a U.S. person (including a resident alien), to provide your correct TIN to the person requesting it (the requester) and, when applicable, to:

1. Certify that the TIN you are giving is correct (or you are waiting for a number to be issued),

2. Certify that you are not subject to backup withholding, or

3. Claim exemption from backup withholding if you are a U.S. exempt payee. If applicable, you are also certifying that as a U.S. person, your allocable share of any partnership income from a U.S. trade or business is not subject to the withholding tax on foreign partners' share of effectively connected income.

Note. If a requester gives you a form other than Form W-9 to request your TIN, you must use the requester's form if it is substantially similar to this Form W-9.

Definition of a U.S. person. For federal tax purposes, you are considered a U.S. person if you are:

- An individual who is a U.S. citizen or U.S. resident alien,
- A partnership, corporation, company, or association created or organized in the United States or under the laws of the United States,
- An estate (other than a foreign estate), or
- A domestic trust (as defined in Regulations section 301.7701-7).

Special rules for partnerships. Partnerships that conduct a trade or business in the United States are generally required to pay a withholding tax on any foreign partners' share of income from such business. Further, in certain cases where a Form W-9 has not been received, a partnership is required to presume that a partner is a foreign person, and pay the withholding tax. Therefore, if you are a U.S. person that is a partner in a partnership conducting a trade or business in the United States, provide Form W-9 to the partnership to establish your U.S. status and avoid withholding on your share of partnership income.

The person who gives Form W-9 to the partnership for purposes of establishing its U.S. status and avoiding withholding on its allocable share of net income from the partnership conducting a trade or business in the United States is in the following cases:

- The U.S. owner of a disregarded entity and not the entity,

CITY OF RIVIERA BEACH CITY COUNCIL
AGENDA ITEM SUMMARY

Meeting Date: 5/3/2017

Agenda Category: CONSENT

Subject: MINORITY INITIATIVE NETWORK, INC. - $500 - CHAIR PRO TEM TONYA DAVIS JOHNSON - FOR PRIDEFEST SUNSPLASH ALLY APPRECIATION DAY EVENT HOSTED BY RODNEY RENARD ROBERTS, INC., MAY 13, 2017.

Recommendation/Motion:

Originating Dept	LEGISLATIVE - DISTRICT 3	**Costs**	$500
User Dept.	SAME	**Funding Source**	
Advertised	No	**Budget Account Number**	130-0101-511-3-8301
Date			
Paper			
Affected Parties	Not Required		

Background/Summary:

SEE ATTACHMENT

Fiscal Years
Capital Expenditures
Operating Costs
External Revenues
Program Income (city)
In-kind Match (city)
Net Fiscal Impact
NO. Additional FTE Positions (cumulative)

III. Review Comments

A. Finance Department Comments:

B. Purchasing/Intergovernmental Relations/Grants Comments:

C. Department Director Review:

Contract Start Date

Contract End Date

Renewal Start Date

Renewal End Date

Number of 12 month terms this renewal

Dollar Amount

Contractor Company Name

Contractor Contact

Contractor Address

Contractor Phone Number

Contractor Email

Type of Contract

Describe

ATTACHMENTS:

File Name	Description	Upload Date	Type
MINORITY_AIDS_INITIATIVE_NETWORK__INC._05032017.pdf	MINORITY AIDS INITIATIVE NETWORK, INC.	5/2/2017	Cover Memo

REVIEWERS:

Department	Reviewer	Action	Date
District 3	Mitchell, Dorothy	Approved	5/2/2017 - 1:57 PM

Riviera Beach- "Best Waterfront City In Which To Live, Work and Play"

Waste Management Community Benefits
Request for Donations

The City of Riviera Beach, in conjunction with Waste Management Inc. of Florida, has established a Community Benefits Policy. Under the Policy each elected official shall be entitled to designate funds to support approved public projects for public purposes. Public purposes include, but are not limited to, charitable events, not-for-profit organizational events or programs and City functions or projects (which may include contributions to the City's Scholarship Fund or the City's Housing Trust Fund). All requests for donations must be presented to the City Council and approved by a majority of the City Council. The City will attempt to process all requests within fourteen (14) days of City Council approval.

Ineligible uses include the purchase of tables at events, campaign contributions, or payment for salaries or operational expenses. Funds cannot be used to cover an elected official's travel, meals, or for his or her personal benefit or gain or for the personal gain of relatives as defined by City Code, the Palm Beach County Code of Ethics or State Statutes, as applicable. Funds cannot be given to an entity/agency/organization for which the elected official is a director or officer.

Name of Elected Official Sponsoring Donation: Tonya Davis Johnson, Councilperson

Legal Name of Organization: MINORITY AIDS INITIATIVE NETWORK, INC

Program/ Activity Name: Pridefest Sunsplash Ally Appreciation Day Event

Requested Amount: $ 1,000.00

Briefly describe the Program/Activity below **and** attach (1) letter of request or a more detailed description of the Program/Activity; (2) non-profit paperwork and (3) w-9 IRS form:
A public health event targeting the areas HIV impacted Afro American LGBT community. The event will have HIV outreach, music, and food; at the Riviera Beach Municipal Beach Park for 4 hours

Mailing Address: 1620 W 34th St

City: Riviera Beach State: Florida Zip: 33404

Contact Person(s): Elizabeth Robinson

Phone: (561) 201-4009 Fax: ( )

Email Address: elizabethperter@gmail.com

Name of Authorized Official: Elizabeth P. Robinson

Signature of Authorized Official: [signature] Date: 3/17/17

******Return the form to the Elected Official or the Legislative Office for processing.**

MAR 17 2017

Waste Management Community Benefits Request for Donations Approval by Elected Official

I, Tonya Davis Johnson, hereby certify that the donation to Minority Aids Initiative Network complies with the City's Community Benefits Policy. I further certify that: (1) I am not an officer, director, partner, proprietor, employee, subcontractor or agent of the organization, its parent organization or subsidiary and I do not have any contractual relationship with or other obligation to the organization, its parent organization or subsidiary; (2) I have no relatives or business associates (as those terms are defined in section 112.312, Florida Statutes) who are officers, directors, partners, proprietors, employees, subcontractors or agents of the organization, its parent organization or subsidiary; (3) The disbursement of the foregoing amount will not inure to my special gain or loss or to the special gain or loss of my relatives or my business associates; and (4) I am not aware of any conflict of interest the disbursement of the foregoing amount to the organization will create for the City of Riviera Beach or myself.

Signature of Elected Official: _____ Date: 5/1/17

Amount Approved by Elected Official: $ 500.00

City Council Action

☐ Approved ☐ Disapproved

Chairperson's Signature: _____ Date: _____

Revised March 2017

Saturday February 25, 2017

Commissioner Tonya Davis Johnson
600 W. Blue Heron Blvd
Riviera Beach, Fl 33404

Dear Commissioner Johnson:

Rodney Renard Roberts Inc. is hosting an "Ally Appreciation Day Party" in the City of Riviera Beach. The goal of this event is to show gratitude to public health resource and service oriented people, organizations, and their clients. Also, this event aims to draw close those who embrace our community's diversity, promote inclusion, equity, and the PRIDE of life.

The Party will be held at the Riviera Beach Municipal Beach Park located at 2401 N. Ocean Ave Riviera Beach, FL 33404. The time of this event is scheduled from **3:00 p.m. – 7:00 p.m.** on **Saturday, May 13, 2017.**

RRR, Inc. is respectfully requesting your in-kind support, presence and that of your organization. It is our goal to provide your organization with potential supporters and space to provide info about your services and the resources you provide.

We look forward to you helping to make this day a success. Knowing the public health resources that are in and around the area is vital to our overall goal to comprehensive public health.

Please feel free to call me, Rodney R. Roberts at 561-755-3320 with any questions or concerns.

Thank you in advance.

Sincerely,

Rodney R. Roberts
RRR, Inc
561-755-3320
The7Rob@gmail.com

Saturday February 25, 2017

Form **W-9**
(Rev. January 2003)
Department of the Treasury
Internal Revenue Service

Request for Taxpayer Identification Number and Certification

Give form to the requester. Do not send to the IRS.

Print or type
See Specific Instructions on page 2.

Name
MINORITY AIDS INITIATIVE NETWORK, INC

Business name, if different from above

Check appropriate box: ☐ Individual/ Sole proprietor ☒ Corporation ☐ Partnership ☐ Other ▶ ☐ Exempt from backup withholding

Address (number, street, and apt. or suite no.)
1216 Pioneer Rd

Requester's name and address (optional)

City, state, and ZIP code
MANGONIA PARK FL 33407

List account number(s) here (optional)

Part I Taxpayer Identification Number (TIN)

Enter your TIN in the appropriate box. For individuals, this is your social security number (SSN). **However, for a resident alien, sole proprietor, or disregarded entity, see the Part I instructions on page 3.** For other entities, it is your employer identification number (EIN). If you do not have a number, see **How to get a TIN** on page 3.

Note: *If the account is in more than one name, see the chart on page 4 for guidelines on whose number to enter.*

Social security number
| | | | | | | | | |

or

Employer identification number
2 7 1 4 2 5 7 6 2

Part II Certification

Under penalties of perjury, I certify that:

1. The number shown on this form is my correct taxpayer identification number (or I am waiting for a number to be issued to me), **and**
2. I am not subject to backup withholding because: **(a)** I am exempt from backup withholding, or **(b)** I have not been notified by the Internal Revenue Service (IRS) that I am subject to backup withholding as a result of a failure to report all interest or dividends, or **(c)** the IRS has notified me that I am no longer subject to backup withholding, **and**
3. I am a U.S. person (including a U.S. resident alien).

Certification instructions. You must cross out item **2** above if you have been notified by the IRS that you are currently subject to backup withholding because you have failed to report all interest and dividends on your tax return. For real estate transactions, item **2** does not apply. For mortgage interest paid, acquisition or abandonment of secured property, cancellation of debt, contributions to an individual retirement arrangement (IRA), and generally, payments other than interest and dividends, you are not required to sign the Certification, but you must provide your correct TIN. (See the instructions on page 4.)

Sign Here Signature of U.S. person ▶ [signature] Date ▶ 3/17/17

Purpose of Form

A person who is required to file an information return with the IRS, must obtain your correct taxpayer identification number (TIN) to report, for example, income paid to you, real estate transactions, mortgage interest you paid, acquisition or abandonment of secured property, cancellation of debt, or contributions you made to an IRA.

U.S. person. Use Form W-9 only if you are a U.S. person (including a resident alien), to provide your correct TIN to the person requesting it (the requester) and, when applicable, to:

1. Certify that the TIN you are giving is correct (or you are waiting for a number to be issued),

2. Certify that you are not subject to backup withholding, or

3. Claim exemption from backup withholding if you are a U.S. exempt payee.

Note: *If a requester gives you a form other than Form W-9 to request your TIN, you must use the requester's form if it is substantially similar to this Form W-9.*

Foreign person. If you are a foreign person, use the appropriate Form W-8 (see **Pub. 515,** Withholding of Tax on Nonresident Aliens and Foreign Entities).

Nonresident alien who becomes a resident alien. Generally, only a nonresident alien individual may use the terms of a tax treaty to reduce or eliminate U.S. tax on certain types of income. However, most tax treaties contain a provision known as a "saving clause." Exceptions specified in the saving clause may permit an exemption from tax to continue for certain types of income even after the recipient has otherwise become a U.S. resident alien for tax purposes.

If you are a U.S. resident alien who is relying on an exception contained in the saving clause of a tax treaty to claim an exemption from U.S. tax on certain types of income, you must attach a statement that specifies the following five items:

1. The treaty country. Generally, this must be the same treaty under which you claimed exemption from tax as a nonresident alien.

2. The treaty article addressing the income.

3. The article number (or location) in the tax treaty that contains the saving clause and its exceptions.

4. The type and amount of income that qualifies for the exemption from tax.

5. Sufficient facts to justify the exemption from tax under the terms of the treaty article.

CITY OF RIVIERA BEACH CITY COUNCIL
AGENDA ITEM SUMMARY

Meeting Date: 5/3/2017

Agenda Category: CONSENT

Subject: OPERATION HOPE, INC. - $500 - CHAIR PRO TEM TONYA DAVIS JOHNSON - FOR 2017 AFTER-SCHOOL TUTORIAL / SUMMER CAMP,

Recommendation/Motion:

Originating Dept	LEGISLATIVE - DISTRICT 3	**Costs**	$500
User Dept.	SAME	**Funding Source**	
Advertised	No	**Budget Account Number**	130-0101-511-3-8301
Date			
Paper			
Affected Parties	Not Required		

Background/Summary:

SEE ATTACHMENT

Fiscal Years
Capital Expenditures
Operating Costs
External Revenues
Program Income (city)
In-kind Match (city)
Net Fiscal Impact
NO. Additional FTE Positions (cumulative)

III. Review Comments

A. Finance Department Comments:

B. Purchasing/Intergovernmental Relations/Grants Comments:

C. Department Director Review:

Contract Start Date

Contract End Date

Renewal Start Date

Renewal End Date

Number of 12 month terms this renewal

Dollar Amount

Contractor Company Name

Contractor Contact

Contractor Address

Contractor Phone Number

Contractor Email

Type of Contract

Describe

ATTACHMENTS:

File Name	Description	Upload Date	Type
OPERATION_HOPE__INC.__05032017.pdf	OPERATION HOPE, INC. 05032017	5/2/2017	Cover Memo

REVIEWERS:

Department	Reviewer	Action	Date
District 3	Mitchell, Dorothy	Approved	5/2/2017 - 2:10 PM

Riviera Beach- "Best Waterfront City In Which To Live, Work and Play"

Waste Management Community Benefits
Request for Donations

The City of Riviera Beach, in conjunction with Waste Management Inc. of Florida, has established a Community Benefits Policy, as amended in November 2011. Under the Policy each elected official shall be entitled to designate up to $15,000 per year ($7,500 on October 1st and $7,500 on April 1st) for public purposes. Public purposes include, but are not limited to, charitable events, not-for-profit organizational events or programs and City functions or projects (which may include contributions to the City's Scholarship Fund or the City's Housing Trust Fund). All requests for donations must be presented to the City Council and approved by a majority of the City Council. The City will attempt to process all requests within fourteen (14) days of City Council approval.

Ineligible uses include the purchase of tables at events, campaign contributions, or payment for salaries or operational expenses. Funds cannot be used to cover an elected official's travel, meals, or for his or her personal benefit or gain or for the personal gain of relatives as defined by City Code, the Palm Beach County Code of Ethics, or state statues, as applicable. Funds cannot be given to an entity/agency/organization for which the elected official is a director or officer.

Name of Elected Official Sponsoring Donation: **Councilwoman Tonya Davis-Johnson**

Legal Name of Organization: Operation Hope, Inc..

Program/ Activity Name: 2017 – After School Tutorial/Summer Camp Requested Amount: **$500.00**

Briefly describe the Program/Activity below **and** attach (1) letter of request or a more detailed description of the Program/Activity; (2) non-profit paperwork and (3) w-9 IRS form:

Each year we have a summer camp for 30 or more children/youth of Riviera Beach, (see attach letter).

Mailing Address: 1253 10th Street City: Lake Park State: FL Zip: 33403

Contact Person(s): Kenneth Bowers

Phone: (561) 396-7969 Fax: (561) 282-3498

Email Address: operationhopeinc@aol.com

Name of Authorized Official: Kenneth Bowers

Signature of Authorized Official: Kenneth Bowers Date: 2-3-17

******Return the form to the Elected Official or the Legislative Office for processing.**

Riviera Beach- "Best Waterfront City In Which To Live, Work and Play"

Waste Management Community Benefits Request for Donations Approval by Elected Official

I, Councilwoman Tonya Davis-Johnson hereby certify that the donation to Operation Hope, Inc, complies with the City's Community Benefits Policy. I further certify that: (1) I am not an officer, director, partner, proprietor, employee, subcontractor or agent of the organization, its parent organization or subsidiary and I do not have any contractual relationship with or other obligation with to the organization its parent organization or subsidiary; (2) I have no relatives or business associates (as those terms are defined in section 112.312, Florida Statutes) who are officers, directors, partners, proprietors, employees, subcontractors or agents of the organization, its parent organization or subsidiary; (3) The disbursement of the foregoing amount will not inure to my special gain or loss or to the special gain or loss of my relatives or my business associates; and (4) I am not aware of any conflict of interest the disbursement of the foregoing amount to the organization will create for the City of Riviera Beach or myself.

Signature of Elected Official: _____ Date: 5/1/17

Amount Approved: $ 500.00 :

City Council Action

☐ Approved ☐ Disapproved

Chairperson's Signature: _____ Date: _____

Revised November 2011

OPERATION HOPE, INC.

"KEEPING DREAMS ALIVE"

February 2, 2017

Councilwoman Tonya Davis-Johnson
City of Riviera Beach City Hall
600 West Blue Heron Boulevard
Riviera Beach, FL 33404

Re: 2017 Operation Hope Summer Camp

Dear Councilwoman Davis-Johnson:

Operation Hope, Inc., is starting to put together our Summer Camp for children. This program is offered to the youth of the homeless or disadvantaged in our community. Last summer Operation Hope, was host to 67 wonderful children ranging in ages from 5 to 17. The Camp will open starting, June 5, and continues for 10 weeks ending August 11, 2017. Because of your generous donations these children have a chance to be in a safe and fun environment during the long and hot days of summer.

Operation Hope camp starts, at 7:30 a.m. and runs to 5:30 p.m. Monday through Friday. Because of your generosity, we are able to provide activities such as swimming, bowling, movies, also and most important, a healthy breakfast, lunch and snack are provided to each child. In the afternoon, we have fun with all types of arts and crafts projects. We also try to get the campers to Lion Country Safari for a great day of seeing the lions and tigers and they especially enjoy the petting zoo and the turtles. The campers then celebrate their last day of camp by attending our annual picnic held at Okeeheelee Park in West Palm m Beach. Other camps and preschools throughout Palm Beach County are invited to join in the festivities. Almost 450 children attended, ate hamburgers and hot dogs, cold drinks. It is such a joy to see all the smiling faces.

It is truly an honor and pleasure to serve the youth in our community, and we would like to continue to offer this service. Of course, we could not do this without your support. We would like to take this opportunity to thank you and relay how much we appreciated your past support. These funds are desperately needed. We are asking our supporters to consider a tax deductible one-time donation to our organization of $1,000. If you are unable to pledge $1,000, we would like to extend our sincere gratitude for a donation in any amount. Your donation goes a long way (in helping these children in need). Please return your donation in the self-addressed envelope provided for your convenience by March 10, 2017. Again, thank you for thinking of us again this year. Your donation(s) and/or contribution(s) will be greatly appreciated. If you need any further information, please feel free to contact us at (561) 396-7969. Thanking you in advance for your support in this endeavor.

Sincerely,

Kenneth Bowers

KENNETH BOWERS
Executive Director

xc: File

1253 10TH Street, Lake Park, FL 33403

RECEIVED
FEB 03 2017
BY:

INTERNAL REVENUE SERVICE
P. O. BOX 2508
CINCINNATI, OH 45201

DEPARTMENT OF THE TREASURY

Date: SEP 01 2016

OPERATION HOPE INC
PO BOX 10443
RIVIERA BEACH, FL 33419-0000

Employer Identification Number:
65-0171969
DLN:
26053637002266
Contact Person:
CUSTOMER SERVICE ID# 31954
Contact Telephone Number:
(877) 829-5500
Accounting Period Ending:
December 31
Public Charity Status:
170(b)(1)(A)(vi)
Form 990/990-EZ/990-N Required:
Yes
Effective Date of Exemption:
August 22, 2016
Contribution Deductibility:
Yes
Addendum Applies:
No

Dear Applicant:

We're pleased to tell you we determined you're exempt from federal income tax under Internal Revenue Code (IRC) Section 501(c)(3). Donors can deduct contributions they make to you under IRC Section 170. You're also qualified to receive tax deductible bequests, devises, transfers or gifts under Section 2055, 2106, or 2522. This letter could help resolve questions on your exempt status. Please keep it for your records.

Organizations exempt under IRC Section 501(c)(3) are further classified as either public charities or private foundations. We determined you're a public charity under the IRC Section listed at the top of this letter.

Based on the information you submitted on your application, we approved your request for reinstatement under Section 7 of Revenue Procedure 2014-11. Your effective date of exemption, as listed at the top of this letter, is the submission date of your application.

If we indicated at the top of this letter that you're required to file Form 990/990-EZ/990-N, our records show you're required to file an annual information return (Form 990 or Form 990-EZ) or electronic notice (Form 990-N, the e-Postcard). If you don't file a required return or notice for three consecutive years, your exempt status will be automatically revoked.

If we indicated at the top of this letter that an addendum applies, the enclosed addendum is an integral part of this letter.

For important information about your responsibilities as a tax-exempt organization, go to www.irs.gov/charities. Enter "4221-PC" in the search bar

CITY OF RIVIERA BEACH CITY COUNCIL
AGENDA ITEM SUMMARY

Meeting Date: 5/3/2017

Agenda Category: PRESENTATIONS

Subject: FLORIDA A&M UNIVERSITY NATIONAL ALUMNI ASSOCIATION The faculty is committed to educating students at the undergraduate, graduate, doctoral and professional levels, preparing graduates to apply their knowledge, critical thinking skills and creativity in their service to society. FAMU's distinction as a doctoral/research institution will continue to provide mechanisms to address emerging issues through local and global partnerships.

Recommendation/Motion: REQUEST COMMUNITY BENEFITS FUNDS IN THE AMOUNT OF $600.00

Originating Dept	FLORIDA A&M UNIVERSITY NATIONAL ALUMNI ASSOCIATION	**Costs**	$600.00
User Dept.	LEGISLATIVE	**Funding Source**	
Advertised	No	**Budget Account Number**	130-0101-511-5-8301
Date			
Paper			
Affected Parties	Not Required		

Background/Summary:

FLORIDA A&M UNIVERSITY NATIONAL ALUMNI IS ASSOCIATION IS ASKING FOR SUPPORT IN SCHOLARSHIP FOR COLLEGE

Fiscal Years	2017
Capital Expenditures	
Operating Costs	
External Revenues	
Program Income (city)	
In-kind Match (city)	
Net Fiscal Impact	
NO. Additional FTE Positions (cumulative)	

III. Review Comments

A. Finance Department Comments:

B. Purchasing/Intergovernmental Relations/Grants Comments:

C. Department Director Review:

Contract Start Date

Contract End Date

Renewal Start Date

Renewal End Date

Number of 12 month terms this renewal

Dollar Amount

Contractor Company Name

Contractor Contact

Contractor Address

Contractor Phone Number

Contractor Email

Type of Contract

Describe

ATTACHMENTS:

File Name	Description	Upload Date	Type
FAMU_Scholarship.pdf	famu	4/26/2017	Cover Memo

REVIEWERS:

Department	Reviewer	Action	Date
Purchasing	Jones, Danny	Approved	4/26/2017 - 8:12 PM

Riviera Beach- "Best Waterfront City In Which To Live, Work and Play"

Waste Management Community Benefits
Request for Donations

The City of Riviera Beach, in conjunction with Waste Management Inc. of Florida, has established a Community Benefits Policy, as amended in November 2011. Under the Policy each elected official shall be entitled to designate up to $15,000 per year ($7,500 on October 1st and $7,500 on April 1st) for public purposes. Public purposes include, but are not limited to, charitable events, not-for-profit organizational events or programs and City functions or projects (which may include contributions to the City's Scholarship Fund or the City's Housing Trust Fund). All requests for donations must be presented to the City Council and approved by a majority of the City Council. The City will attempt to process all requests within fourteen (14) days of City Council approval.

Ineligible uses include the purchase of tables at events, campaign contributions, or payment for salaries or operational expenses. Funds cannot be used to cover an elected official's travel, meals, or for his or her personal benefit or gain or for the personal gain of relatives as defined by City Code, the Palm Beach County Code of Ethics, or state statutes, as applicable. Funds cannot be given to an entity/agency/organization for which the elected official is a director or officer.

Name of Elected Official Sponsoring Donation: Terence D. Davis

Legal Name of Organization: Florida A&M University National Alumni Association

Program/ Activity Name: FAMU Alumni Association Requested Amount: $ 600.00

Briefly describe the Program/Activity below and attach (1) a letter of request or a more detailed description of the Program/Activity; (2) non-profit status paperwork and (3) w-9 IRS form:

Florida A&M University National Alumni Association is 501c(3) organization. The Palm Beach County Alumni need you now more than ever. We need your support to protect and preserve our beloved Florida A&M Universities Alumni, Family, Students, Parents of Students, and Supporters, the Palm Beach County. Our main purpose is to continue in the tradition of "Excellence With Caring" by becoming active in the community, providing

Mailing Address: P.O. BOX 2305

City: West Palm Beach, State: FL Zip: 33402

Contact Person(s): Lesha Roundtree

Phone: 561-577--6022 Fax:

Email Address: famupbca@gmail.com

Name of Authorized Official: Lesha Roundtree

Signature of Authorized Official: Date: 4/20/2017

****Return the form to the Elected Official or the Legislative Office for processing.**

Waste Management Community Benefits Request for Donations Approval by Elected Official

I, Terence D. Davis, hereby certify that the donation to Florida A&M University National Alumni Association complies with the City's Community Benefits Policy. I further certify that: (1) I am not an officer, director, partner, proprietor, employee, subcontractor or agent of the organization, its parent organization or subsidiary and I do not have any contractual relationship with or other obligation with to the organization its parent organization or subsidiary; (2) I have no relatives or business associates (as those terms are defined in section 112.312, Florida Statutes) who are officers, directors, partners, proprietors, employees, subcontractors or agents of the organization, its parent organization or subsidiary; (3) The disbursement of the foregoing amount will not inure to my special gain or loss or to the special gain or loss of my relatives or my business associates; and (4) I am not aware of any conflict of interest the disbursement of the foregoing amount to the organization will create for the City of Riviera Beach or myself.

Signature of Elected Official: _____ Date: 4/20/2017

Amount Approved by Elected Official: $600.00

City Council Action

☐ Approved ☐ Disapproved

Chairperson's Signature: _____ Date: _____

Revised November 2011

Call Us (850) 599-3861

Menu

Florida A&M University National Alumni Association

Search

FAMU NAA Scholarship Program

The Florida A&M University National Alumni Association is now accepting applications for the 2017 NAA Scholarship Program. Communication will be sent by the scholarship committee chair to each recipient receiving a scholarship award and the amount awarded. All scholarships are based upon available funds.

Available scholarships for incoming students to FAMU include the Academic Achievement Award, the Herman Davis Award, the High School Award, and the Book Stipend Award. The application form for incoming freshman can be

found by clicking here. The complete listing of awards and criteria for those awards for freshmen can be found here.

Available scholarships for current students at FAMU include the College Sophomore Award, the College Junior Award, the College Senior Award, and the Book Stipend Award. The application form and instructions for applying for NAA scholarships for college students can be found by clicking here.

You can view a collection of frequently asked questions as well as instructions for applying to these scholarships here. **Applications are due by June 15, 2017.**

If you have any questions, please contact the scholarship committee chair at scholarship@famunaa.org.

Share this:

Email Tweet Share 45

1,887 Members | **15.9K** Followers | **478** Articles

Join Now

Join The FAMU NAA Today!

Recent Posts

2017 Northeast Region Scholarship

FAMU NAA Northeast Region Scholarship The Northeast Region (NER) of the Florida A&M University National Alumni Association,

FLORIDA DEPARTMENT OF REVENUE

Consumer's Certificate of Exemption

DR-14
R. 04/11

Issued Pursuant to Chapter 212, Florida Statutes

Certificate Number	Effective Date	Expiration Date	Exemption Category
85-8012530413C-2	02/28/2016	02/28/2021	501(C)(3) ORGANIZATION

This certifies that

FLORIDA A&M UNIVERSITY NATIONAL
ALUMNI ASSOCIATION
1810 SOUTH ADAMS ST
TALLAHASSEE FL 32307-0001

is exempt from the payment of Florida sales and use tax on real property rented, transient rental property rented, tangible personal property purchased or rented, or services purchased.

FLORIDA DEPARTMENT OF REVENUE

Important Information for Exempt Organizations

DR-14
R. 04/11

1. You must provide all vendors and suppliers with an exemption certificate before making tax-exempt purchases. See Rule 12A-1.038, Florida Administrative Code (F.A.C.).

2. Your *Consumer's Certificate of Exemption* is to be used solely by your organization for your organization's customary nonprofit activities.

3. Purchases made by an individual on behalf of the organization are taxable, even if the individual will be reimbursed by the organization.

4. This exemption applies only to purchases your organization makes. The sale or lease to others of tangible personal property, sleeping accommodations, or other real property is taxable. Your organization must register, and collect and remit sales and use tax on such taxable transactions. Note: Churches are exempt from this requirement except when they are the lessor of real property (Rule 12A-1.070, F.A.C.).

5. It is a criminal offense to fraudulently present this certificate to evade the payment of sales tax. Under no circumstances should this certificate be used for the personal benefit of any individual. Violators will be liable for payment of the sales tax plus a penalty of 200% of the tax, and may be subject to conviction of a third-degree felony. Any violation will require the revocation of this certificate.

6. If you have questions regarding your exemption certificate, please contact the Exemption Unit of Account Management at 800-352-3671. From the available options, select "Registration of Taxes," then "Registration Information," and finally "Exemption Certificates and Nonprofit Entities." The mailing address is PO Box 6480, Tallahassee, FL 32314-6480.

Form **W-9**
(Rev. December 2014)
Department of the Treasury
Internal Revenue Service

Request for Taxpayer Identification Number and Certification

Give Form to the requester. Do not send to the IRS.

Print or type
See Specific Instructions on page 2.

1 Name (as shown on your income tax return). Name is required on this line; do not leave this line blank.
FLORIDA A&M ALUMNI ASSOCIATION OF PALM BEACH COUNTY, INC

2 Business name/disregarded entity name, if different from above

3 Check appropriate box for federal tax classification; check only one of the following seven boxes:
☐ Individual/sole proprietor or single-member LLC ☐ C Corporation ☐ S Corporation ☐ Partnership ☐ Trust/estate
☐ Limited liability company. Enter the tax classification (C=C corporation, S=S corporation, P=partnership) ▶
Note. For a single-member LLC that is disregarded, do not check LLC; check the appropriate box in the line above for the tax classification of the single-member owner.
☑ Other (see instructions) ▶ NON PROFIT ORGANIZATION

4 Exemptions (codes apply only to certain entities, not individuals; see instructions on page 3):
Exempt payee code (if any)
Exemption from FATCA reporting code (if any)
(Applies to accounts maintained outside the U.S.)

5 Address (number, street, and apt. or suite no.)
POST OFFICE BOX 2305

Requester's name and address (optional)

6 City, state, and ZIP code
WEST PALM BEACH, FL 33402

7 List account number(s) here (optional)

Part I Taxpayer Identification Number (TIN)

Enter your TIN in the appropriate box. The TIN provided must match the name given on line 1 to avoid backup withholding. For individuals, this is generally your social security number (SSN). However, for a resident alien, sole proprietor, or disregarded entity, see the Part I instructions on page 3. For other entities, it is your employer identification number (EIN). If you do not have a number, see *How to get a TIN* on page 3.

Note. If the account is in more than one name, see the instructions for line 1 and the chart on page 4 for guidelines on whose number to enter.

Social security number
☐☐☐ - ☐☐ - ☐☐☐☐

or

Employer identification number
6 5 - 0 4 3 9 5 9 2

Part II Certification

Under penalties of perjury, I certify that:

1. The number shown on this form is my correct taxpayer identification number (or I am waiting for a number to be issued to me); and
2. I am not subject to backup withholding because: (a) I am exempt from backup withholding, or (b) I have not been notified by the Internal Revenue Service (IRS) that I am subject to backup withholding as a result of a failure to report all interest or dividends, or (c) the IRS has notified me that I am no longer subject to backup withholding; and
3. I am a U.S. citizen or other U.S. person (defined below); and
4. The FATCA code(s) entered on this form (if any) indicating that I am exempt from FATCA reporting is correct.

Certification instructions. You must cross out item 2 above if you have been notified by the IRS that you are currently subject to backup withholding because you have failed to report all interest and dividends on your tax return. For real estate transactions, item 2 does not apply. For mortgage interest paid, acquisition or abandonment of secured property, cancellation of debt, contributions to an individual retirement arrangement (IRA), and generally, payments other than interest and dividends, you are not required to sign the certification, but you must provide your correct TIN. See the instructions on page 3.

Sign Here | **Signature of U.S. person ▶** | **Date ▶**

General Instructions

Section references are to the Internal Revenue Code unless otherwise noted.

Future developments. Information about developments affecting Form W-9 (such as legislation enacted after we release it) is at *www.irs.gov/fw9*.

Purpose of Form

An individual or entity (Form W-9 requester) who is required to file an information return with the IRS must obtain your correct taxpayer identification number (TIN) which may be your social security number (SSN), individual taxpayer identification number (ITIN), adoption taxpayer identification number (ATIN), or employer identification number (EIN), to report on an information return the amount paid to you, or other amount reportable on an information return. Examples of information returns include, but are not limited to, the following:

- Form 1099-INT (interest earned or paid)
- Form 1099-DIV (dividends, including those from stocks or mutual funds)
- Form 1099-MISC (various types of income, prizes, awards, or gross proceeds)
- Form 1099-B (stock or mutual fund sales and certain other transactions by brokers)
- Form 1099-S (proceeds from real estate transactions)
- Form 1099-K (merchant card and third party network transactions)
- Form 1098 (home mortgage interest), 1098-E (student loan interest), 1098-T (tuition)
- Form 1099-C (canceled debt)
- Form 1099-A (acquisition or abandonment of secured property)

Use Form W-9 only if you are a U.S. person (including a resident alien), to provide your correct TIN.

If you do not return Form W-9 to the requester with a TIN, you might be subject to backup withholding. See *What is backup withholding?* on page 2.

By signing the filled-out form, you:

1. Certify that the TIN you are giving is correct (or you are waiting for a number to be issued),
2. Certify that you are not subject to backup withholding, or
3. Claim exemption from backup withholding if you are a U.S. exempt payee. If applicable, you are also certifying that as a U.S. person, your allocable share of any partnership income from a U.S. trade or business is not subject to the withholding tax on foreign partners' share of effectively connected income, and
4. Certify that FATCA code(s) entered on this form (if any) indicating that you are exempt from the FATCA reporting, is correct. See *What is FATCA reporting?* on page 2 for further information.

CITY OF RIVIERA BEACH CITY COUNCIL
AGENDA ITEM SUMMARY

Meeting Date: 5/3/2017

Agenda Category: PRESENTATIONS

Subject:

Recommendation/Motion: REQUEST COMMUNITY BENEFITS FUNDS IN THE AMOUNT OF $600.00

Originating Dept	YOUTH EMPOWERMENT GED EDUCATION PROGRAM	**Costs**	$600.00
User Dept.	LEGISLATIVE	**Funding Source**	
Advertised	No	**Budget Account Number**	130-0101-511-5-8301
Date			
Paper			
Affected Parties	Notified		

Background/Summary:

YOUTH EMPOWERMENT GED PROGRAM ASSIST RIVIERA BEACH CITIZENS THAT ARE PARTICIPATING IN THE GED EDUCATION PROGRAM WITH TEST STIPENDS. CITIZENS/ STUDENTS ARE NOT CURRENTLY EMPLOYED AND HAS 90% ATTENDANCE WITHIN THE DAILY OFFERED ON SITE GED CLASSES.

Fiscal Years	2017
Capital Expenditures	
Operating Costs	
External Revenues	
Program Income (city)	
In-kind Match (city)	
Net Fiscal Impact	
NO. Additional FTE Positions (cumulative)	

III. Review Comments

A. Finance Department Comments:

B. Purchasing/Intergovernmental Relations/Grants Comments:

C. Department Director Review:

Contract Start Date

Contract End Date

Renewal Start Date

Renewal End Date

Number of 12 month terms this renewal

Dollar Amount

Contractor Company Name

Contractor Contact

Contractor Address

Contractor Phone Number

Contractor Email

Type of Contract

Describe

ATTACHMENTS:

File Name	Description	Upload Date	Type
YEP_GED.pdf	YOUTH EMPOWERMENT GED	4/26/2017	Cover Memo

REVIEWERS:

Department	Reviewer	Action	Date
Purchasing	Jones, Danny	Approved	4/26/2017 - 8:13 PM

Riviera Beach- "Best Waterfront City In Which To Live, Work and Play"

Waste Management Community Benefits
Request for Donations

The City of Riviera Beach, in conjunction with Waste Management Inc. of Florida, has established a Community Benefits Policy. Under the Policy each elected official shall be entitled to designate funds to support approved public projects for public purposes. Public purposes include, but are not limited to, charitable events, not-for-profit organizational events or programs and City functions or projects (which may include contributions to the City's Scholarship Fund or the City's Housing Trust Fund). All requests for donations must be presented to the City Council and approved by a majority of the City Council. The City will attempt to process all requests within fourteen (14) days of City Council approval.

Ineligible uses include the purchase of tables at events, campaign contributions, or payment for salaries or operational expenses. Funds cannot be used to cover an elected official's travel, meals, or for his or her personal benefit or gain or for the personal gain of relatives as defined by City Code, the Palm Beach County Code of Ethics or State Statutes, as applicable. Funds cannot be given to an entity/agency/organization for which the elected official is a director or officer.

Name of Elected Official Sponsoring Donation: Chair Terence Davis

Legal Name of Organization: City of Riviera Beach Youth Empowerment

Program/ Activity Name: Youth Empowerment GED Education Program

Requested Amount: $ 500.00

Briefly describe the Program/Activity below **and** attach (1) letter of request or a more detailed description of the Program/Activity; (2) non-profit paperwork and (3) w-9 IRS form:

Youth Empowerment GED program assist Riviera Beach citizens that are participating in the GED education program with test stipends. Citizens/students are not currently employed, and has 90% attendance within the daily offered on-site GED classes.

Mailing Address: 1550 West 28th Street

City: Riviera Beach State: Florida Zip: 33404

Contact Person(s): Valerie Grimsley

Phone: (561) 840-0135 Fax: (561) 840-0143

Email Address: vgrimsley@rivierabch.com

Name of Authorized Official: Valerie Grimsley

Signature of Authorized Official: Valerie Grimsley Date: April 26th, 2017

******Return the form to the Elected Official or the Legislative Office for processing.**

Waste Management Community Benefits Request for Donations Approval by Elected Official

I, Valerie Grimsley, hereby certify that the donation to City of Riviera Youth Empowerment complies with the City's Community Benefits Policy. I further certify that: (1) I am not an officer, director, partner, proprietor, employee, subcontractor or agent of the organization, its parent organization or subsidiary and I do not have any contractual relationship with or other obligation to the organization, its parent organization or subsidiary; (2) I have no relatives or business associates (as those terms are defined in section 112.312, Florida Statutes) who are officers, directors, partners, proprietors, employees, subcontractors or agents of the organization, its parent organization or subsidiary; (3) The disbursement of the foregoing amount will not inure to my special gain or loss or to the special gain or loss of my relatives or my business associates; and (4) I am not aware of any conflict of interest the disbursement of the foregoing amount to the organization will create for the City of Riviera Beach or myself.

Signature of Elected Official: _____ Date: 4-26-17

Amount Approved by Elected Official: $ 500.00

City Council Action

☐ Approved ☐ Disapproved

Chairperson's Signature: _____ Date: _____

Revised March 2017

Need a High School Diploma?

Earn a GED® in 2017

Special offer for Riviera Beach residents

Why?
Earning a State of Florida High School Diploma opens the door to new opportunities & pathways in your life

When?
May 1 - July 20
Registration: April 24 - April 28, 2017 (9 am-12 pm)
Classes offered Monday – Thursday, from 9 am to 12 pm

Fee?
Special rate for Riviera Beach residents:
$15 per term (May-July)
Non-residents: $30 per term

Call Valerie Grimsley @ 561-840-0135

Youth Empowerment Center
@ Lindsey Davis Center
1550 W. 28th Street, Riviera Beach, FL

CITY OF RIVIERA BEACH PALM BEACH COUNTY, FL

YOUTH EMPOWERMENT PROGRAM

ADULT & COMMUNITY EDUCATION
School District of Palm Beach County

CITY OF RIVIERA BEACH CITY COUNCIL
AGENDA ITEM SUMMARY

Meeting Date: 5/3/2017

Agenda Category: CONSENT

Subject: NATIONAL ALUMNI ASSOCIATION OF BETHUNE COOKMAN COLLEGE, INC. - $600 - COUNCILMAN TERENCE D. DAVIS - TO SUPPORT THE UNIVERSITY IN ITS FUND RAISING ACTIVITIES AND STUDENT RECRUITMENT.

Recommendation/Motion:

Originating Dept	LEGISLATIVE - DISTRICT AT-LARGE	**Costs**	$600
User Dept.	SAME	**Funding Source**	
Advertised	No	**Budget Account Number**	COMMUNITY BENEFITS ACCOUNT NO. 130-0101-511-5-8301
Date			
Paper			
Affected Parties	Not Required		

Background/Summary:

SEE ATTACHMENT

Fiscal Years
Capital Expenditures
Operating Costs
External Revenues
Program Income (city)
In-kind Match (city)
Net Fiscal Impact
NO. Additional FTE Positions (cumulative)

III. Review Comments

A. Finance Department Comments:

B. Purchasing/Intergovernmental Relations/Grants Comments:

C. Department Director Review:

Contract Start Date

Contract End Date

Renewal Start Date

Renewal End Date

Number of 12 month terms this renewal

Dollar Amount

Contractor Company Name

Contractor Contact

Contractor Address

Contractor Phone Number

Contractor Email

Type of Contract

Describe

ATTACHMENTS:

File Name	Description	Upload Date	Type
NATIONAL_ALUMNI_ASSOC._OF_BETHUNE-COOKMAN_COLLEGE__INC._5032017.pdf	NATIONAL ALUMNI ASSOCIATION OF BETHUNE COOKMAN COLLEGE, INC. 05032017	5/2/2017	Cover Memo

REVIEWERS:

Department	Reviewer	Action	Date
District 5	Mitchell, Dorothy	Approved	5/2/2017 - 3:39 PM

Riviera Beach- "Best Waterfront City In Which To Live, Work and Play"

Waste Management Community Benefits
Request for Donations

The City of Riviera Beach, in conjunction with Waste Management Inc. of Florida, has established a Community Benefits Policy, as amended in November 2011. Under the Policy each elected official shall be entitled to designate up to $15,000 per year ($7,500 on October 1st and $7,500 on April 1st) for public purposes. Public purposes include, but are not limited to, charitable events, not-for-profit organizational events or programs and City functions or projects (which may include contributions to the City's Scholarship Fund or the City's Housing Trust Fund). All requests for donations must be presented to the City Council and approved by a majority of the City Council. The City will attempt to process all requests within fourteen (14) days of City Council approval.

Ineligible uses include the purchase of tables at events, campaign contributions, or payment for salaries or operational expenses. Funds cannot be used to cover an elected official's travel, meals, or for his or her personal benefit or gain or for the personal gain of relatives as defined by City Code, the Palm Beach County Code of Ethics, or state statutes, as applicable. Funds cannot be given to an entity/agency/organization for which the elected official is a director or officer.

Name of Elected Official Sponsoring Donation: Terence D. Davis

Legal Name of Organization: National Alumni Association of Bethune Cookman College Inc.

Program/ Activity Name: Bethune Cookman College Inc. Requested Amount: $ 600.00

Briefly describe the Program/Activity below **and** attach (1) a letter of request or a more detailed description of the Program/Activity; (2) non-profit status paperwork and (3) w-9 IRS form:

The mission of the Bethune-Cookman University National Alumni Association is to support the university in the attainment of its mission primarily through fund raising activities and student recruitment Bethune-Cookman University Alumni Association (NAA) is a non-profit organization which provides financial support to the University through networking and

Mailing Address: P.O. Box 11646

City: Daytona Beach State: Florida Zip: 32120-1646

Contact Person(s): Mrs. Sylvia Gibson

Phone: 561-596-6042 Fax:

Email Address: Sylvia Gibson pbacpres@gmail.com

Name of Authorized Official: SYLVIA GIBSON

Signature of Authorized Official: Sylvia L Howard-Gibson Date: 4-25-2017

******Return the form to the Elected Official or the Legislative Office for processing.**

Waste Management Community Benefits Request for Donations Approval by Elected Official

I, Terence D. Davis, hereby certify that the donation to Bethune Cookman University complies with the City's Community Benefits Policy. I further certify that: (1) I am not an officer, director, partner, proprietor, employee, subcontractor or agent of the organization, its parent organization or subsidiary and I do not have any contractual relationship with or other obligation with to the organization its parent organization or subsidiary; (2) I have no relatives or business associates (as those terms are defined in section 112.312, Florida Statutes) who are officers, directors, partners, proprietors, employees, subcontractors or agents of the organization, its parent organization or subsidiary; (3) The disbursement of the foregoing amount will not inure to my special gain or loss or to the special gain or loss of my relatives or my business associates; and (4) I am not aware of any conflict of interest the disbursement of the foregoing amount to the organization will create for the City of Riviera Beach or myself.

Signature of Elected Official: _____ Date: 4-25-2017

Amount Approved by Elected Official: $600.00

City Council Action

☐ Approved ☐ Disapproved

Chairperson's Signature: _____ Date: _____

Revised November 2011

11/19/10

DR-14
R. 04/05

Consumer's Certificate of Exemption

Issued Pursuant to Chapter 212, Florida Statutes

Certificate Number	Effective Date	Expiration Date	Exemption Category
85-8013152748C-0	08/31/2009	08/31/2014	501(C)3 ORGANIZATION

This certifies that

NATIONAL ALUMNI ASSOCIATION OF BETHUNE
COOKMAN COLLEGE INC
640 DR MARY MCLEOD BETHUNE BLVD
DAYTONA BEACH FL 32114-3012

is exempt from the payment of Florida sales and use tax on real property rented, transient rental property rented, tangible personal property purchased or rented, or services purchased.

DR-14
R. 04/05

Important Information for Exempt Organizations

1. You must provide all vendors and suppliers with an exemption certificate before making tax-exempt purchases. See Rule 12A-1.038, Florida Administrative Code (FAC).

2. Your *Consumer's Certificate of Exemption* is to be used solely by your organization for your organization's customary nonprofit activities.

3. Purchases made by an individual on behalf of the organization are taxable, even if the individual will be reimbursed by the organization.

4. This exemption applies only to purchases your organization makes. The sale or lease to others by your organization of tangible personal property, sleeping accommodations or other real property is taxable. Your organization must register, and collect and remit sales and use tax on such taxable transactions. Note: Churches are exempt from this requirement except when they are the lessor of real property (Rule 12A-1.070, FAC).

5. It is a criminal offense to fraudulently present this certificate to evade the payment of sales tax. Under no circumstances should this certificate be used for the personal benefit of any individual. Violators will be liable for payment of the sales tax plus a penalty of 200% of the tax, and may be subject to conviction of a third degree felony. Any violation will necessitate the revocation of this certificate.

6. If you have questions regarding your exemption certificate, please contact the Exemption Unit of Central Registration at 850-487-4130. The mailing address is PO BOX 6480, Tallahassee, FL 32314-6480.

Form **W-9**
(Rev. December 2014)
Department of the Treasury
Internal Revenue Service

Request for Taxpayer Identification Number and Certification

Give Form to the requester. Do not send to the IRS.

Print or type
See Specific Instructions on page 2.

1 Name (as shown on your income tax return). Name is required on this line; do not leave this line blank.
National Alumni Association of Bethune Cookman University, Inc.

2 Business name/disregarded entity name, if different from above

3 Check appropriate box for federal tax classification; check only **one** of the following seven boxes:
☐ Individual/sole proprietor or single-member LLC ☑ C Corporation ☐ S Corporation ☐ Partnership ☐ Trust/estate
☐ Limited liability company. Enter the tax classification (C=C corporation, S=S corporation, P=partnership) ▶
Note. For a single-member LLC that is disregarded, do not check LLC; check the appropriate box in the line above for the tax classification of the single-member owner.
☐ Other (see instructions) ▶

4 Exemptions (codes apply only to certain entities, not individuals; see instructions on page 3):
Exempt payee code (if any)
Exemption from FATCA reporting code (if any)
(Applies to accounts maintained outside the U.S.)

5 Address (number, street, and apt. or suite no.)
PO Box 11646

Requester's name and address (optional)
City of Riveria Beach
600 West Blue Heron Blvd.
Riveria Beach, FL 33404

6 City, state, and ZIP code
Daytona Beach, FL 32120-1646

7 List account number(s) here (optional)

Part I Taxpayer Identification Number (TIN)

Enter your TIN in the appropriate box. The TIN provided must match the name given on line 1 to avoid backup withholding. For individuals, this is generally your social security number (SSN). However, for a resident alien, sole proprietor, or disregarded entity, see the Part I instructions on page 3. For other entities, it is your employer identification number (EIN). If you do not have a number, see *How to get a TIN* on page 3.

Note. If the account is in more than one name, see the instructions for line 1 and the chart on page 4 for guidelines on whose number to enter.

Social security number
☐☐☐ - ☐☐ - ☐☐☐☐

or

Employer identification number
5 9 - 2 3 4 4 4 9 0

Part II Certification

Under penalties of perjury, I certify that:

1. The number shown on this form is my correct taxpayer identification number (or I am waiting for a number to be issued to me); and
2. I am not subject to backup withholding because: (a) I am exempt from backup withholding, or (b) I have not been notified by the Internal Revenue Service (IRS) that I am subject to backup withholding as a result of a failure to report all interest or dividends, or (c) the IRS has notified me that I am no longer subject to backup withholding; and
3. I am a U.S. citizen or other U.S. person (defined below); and
4. The FATCA code(s) entered on this form (if any) indicating that I am exempt from FATCA reporting is correct.

Certification instructions. You must cross out item 2 above if you have been notified by the IRS that you are currently subject to backup withholding because you have failed to report all interest and dividends on your tax return. For real estate transactions, item 2 does not apply. For mortgage interest paid, acquisition or abandonment of secured property, cancellation of debt, contributions to an individual retirement arrangement (IRA), and generally, payments other than interest and dividends, you are not required to sign the certification, but you must provide your correct TIN. See the instructions on page 3.

Sign Here | **Signature of U.S. person ▶** | **Date ▶** 11/7/2016

General Instructions

Section references are to the Internal Revenue Code unless otherwise noted.

Future developments. Information about developments affecting Form W-9 (such as legislation enacted after we release it) is at *www.irs.gov/fw9*.

Purpose of Form

An individual or entity (Form W-9 requester) who is required to file an information return with the IRS must obtain your correct taxpayer identification number (TIN) which may be your social security number (SSN), individual taxpayer identification number (ITIN), adoption taxpayer identification number (ATIN), or employer identification number (EIN), to report on an information return the amount paid to you, or other amount reportable on an information return. Examples of information returns include, but are not limited to, the following:

- Form 1099-INT (interest earned or paid)
- Form 1099-DIV (dividends, including those from stocks or mutual funds)
- Form 1099-MISC (various types of income, prizes, awards, or gross proceeds)
- Form 1099-B (stock or mutual fund sales and certain other transactions by brokers)
- Form 1099-S (proceeds from real estate transactions)
- Form 1099-K (merchant card and third party network transactions)
- Form 1098 (home mortgage interest), 1098-E (student loan interest), 1098-T (tuition)
- Form 1099-C (canceled debt)
- Form 1099-A (acquisition or abandonment of secured property)

Use Form W-9 only if you are a U.S. person (including a resident alien), to provide your correct TIN.

If you do not return Form W-9 to the requester with a TIN, you might be subject to backup withholding. See *What is backup withholding?* on page 2.

By signing the filled-out form, you:

1. Certify that the TIN you are giving is correct (or you are waiting for a number to be issued),

2. Certify that you are not subject to backup withholding, or

3. Claim exemption from backup withholding if you are a U.S. exempt payee. If applicable, you are also certifying that as a U.S. person, your allocable share of any partnership income from a U.S. trade or business is not subject to the withholding tax on foreign partners' share of effectively connected income, and

4. Certify that FATCA code(s) entered on this form (if any) indicating that you are exempt from the FATCA reporting, is correct. See *What is FATCA reporting?* on page 2 for further information.

11/12/18

DR-14
R. 04/05

Consumer's Certificate of Exemption

Issued Pursuant to Chapter 212, Florida Statutes

Certificate Number	Effective Date	Expiration Date	Exemption Category
85-8013152748C-0	08/31/2009	08/31/2014	501(C)(3) ORGANIZATION

This certifies that

NATIONAL ALUMNI ASSOCIATION OF BETHUNE
COOKMAN COLLEGE INC
640 DR MARY MCLEOD BETHUNE BLVD
DAYTONA BEACH FL 32114-3012

is exempt from the payment of Florida sales and use tax on real property rented, transient rental property rented, tangible personal property purchased or rented, or services purchased.

DR-14
R. 04/05

Important Information for Exempt Organizations

1. You must provide all vendors and suppliers with an exemption certificate before making tax-exempt purchases. See Rule 12A-1.038, Florida Administrative Code (FAC).

2. Your *Consumer's Certificate of Exemption* is to be used solely by your organization for your organization's customary nonprofit activities.

3. Purchases made by an individual on behalf of the organization are taxable, even if the individual will be reimbursed by the organization.

4. This exemption applies only to purchases your organization makes. The sale or lease to others by your organization of tangible personal property, sleeping accommodations or other real property is taxable. Your organization must register, and collect and remit sales and use tax on such taxable transactions. Note: Churches are exempt from this requirement except when they are the lessor of real property (Rule 12A-1.070, FAC).

5. It is a criminal offense to fraudulently present this certificate to evade the payment of sales tax. Under no circumstances should this certificate be used for the personal benefit of any individual. Violators will be liable for payment of the sales tax plus a penalty of 200% of the tax, and may be subject to conviction of a third degree felony. Any violation will necessitate the revocation of this certificate.

6. If you have questions regarding your exemption certificate, please contact the Exemption Unit of Central Registration at 850-487-4130. The mailing address is PO BOX 6480, Tallahassee, FL 32314-6480.

CITY OF RIVIERA BEACH CITY COUNCIL
AGENDA ITEM SUMMARY

Meeting Date: 5/3/2017

Agenda Category: CONSENT

Subject: WASTE MANAGEMENT COMMUNITY BENEFITS DONATION OF $500 TO FATHERS FOREVER, INC. FOR THE WELCOMING RECEPTION IN HONOR OF CITY MANAGER JONATHAN E. EVANS.

Recommendation/Motion: RECOMMEND APPROVAL OF $500 DONATION TO FATHERS FOREVER, INC.

Originating Dept	LEGISLATIVE - DISTRICT 1	**Costs**	$500
User Dept.	LEGISLATIVE - DISTRICT 1	**Funding Source**	
Advertised	No	**Budget Account Number**	COMMUNITY BENEFITS ACCOUNT NO. 130-0101-511-1-8301
Date			
Paper			
Affected Parties	Not Required		

Background/Summary:

ON MAY 15, 2017, 5:30PM A WELCOMING RECEPTION WILL BE HELD IN HONOR OF JONATHAN E. EVANS, THE NEW CITY MANAGER AT THE RIVIERA BEACH MARINA EVENT CENTER. COUNCILWOMAN LYNNE HUBBARD IS DONATING $500 FROM DISTRICT 1 WASTE MANAGEMENT COMMUNITY BENEFITS.

Fiscal Years

Capital Expenditures

Operating Costs

External Revenues

Program Income (city)

In-kind Match (city)

Net Fiscal Impact

NO. Additional FTE Positions (cumulative)

III. Review Comments

A. Finance Department Comments:

B. Purchasing/Intergovernmental Relations/Grants Comments:

C. Department Director Review:

Contract Start Date

Contract End Date

Renewal Start Date

Renewal End Date

Number of 12 month terms this renewal

Dollar Amount

Contractor Company Name

Contractor Contact

Contractor Address

Contractor Phone Number

Contractor Email

Type of Contract

Describe

ATTACHMENTS:

File Name	Description	Upload Date	Type
WM_COMM._BENEFITS_-_FATHERS_FOREVER__INC._05032017.pdf	WM COMM. BENEFITS - FATHERS FOREVER, INC. 05032017	5/2/2017	Cover Memo

REVIEWERS:

Department	Reviewer	Action	Date
District 1	Mitchell, Dorothy	Approved	5/2/2017 - 4:59 PM

Waste Management Community Benefits
Request for Donations

The City of Riviera Beach, in conjunction with Waste Management Inc. of Florida, has established a Community Benefits Policy. Under the Policy each elected official shall be entitled to designate funds to support approved public projects for public purposes. Public purposes include, but are not limited to, charitable events, not-for-profit organizational events or programs and City functions or projects (which may include contributions to the City's Scholarship Fund or the City's Housing Trust Fund). All requests for donations must be presented to the City Council and approved by a majority of the City Council. The City will attempt to process all requests within fourteen (14) days of City Council approval.

Ineligible uses include the purchase of tables at events, campaign contributions, or payment for salaries or operational expenses. Funds cannot be used to cover an elected official's travel, meals, or for his or her personal benefit or gain or for the personal gain of relatives as defined by City Code, the Palm Beach County Code of Ethics or state statutes, as applicable. Funds cannot be given to an entity/agency/organization for which the elected official is a director or officer.

Name of Elected Official Sponsoring Donation: Lynne L. Hubbard

Legal Name of Organization: Fathers Forever

Program/ Activity Name: New City Manager Welcome

Requested Amount: $ 500.00

Briefly describe the Program/Activity below **and** attach (1) letter of request or a more detailed description of the Program/Activity; (2) non-profit paperwork and (3) w-9 IRS form:

Welcome reception for the New City Manager Mr. Evans

Mailing Address: 1113 W. 26th Ct.

City: Riviera Bch State: FL Zip: 33404

Contact Person(s): Amon Yisrael

Phone: (561) 719-0527 Fax: ( )

Email Address: Amon144000@yahoo.com

Name of Authorized Official: J.H.B.

Signature of Authorized Official: Jason Banner Date: 4/25/17

******Return the form to the Elected Official or the Legislative Office for processing.**

Rev. 2/2017

Waste Management Community Benefits Request for Donations Approval by Elected Official

I, COUNCILWOMAN LYNNE L. HUBBARD, hereby certify that the donation to FATHERS FOREVER, INC. complies with the City's Community Benefits Policy. I further certify that: (1) I am not an officer, director, partner, proprietor, employee, subcontractor or agent of the organization, its parent organization or subsidiary and I do not have any contractual relationship with or other obligation with to the organization its parent organization or subsidiary; (2) I have no relatives or business associates (as those terms are defined in section 112.312, Florida Statutes) who are officers, directors, partners, proprietors, employees, subcontractors or agents of the organization, its parent organization or subsidiary; (3) The disbursement of the foregoing amount will not inure to my special gain or loss or to the special gain or loss of my relatives or my business associates; and (4) I am not aware of any conflict of interest the disbursement of the foregoing amount to the organization will create for the City of Riviera Beach or myself.

Signature of Elected Official: Lynne Hubbard Date: 5/2/17

Amount Approved by Elected Official: $ 500.00

City Council Action

☐ Approved ☐ Disapproved

Chairperson's Signature: _____ Date: _____

Revised November 2011

Form **W-9**
(Rev. November 2005)
Department of the Treasury
Internal Revenue Service

Request for Taxpayer Identification Number and Certification

Give form to the requester. Do not send to the IRS.

Print or type
See Specific Instructions on page 2.

Name (as shown on your income tax return)
Jason Bonner

Business name, if different from above
Fathers Forever, Inc.

Check appropriate box: ☐ Individual/Sole proprietor ☑ Corporation ☐ Partnership ☐ Other ▶ ☐ Exempt from backup withholding

Address (number, street, and apt. or suite no.)
2600 Australian Ave #100K

Requester's name and address (optional)

City, state, and ZIP code
West Palm Beach, FL 33407

List account number(s) here (optional)

Part I Taxpayer Identification Number (TIN)

Enter your TIN in the appropriate box. The TIN provided must match the name given on Line 1 to avoid backup withholding. For individuals, this is your social security number (SSN). However, for a resident alien, sole proprietor, or disregarded entity, see the Part I instructions on page 3. For other entities, it is your employer identification number (EIN). If you do not have a number, see *How to get a TIN* on page 3.

Note. If the account is in more than one name, see the chart on page 4 for guidelines on whose number to enter.

Social security number
| | | | | | | | | |

or

Employer identification number
8 1 4 7 0 6 2 9 0

Part II Certification

Under penalties of perjury, I certify that:

1. The number shown on this form is my correct taxpayer identification number (or I am waiting for a number to be issued to me), and
2. I am not subject to backup withholding because: (a) I am exempt from backup withholding, or (b) I have not been notified by the Internal Revenue Service (IRS) that I am subject to backup withholding as a result of a failure to report all interest or dividends, or (c) the IRS has notified me that I am no longer subject to backup withholding, and
3. I am a U.S. person (including a U.S. resident alien).

Certification instructions. You must cross out item 2 above if you have been notified by the IRS that you are currently subject to backup withholding because you have failed to report all interest and dividends on your tax return. For real estate transactions, item 2 does not apply. For mortgage interest paid, acquisition or abandonment of secured property, cancellation of debt, contributions to an individual retirement arrangement (IRA), and generally, payments other than interest and dividends, you are not required to sign the Certification, but you must provide your correct TIN. (See the instructions on page 4.)

Sign Here Signature of U.S. person ▶ JB Date ▶ 4/25/17

Purpose of Form

A person who is required to file an information return with the IRS, must obtain your correct taxpayer identification number (TIN) to report, for example, income paid to you, real estate transactions, mortgage interest you paid, acquisition or abandonment of secured property, cancellation of debt, or contributions you made to an IRA.

U.S. person. Use Form W-9 only if you are a U.S. person (including a resident alien), to provide your correct TIN to the person requesting it (the requester) and, when applicable, to:

1. Certify that the TIN you are giving is correct (or you are waiting for a number to be issued),
2. Certify that you are not subject to backup withholding, or
3. Claim exemption from backup withholding if you are a U.S. exempt payee.

In 3 above, if applicable, you are also certifying that as a U.S. person, your allocable share of any partnership income from a U.S. trade or business is not subject to the withholding tax on foreign partners' share of effectively connected income.

Note. If a requester gives you a form other than Form W-9 to request your TIN, you must use the requester's form if it is substantially similar to this Form W-9.

For federal tax purposes, you are considered a person if you are:

- An individual who is a citizen or resident of the United States,
- A partnership, corporation, company, or association created or organized in the United States or under the laws of the United States, or
- Any estate (other than a foreign estate) or trust. See Regulations sections 301.7701-6(a) and 7(a) for additional information.

Special rules for partnerships. Partnerships that conduct a trade or business in the United States are generally required to pay a withholding tax on any foreign partners' share of income from such business. Further, in certain cases where a Form W-9 has not been received, a partnership is required to presume that a partner is a foreign person, and pay the withholding tax. Therefore, if you are a U.S. person that is a partner in a partnership conducting a trade or business in the United States, provide Form W-9 to the partnership to establish your U.S. status and avoid withholding on your share of partnership income.

The person who gives Form W-9 to the partnership for purposes of establishing its U.S. status and avoiding withholding on its allocable share of net income from the partnership conducting a trade or business in the United States is in the following cases:

- The U.S. owner of a disregarded entity and not the entity,

OFFICE
1133 West 26 Court
Riviera Beach, FL 33404

PHONE
(561) 719-9527

EMAIL
info@fathers4ever.org

WEB
www.fathers4ever.org

"We are a group of volunteer men who have committed to extend the spirit of fatherhood in our community by impacting, promoting and protecting experiences for our children and our elders.

We won't be satisfied with simply being Good, we'll dare to be Great!"

Dear Friend,

As a valued member of our community, Fathers Forever, Inc., cordially invites you to its official "One City, One Vision" welcoming reception in honor of Jonathan Evans, Riviera Beach's new city manager. This affair will be held on May 15, 2017, 5:30 p.m., at the Riviera Beach Marina Event Center, located at 190 East 13th Street, Riviera Beach, FL. We anticipate some three hundred guests to be in attendance. While embracing Mr. Evans during this affair, reception participants will have an opportunity to network, exchange ideas and socialize with fellow community residents as Mr. Evans outlines his vision for Riviera Beach.

To insure the success of this event, Fathers Forever would like for you to be a sponsor and commit to supporting this event by making a financial donation. As a participating sponsor, you will receive soaring recognition for your company packaged in our Reception Sponsorship Levels. We have enclosed a sponsorship package for you to complete and return as quickly as possible.

As a 501 c(3) organization, Fathers Forever's mission is to inspire and collaborate with community residents, businesses, and leaders to demonstrate a spirited effort to galvanize, as a city, under the banner of "One City, One Vision." Our vision will stretch the imaginations of our community's children and adults to transcend previous challenges.

To achieve our mission and provide community event services, Fathers Forever relies on the liberality of our friends in the business community for financial support. The capital subsidy of community-based efforts allows us to serve our city with energized confidence.

Thank you in advance for your consideration,
cooperation and contribution.

Respectfully

Jason Bonner
President

"One City, One Vision"

Welcome Reception *Sponsorship Levels*

Sponsor Name: _____

Sponsor Address: 600 W. Blue Heron Blvd

Contact Phone: (561) 598 - 0514

Website: _____

Contact Person: 561 - 598 - 0514 / Lynne Hubbard

I WOULD LIKE TO SIGN UP FOR THE FOLLOWING "ONE CITY, ONE VISION" WELCOME RECEPTION SPONSORSHIP:

Sponsorship Levels		
Diamond	**Gold**	**Friends**
$1.000 -$2,500	**$500**	**$100**
Acknowledgement at Welcome Reception	Acknowledgement at Welcome Reception	Acknowledgement at Welcome Reception
Acknowledgement at City Council Meeting	Acknowledgement at City Council Meeting	
Photo Op with Honoree	Photo Op	
Priority Seating	Priority Seating	
Banner with Company Logo		
Logo on all marketing materials		

Please email your logo along with this form to: info@fathers4ever.org.

Make checks payable to Fathers Forever and mail to: **1133 West 26th Court, Riviera Beach, Florida 33404.**

Upon receipt of sponsorship payment, you will receive a receipt with the Father Forever Tax ID Number for your records. Fathers Forever is a non-profit 501©3 organization and we appreciate your support!

Feel free to contact Fathers Forever, Inc. if you have any questions. *"One City, One Vision" Welcome Reception Planning Committee at 561-281-0339 or 561-719-9527.*

THANK YOU FOR YOUR SUPPORT!

CITY OF RIVIERA BEACH CITY COUNCIL
AGENDA ITEM SUMMARY

Meeting Date: 5/3/2017

Agenda Category: PRESENTATIONS

Subject: PROCLAIMING MAY 21, 2017 THROUGH MAY 27, 2017 AS NATIONAL PUBLIC WORKS WEEK

Recommendation/Motion: That the Mayor proclaim May 21, 2017 through May 27, 2017 National Public Works Week.

Originating Dept	Public Works	**Costs**	
User Dept.	Public Works	**Funding Source**	
Advertised	No	**Budget Account Number**	
Date			
Paper			
Affected Parties	Not Required		

Background/Summary:

Each year, the nation through the efforts of, and in conjunction with the American Public Works Association (APWA), recognizes the work of Public Works employees and organizations during National Public Works Week. This year's celebration will be from May 21, 2017 through May 27, 2017. The City currently has 53 employees entrusted with the responsibility to maintain the City's roadways, drainage systems, City buildings, and vehicle and equipment maintenance. Public Works also carries out numerous ongoing special assignments including special events setup which includes standby, participation and break-down. The individuals in the Public Works Department are deserving of recognition as they work tirelessly to keep our City's infrastructure maintained.

National Public Works Week promotes awareness that Public Works is vital to the growth and quality of life in our City. The health, safety and comfort of our citizens greatly depends upon Public Works systems such as our streets, storm water utility, public buildings, solid waste collection and disposal, and vehicle and equipment maintenance. The efficiency of our qualified and dedicated Public Works personnel is materially influenced by our citizens' attitude and understanding of the importance of the work they perform. For additional insight into what services Public works provides, everyone is invited to stop by the Public Works display booth for National Public Works Week that will be set up in the lobby of City Hall, May 21, 2017 through May 27, 2017.

Fiscal Years

Capital Expenditures

Operating Costs
External Revenues
Program Income (city)
In-kind Match (city)
Net Fiscal Impact
NO. Additional FTE Positions (cumulative)

III. Review Comments

A. Finance Department Comments:

B. Purchasing/Intergovernmental Relations/Grants Comments:

C. Department Director Review:

Contract Start Date

Contract End Date

Renewal Start Date

Renewal End Date

Number of 12 month terms this renewal

Dollar Amount

Contractor Company Name

Contractor Contact

Contractor Address

Contractor Phone Number

Contractor Email

Type of Contract

Describe

ATTACHMENTS:

File Name	Description	Upload Date	Type
PROCLAMATION_2017.doc	Proclaimation	4/21/2017	Presentation

REVIEWERS:

Department	Reviewer	Action	Date
Public Works	Mitchell, Dorothy	Approved	4/26/2017 - 7:20 PM

PROCLAMATION

PROCLAMATION OF THE CITY OF RIVIERA BEACH,
PALM BEACH COUNTY, FLORIDA

WHEREAS, public works services provided in our community are an integral part of our citizens' everyday lives; and

WHEREAS, maintaining sound public works infrastructure, facilities and services are of vital importance to the health, safety and well-being of the citizens of Riviera Beach; and

WHEREAS, the support of an understanding and informed citizenry is vital to the efficient operation of public works functions and services such as fleet services, streets and engineering, public buildings, solid waste collection, and canal maintenance; and

WHEREAS, the quality and effectiveness of these programs and facilities, as well as their planning, design, and construction, are vitally dependent upon the efforts and skill of our Public Works employees; and

WHEREAS, the efficiency of the qualified and dedicated personnel who comprise the Public Works Department is materially influenced by the people's attitude and understanding of the importance of the work they perform.

WHEREAS, this year's theme ***"Public Works Connects Us"*** is a testament to the integral role that public works plays in integrating citizens and services to improve the everyday quality of life for all residents.

NOW, THEREFORE, I, Thomas A. Masters, Mayor of the City of Riviera Beach, Florida, by virtue of authority invested in me, do hereby proclaim the week of May 21 – 27, 2017 as

NATIONAL PUBLIC WORKS WEEK

in the City of Riviera Beach, and call upon all citizens and civic organizations to acquaint themselves with the issues involved in providing public works services and to acknowledge the contributions the Public Works employees make every day in their effort to preserve the health, safety, comfort, and quality of life of all citizens in the City of Riviera Beach.

ATTEST

IN WITNESS WHEREOF, I have Hereunto Set my hand and caused the Official seal of the City of Riviera Beach to be affixed on this 3rd day of May Two Thousand Seventeen.

_____
Claudene L. Anthony, CMC, City Clerk

_____
Thomas A. Masters, Mayor

CITY OF RIVIERA BEACH CITY COUNCIL
AGENDA ITEM SUMMARY

Meeting Date: 5/3/2017

Agenda Category: PRESENTATIONS

Subject: LUPUS AWARENESS MONTH

Recommendation/Motion:

Originating Dept	LEGISLATIVE - DISTRICT 2	**Costs**	
User Dept.		**Funding Source**	
Advertised	No	**Budget Account Number**	
Date			
Paper			
Affected Parties	Not Required		

Background/Summary:

Fiscal Years
Capital Expenditures
Operating Costs
External Revenues
Program Income (city)
In-kind Match (city)
Net Fiscal Impact
NO. Additional FTE Positions (cumulative)

III. Review Comments

A. Finance Department Comments:

B. Purchasing/Intergovernmental Relations/Grants Comments:

C. Department Director Review:

Contract Start Date

Contract End Date

Renewal Start Date

Renewal End Date

Number of 12 month terms this renewal

Dollar Amount

Contractor Company Name

Contractor Contact

Contractor Address

Contractor Phone Number

Contractor Email

Type of Contract

Describe

ATTACHMENTS:

File Name	Description	Upload Date	Type
PROCLAMATION_-_LUPUS_AWARENESS_MONTH._05032017.pdf	PROCLAMATION - LUPUS AWARENESS MONTH. 05032017	5/2/2017	Cover Memo

REVIEWERS:

Department	Reviewer	Action	Date
City Manager	Jones, Danny	Approved	4/26/2017 - 8:19 PM

PROCLAMATION

FROM THE OFFICE OF THE MAYOR
CITY OF RIVIERA BEACH
PALM BEACH COUNTY, FLORIDA

WHEREAS, the first LUPUS awareness observance occurred in 1977, followed by a month-long observance in 1986, and ultimately in 2009 ended with MAY being designated as Lupus Awareness Month by the Lupus Awareness Foundation of America; and

WHEREAS, each year since 2004, May 10th was designated as World Lupus Day as a call to action for governments around the world to increase their financial support for lupus research, awareness and patient services, as well as for community members to show their support in raising awareness for the estimated 5 million people who have lupus; and

WHEREAS, Lupus is a chronic autoimmune disease in which the immune system inexplicably and randomly attacks the body's own tissue and vital organs, including the kidneys, brain, heart, lungs, blood, skin and joints. It is a leading cause of premature cardiovascular disease, kidney disease and stroke among young women; and

WHEREAS, each year, thousands of people are newly diagnosed with lupus, most of whom are young people in the prime of their lives and 90 percent are women. While lupus strikes mostly women of childbearing age, no one is safe from it. Lupus disproportionately affects women of color and is more prevalent in African Americans, Hispanics, Native Americans and Asians. More than half of all people with lupus take four or more years in three or more visits to as many doctors before obtaining a correct diagnosis; and

WHEREAS, there are periods of time when your lupus systems flare up; and periods of time when your systems are under control and in remission. However, flares and remissions can occur abruptly, unexpectedly and without clear cause. There is no way to predict when a flare will happen, how bad it will be or how long it will last; and

WHEREAS, LUPUS is one of the most difficult diseases to diagnose because symptoms come and go, mimic those of other diseases, and there is no definite test that can identify the illness. Yet early diagnosis and treatment usually lessen the progression and severity of the disease and are vital to preserving health and preventing further complications, organ damage and death; and

WHEREAS, I urge each of our citizens to observe this day by educating themselves on the symptoms and impact of lupus, and to join with the Florida Chapter of the Lupus Foundation of America in supporting programs of research, education and community service.

NOW, THEREFORE, BE IT RESOLVED that I, Bishop Thomas A. Masters, Mayor of the City of Riviera Beach, Florida, by the power vested in me by the residents of this great City do hereby proclaim MAY 2017 as LUPUS AWARENESS MONTH in the City of Riviera Beach, Florida and urge fellow citizens to join me in observing WORLD LUPUS DAY on MAY 10TH and 'PUT ON PURPLE DAY' on MAY 19th. Let us all educate ourselves and participate in these observances that so severely impact our community.

IN WITNESS WHEREOF, I have hereunto set my hand and caused the official seal of the City of Riviera Beach, Florida to be affixed on this 3rd day of MAY, 2017.

Thomas A. Masters, Mayor

ATTEST:

Claudene L. Anthony, CMC City Clerk

CITY OF RIVIERA BEACH CITY COUNCIL
AGENDA ITEM SUMMARY

Meeting Date: 5/3/2017

Agenda Category: PRESENTATIONS

Subject: PRESENTATION OF PROJECT CONCERNING THE LEASE AGREEMENT BETWEEN THE CITY OF RIVIERA BEACH AND THE RIVIERA BEACH MARITIME ACADEMY CORPORATION.

Recommendation/Motion:

Originating Dept	Community Development	**Costs**	N/A
User Dept.	Community Development	**Funding Source**	
Advertised	No	**Budget Account Number**	
Date			
Paper			
Affected Parties	Not Required		

Background/Summary:

In follow-up to the City Council meeting of April 5, 2017, consistent mutual negotiations between both parties, namely Viking (Riviera Beach Maritime Academy Corporation) and the City (City Manager's Office) have taken place. As a result of the cooperative discussions, representatives of the City Manager's Office and Viking are positioned to make formal presentations to the City Council to share the findings realized as a part of this process.

In an effort to perpetuate progress, at the conclusion of this Presentation, the City Manager's Office is requesting that the City Council formally provide staff with instructions on how to move forward with this Project. Accordingly, in compliance with City Council's directive, staff will draft the necessary and appropriate documents to effectuate the close-out of this transaction.

City staff further informs that for convenient reference, documents relative to the history of this matter are attached to this item.

Fiscal Years

Capital Expenditures

Operating Costs

External Revenues

Program Income (city)

In-kind Match (city)

Net Fiscal Impact

NO. Additional FTE Positions (cumulative)

III. Review Comments

A. Finance Department Comments:

B. Purchasing/Intergovernmental Relations/Grants Comments:

C. Department Director Review:

Contract Start Date

Contract End Date

Renewal Start Date

Renewal End Date

Number of 12 month terms this renewal

Dollar Amount

Contractor Company Name

Contractor Contact

Contractor Address

Contractor Phone Number

Contractor Email

Type of Contract

Describe

ATTACHMENTS:

File Name	Description	Upload Date	Type
MARITIME_ACADEMY_APRIL_5_2017_SUMMARY.04192017.pdf	MARITIME ACADEMY APRIL 5 2017 SUMMARY.04192017	4/12/2017	Cover Memo
Resolution_Maritime_Academy_4th_lease_amendment.docx	Resolution - Maritime Academy 4th Lease Amendment	8/24/2016	Resolution
Lease_with_Maritime_Academy_after_RFP_for_50_years.7.19.16.docx	Maritime Academy 50 Year Lease Agreement	8/24/2016	Agreement
Resolution_47-06_executed.pdf	Resolution No 47-06	8/24/2016	Backup Material
2006_Maritime_Lease_agreement.pdf	2006 Maritime Academy Lease Agreement	8/24/2016	Backup Material
Resolution_143-08_executed.pdf	Resolution No 143-08	8/24/2016	Backup Material
2008_Maritime_Lease_agreement.pdf	2008 Maritime Academy Lease Agreement	8/24/2016	Backup Material
	Resolution No 86-11		Backup

Resolution_86-11_executed.pdf	Resolution No 86-11 (1st Amendment)	8/24/2016	Backup Material
Resolution_101-13_executed.pdf	Resolution No 101-13 (2nd amendment)	8/24/2016	Backup Material
Resolution_112-15_executed.pdf	Resolution No 112-15 (3rd amendment)	8/24/2016	Backup Material
Exhibt_A_Legal_Description_and_Survey.pdf	Exhibit A Legal Description and Survey	8/24/2016	Exhibit
Riviera_Beach_Maritime_Academy_-_Section_5_-_Preliminary_Site_Plan.pdf	Exhibit B Site Plan	8/24/2016	Exhibit

REVIEWERS:

Department	Reviewer	Action	Date
Community Development	Spradley, DeAndre	Approved	8/24/2016 - 1:59 PM
Finance	sherman, randy	Approved	8/25/2016 - 9:41 AM
Attorney	James, Sheila	Rejected	8/30/2016 - 4:49 PM
Community Development	Spradley, DeAndre	Approved	8/31/2016 - 3:36 PM
Finance	sherman, randy	Approved	8/31/2016 - 7:04 PM
Attorney	Lina Busby, Lina	Approved	9/1/2016 - 9:35 AM
City Clerk	Burgess, Jackie	Approved	9/1/2016 - 11:48 AM
City Manager	Jones, Ruth	Approved	9/27/2016 - 10:24 AM

CITY OF RIVIERA BEACH CITY COUNCIL
AGENDA ITEM SUMMARY

Meeting Date: 4/5/2017

Agenda Category: PUBLIC HEARING RESOLUTION

Subject: A RESOLUTION OF THE CITY COUNCIL OF THE CITY OF RIVIERA BEACH, PALM BEACH COUNTY, FLORIDA AUTHORIZING THE MAYOR AND CITY CLERK TO EXECUTE THE FOURTH AMENDMENT TO A LEASE AGREEMENT WITH THE RIVIERA BEACH MARITIME ACADEMY CORPORATION COMMENCING AUGUST 30, 2016 UNTIL AUGUST 30, 2066; AND PROVIDING FOR AN EFFECTIVE DATE.

Recommendation/Motion: Staff is recommending the City Council to consider approving this Resolution

Originating Dept	Community Development	**Costs**	N/A
User Dept.	Community Development	**Funding Source**	
Advertised	No	**Budget Account Number**	
Date			
Paper			
Affected Parties	Notified		

Background/Summary:

In August 2006, the City entered into a two-year lease agreement with Riviera Beach Maritime Academy Corporation for the operation of a charter school on City owned land near the former Riviera Beach Elementary School at 251 West 11th Street (PCN: 56-43-42-33-06-030-0010).

In November 2008, the lease agreement established in 2006 expired and the City established a new one year lease agreement at $500 per month with the Riviera Beach Maritime Academy. This new lease agreement created a lease term from November 5, 2008 to October 5, 2009.

From October 2009 to June 2011, the Riviera Beach Maritime Academy operated on a month to month lease at $500 per month.

On June 9, 2011, the City executed a two-year lease agreement with the Maritime Academy, which extended the lease term from June 15, 2011 to August 30, 2013 (1st amendment) at $500 per month.

On August 7, 2013, the City extended the lease agreement for two additional years at $500 per month (2nd amendment) covering the lease term of August 30, 2013 to August 30, 2015.

On August 19, 2015, the City extended the lease agreement for one additional year at $500 per month (3rd amendment) covering the lease term August 30, 2015 to August 30, 2016.

The Riviera Beach Maritime Academy is requesting that the City Council authorize a new 50 year lease at $1.00 per year extending the term from August 30, 2016 to August 30, 2066 (4th amendment).

Since 2006, Riviera Beach Maritime Academy has continued to successfully operate as a not-for-profit charter school which provides an educational and training program for high school youth who desire to learn about the maritime industry.

This agreement would reduce annual revenue by $5,999 in comparison to the current agreement.

Fiscal Years	2016	2017	2018	2019	2020
Capital Expenditures					
Operating Costs					
External Revenues	$1.00	$1.00	$1.00	$1.00	$1.00
Program Income (city)					
In-kind Match (city)					
Net Fiscal Impact	($5,999)	($5,999)	($5,999)	($5,999)	($5,999)
NO. Additional FTE Positions (cumulative)					

III. Review Comments

A. Finance Department Comments:

B. Purchasing/Intergovernmental Relations/Grants Comments:

C. Department Director Review:

Contract Start Date

Contract End Date

Renewal Start Date

Renewal End Date

Number of 12 month terms this renewal

Dollar Amount

Contractor Company Name

Contractor Contact

Contractor Address

Contractor Phone Number

Contractor Email

Type of Contract

Describe

ATTACHMENTS:

File Name	Description	Upload Date	Type
Resolution_Maritime_Academy_4th_lease_amendment.docx	Resolution - Maritime Academy 4th Lease Amendment	12/27/2016	Resolution
Lease_with_Maritime_Academy_after_RFP_for_50_years.7.19.16.docx	Maritime Academy 50 Year Lease Agreement	12/27/2016	Agreement
Resolution_47-06_executed.pdf	Resolution No 47-06	12/27/2016	Backup Material
2006_Maritime_Lease_agreement.pdf	2006 Maritime Academy Lease Agreement	12/27/2016	Backup Material
Resolution_143-08_executed.pdf	Resolution No 143-08	12/27/2016	Backup Material
2008_Maritime_Lease_agreement.pdf	2008 Maritime Academy Lease Agreement	12/27/2016	Backup Material
Resolution_86-11_executed.pdf	Resolution No 86-11 (1st Amendment)	12/27/2016	Backup Material
Resolution_101-13_executed.pdf	Resolution No 101-13 (2nd amendment)	12/27/2016	Backup Material
Resolution_112-15_executed.pdf	Resolution No 112-15 (3rd amendment)	12/27/2016	Backup Material
Exhibt_A_Legal_Description_and_Survey.pdf	Exhibit A Legal Description and Survey	12/27/2016	Exhibit
Riviera_Beach_Maritime_Academy_-_Section_5_-_Preliminary_Site_Plan.pdf	Exhibit B Site Plan	12/27/2016	Exhibit

REVIEWERS:

Department	Reviewer	Action	Date
Community Development	Spradley, DeAndre	Approved	3/30/2017 - 6:37 PM
Purchasing	Mealy, Dean	Approved	3/31/2017 - 9:00 AM
Finance	sherman, randy	Approved	3/31/2017 - 9:25 AM
Attorney	James, Sheila	Approved	3/31/2017 - 9:31 AM
City Clerk	Burgess, Jackie	Approved	3/31/2017 - 11:26 AM
City Manager	Jones, Danny	Approved	3/31/2017 - 2:01 PM

RESOLUTION NO. _____

A RESOLUTION OF THE CITY COUNCIL OF THE CITY OF RIVIERA BEACH, PALM BEACH COUNTY, FLORIDA AUTHORIZING THE MAYOR AND CITY CLERK TO EXECUTE THE FOURTH AMENDMENT TO A LEASE AGREEMENT WITH THE RIVIERA BEACH MARITIME ACADEMY CORPORATION COMMENCING AUGUST 30, 2016 UNTIL AUGUST 30, 2066; AND PROVIDING FOR AN EFFECTIVE DATE.

WHEREAS, on April 5, 2006, the City Council, by Resolution No. 47-06, entered into a 28 month lease agreement from April 6, 2006 to August 5, 2008 for $500 a month with Riviera Beach Maritime Academy Corporation for the operation of a charter school on City owned land which was the site of the former Riviera Beach Elementary School at 251 West 11th Street (PCN: 56-43-42-33-06-030-0010) as a temporary location pending the acquisition and construction of a permanent school in Riviera Beach; and

WHEREAS, from August 2008 to November 2008, the Riviera Beach Maritime Academy operated on a month to month lease at $500 per month; and

WHEREAS, on November 5, 2008, the City Council, by Resolution No. 143-08, entered into a one year lease agreement (November 5, 2008 to October 5, 2009) (the lease agreement established in April 2006 expired and a new lease was created by the City) at $500 per month with Riviera Beach Maritime Academy Corporation for the continued operation of a charter school on the referenced City owned land; and

WHEREAS, from October 2009 to June 2011, the Riviera Beach Maritime Academy operated on a month to month lease at $500 per month; and

WHEREAS, on June 9, 2011, the City Council, by Resolution No. 86-11, executed a two-year lease amendment at $500 per month with Riviera Beach Maritime Academy Corporation extending the lease from June 15, 2011 until August 30, 2013 (1st Amendment); and

WHEREAS, on August 7, 2013, the City Council, by Resolution No. 101-13, entered into a two-year lease amendment at $500 per month with Riviera Beach Maritime Academy Corporation extending the lease from August 30, 2013 to August 30, 2015 (2nd Amendment); and

WHEREAS, on August 19, 2015, the City Council, by Resolution No. 112-15, entered into a one-year lease amendment at $500 per month with Riviera Beach Maritime Academy Corporation extending the lease from August 30, 2015 to August 30, 2016 (3rd Amendment); and

WHEREAS, the Riviera Beach Maritime Academy Corporation has leased the City owned property at 251 West 11th Street since 2006 and desires to extend the lease term at $1.00 per year for 50 years extending the lease from August 30, 2015 to August 30, 2066 (4th Amendment).

NOW, THEREFORE, BE IT RESOLVED BY THE CITY COUNCIL OF THE CITY OF RIVIERA BEACH, PALM BEACH COUNTY, FLORIDA, AS FOLLOWS:

SECTION 1. The City Council hereby authorizes the Mayor and City Clerk to execute a Fourth Lease Agreement on behalf of the City of Riviera Beach with the Riviera Beach Maritime Academy, Corporation for an additional 50 years commencing August 30, 2016 until August 30, 2066 at $1.00 per year.

SECTION 2. This Resolution shall take effect immediately upon approval.

PASSED and APPROVED this _____day of _____, 2015.

_____
THOMAS A. MASTERS
MAYOR

_____
TERENCE D. DAVIS
CHAIRPERSON

ATTEST:

_____
CLAUDENE L. ANTHONY
CERTIFIED MUNICIPAL CLERK
CITY CLERK

_____
KASHAMBA MILLER-ANDERSON
CHAIR PRO TEM

_____
LYNNE L. HUBBARD
COUNCILPERSON

_____
TONYA DAVIS JOHNSON
COUNCILPERSON

_____
DAWN S. PARDO
COUNCILPERSON

MOTIONED BY: _____

SECONDED BY: _____

L. HUBBARD _____

K. MILLER-ANDERSON _____

T. DAVIS JOHNSON _____

D. PARDO _____

T. DAVIS _____

REVIEWED AS TO LEGAL SUFFICIENCY

ANDREW DEGRAFFENREIDT, CITY ATTORNEY

DATE: _____

LEASE BETWEEN THE CITY OF RIVIERA BEACH
AND THE RIVIERA BEACH MARITIME ACADEMY

THIS LEASE is made this ____ day of _____, 2016 (the "**Effective Date**"), by and between the **CITY OF RIVIERA BEACH, FLORIDA**, a Florida municipal corporation (hereinafter referred to as the **"Lessor"**), and **RIVIERA BEACH MARITIME ACADEMY, CORP.**, a not-for-profit Florida corporation (hereinafter referred to as **"Lessee"**).

WITNESSETH:

WHEREAS, Lessee is a not-for-profit entity providing valuable youth educational services within the City of Riviera Beach, Florida; and

WHEREAS, Lessor and Lessee are currently parties to that certain Lease Agreement Amendment, dated August 30, 2015 (the **"Existing Lease"**), wherein the Lessee is the tenant of certain real property generally located at 251 West 11th Street, Riviera Beach, Florida (Parcel Control Number: 56-43-42-33-06-030-0010), which is more particularly described in **Exhibit "A"** attached hereto (hereinafter referred to as **"Premises"**); and

WHEREAS, Lessee desires to continue leasing the Premises pursuant to the covenants and conditions herein set forth and desires to construct a permanent building of approximately 28,000 square feet, described below as the **"Improvements"** on the Premises as shown on the preliminary site plan attached hereto as **Exhibit "B"**; and

WHEREAS, Lessor received an unsolicitated proposal from the Lessee to construct a new building and other necessary land improvements designed to facilitate better education and training on the maritime industry to students in Palm Beach County; and

WHEREAS, Lessor, pursuant to section 287.05712, Florida Statutes, solicitated proposals from others who may have been interested in entering into a similar public-private partnership with Lessor; and

WHEREAS, only Lessee responded to the solicitation and Lessor's staff recommended that Lessor enter into a lease agreement with Lessee; and

WHEREAS, Lessor and Lessee now desire to enter into a lease which sets forth the covenants, provisions and conditions pursuant to which Lessee shall lease from Lessor said Premises, to be used solely and exclusively for educational purposes or other public purposes as permitted herein; and

WHEREAS, Lessor has determined that it is in the best interest of the public to enter into this Lease with Lessee.

NOW, THEREFORE, this Lease of the Premises hereinafter described is granted by the Lessor and taken and accepted by the Lessee upon the rents, covenants and conditions contained in this Lease, and the Lessor and Lessee do hereby covenant and agree with each other as follows.

ARTICLE I
BASIC LEASE PROVISIONS

1.1. Recitals

The foregoing recitals are true and correct and hereby incorporated into this Lease.

1.02 Leased Premises

In consideration of the rents, covenants and conditions hereinafter reserved and contained on the part of the Lessee to be observed and performed, the Lessor hereby agrees to demise and lease to the Lessee, and Lessee shall rent from Lessor, the Premises described above. The Premises and this Lease shall be subject to the following:

(a) Existing conditions, easements, rights of way, restrictions and limitations, if any, recorded in the official records;
(b) City and/or County Zoning Ordinances now existing or which may hereafter exist;
(c) All matters shown on the survey to be obtained by Lessee at its sole expense; and,
(d) All of the covenants and conditions contained in this Lease and the Existing Lease.

1.03 Parking

Parking for the use of the Premises and for the use of any Improvements, Alterations and any parts thereof to be constructed upon the Premises shall be located on the Premises and constructed and maintained by Lessee at its sole expense.

1.04 Length of Term and Effective Date

The term of this Lease (the "**Term**") shall be for a period of fifty (50) years commencing from the Effective Date. If construction of the Improvements is not commenced by 18 months after the Effective Date or if construction of the Improvements is not completed by December 31, 2018, then at Lessor's option upon thirty (30) days written notice to Lessee, this Lease shall be converted into a lease under the terms of the Existing Lease with a term ending as of the first day of July next following said notice from the Lessor. Notwithstanding the foregoing, if Lessee shall have commenced construction of the Improvements but shall not have completed same by December 31, 2018, Lessee may request one additional six (6) month extension of time to complete construction, which request shall not be unreasonably denied as long as construction is being continuously pursued.

1.05 Upon the Effective Date

Upon the Effective Date of this Lease, Lessee shall assume all responsibility, obligation and liability for the Premises as stated in this Lease and Lessee shall obtain and maintain all such insurance policies as required hereunder and also such additional insurance as, in Lessee's professional judgment, should be obtained and maintained. Further, upon the Effective Date of this

Lease, Lessee and its agents, professionals, contractors, subcontractors, suppliers and third parties related to the design and construction of the Improvements and its officers and employees shall have the right of access to and throughout and use of the Premises for the purposes of planning and designing the Improvements to be constructed on the Premises. Lessee, at its sole cost and expense, shall make application and obtain all necessary local, state and federal governmental approvals including, but not limited to, such land use and zoning approvals, as may be required under customary and routine regulations and procedures, from the City of Riviera Beach and the Community Redevelopment Agency necessary for use of the Premises by the Lessee. In no event shall Lessor, due to any provision of this Lease, be obligated to take any particular action with regard to regulatory approvals, except to review, in a timely manner, applications submitted by Lessee in accordance with its established processes and in accordance with the applicable provision of law.

1.06 Omitted

1.07 Acceptance of Premises

The Lessee acknowledges that Lessor leases the Premises to Lessee in their "as is" condition, and that Lessor shall have no duty, obligation or liability whatsoever to repair, refurbish or maintain the Premises whether prior to the Effective Date or during the Term of this Lease. Lessee waives the provision of any law, or any right Lessee may have under common law, permitting Lessee to make any repair at Lessor's expense, or to offset the cost of same against any Rent or other sums which may be payable under this Lease.

1.8. Lessor's Designate Representative

As used herein, the Lessor's designated representative shall be the City Manager or such other person as the City Manager may designate from time to time. Unless specifically stated otherwise in this Lease, Lessor's designated representative shall have no authority or right to modify or amend this Lease or interpret or construe any of the covenants or conditions of this Lease. Said authority and right shall rest solely with the City of Riviera Beach City Council as the Lessor.

ARTICLE II
RENT

2.01 Annual Rent

The rent payable in advance by Lessee beginning on the Effective Date for the Term of this Lease for the use and occupancy of the Premises (the "**Rent**") is One Dollar ($1.00) per annum. Lessee is a tax exempt entity as evidenced by tax exemption #85-8015737726C-7. No sales or use tax shall be included or charged with Rent or any other payment required of Lessee pursuant to this Lessee, unless required by law. If so required, the Lessee shall pay for such taxes as may be required by law. Payment of Rent will be mailed to Lessor on the Effective Date and each year thereafter at the address provided herein for Lessor.

2.02 Triple Net Lease

This Lease shall be deemed and construed to be a "triple net lease" and Lessee shall pay to Lessor absolutely net throughout the Term of this Lease, the Rent and other payments, if any are due hereunder, free of any charge, assessments, impositions, expenses, deduction or set off, and under

no circumstances or conditions, whether now existing or hereafter arising, or whether within or beyond the present contemplation of the parties shall the Lessor be expected or required to make any payment of any kind whatsoever (unless to be reimbursed by Lessee) or be under any obligation or liability as to the Premises except as otherwise specifically stated in this Lease; and, Lessee agrees to pay all costs and expenses of every kind and nature whatsoever arising out of or in connection with the Premises which arise or become due from the Effective Date of this Lease and throughout the Term of this Lease, and which, except for the execution and delivery hereof, would or could have been payable by the Lessor, and except as otherwise provided in this Lease.

ARTICLE III
USE OF PREMISES, CONDUCT OF BUSINESS, AND CONSTRUCTION OF IMPROVEMENTS BY LESSEE

3.01 Purpose and Use

Lessee shall use and occupy the Premises for the purpose of operating a school or schools (currently, the Riviera Beach Maritime Academy, a charter high school) in accordance with the laws and regulations of the School District of Palm Beach County and the State of Florida, and/or for providing educational programs and/or for other public purposes, with attendant offices and meeting rooms necessary to provide educational programs, and for no other purpose or use whatsoever, without the prior written consent of the Lessor. Lessee is also bound by 501C(3) purposes and its charters. The Lessee shall not use the Premises for any purpose that conflicts with the purposes set forth herein.

3.02 Conduct

Lessee shall not commit waste on the Premises, nor maintain, commit or permit the maintenance or commission of a nuisance thereon, or use the Premises for an unlawful purpose or unpermitted purpose. Lessee acknowledges that it, its agents, professionals, contractors, subcontractors, suppliers and third parties and its officers and employees and the Premises shall from the Effective Date of this Lease and throughout the Term of this Lease be in full compliance with all federal, state and local statutes, laws, rules and regulations, and shall be properly licensed by all applicable authorities including, but not limited to, as may be required for the lawful operation of the Premises as a school serving children and as otherwise pertain to Lessee's use of the Premises.

3.03 Improvements by Lessee

Lessee agrees to perform, at its own cost and expense, all planning, designing, construction and all other work (or the management thereof) necessary to fully construct, equip and maintain the Premises for Lessee's permitted use of the Premises as specified in Section 3.01 of this Lease. Specifically, Lessee shall construct a school constituting approximately 30,000 square feet (+/-), together with appurtenant offices, parking and exterior improvements (the "**Improvements**").

3.04 Planning and Construction Approval Process

The parties agree that the construction of any Improvements shall be subject to the customary and routine procedures, as applicable, for submission of any plats, plans, specifications or applications for permits in order to comply with applicable codes, laws or regulations of the City of

Riviera Beach, the Community Redevelopment Agency, or another governmental agency having any jurisdiction over the Premises. Lessee agrees to provide Lessor's designated representative with a copy of all approvals, and not less than thirty (30) days prior to the start of any construction, Lessee shall provide Lessor with a complete copy of all construction documents. In no event shall Lessor, due to any provision of this Lease, be obligated to take any particular action with regard to regulatory approvals, except to review, in a timely manner, applications submitted by Lessee in accordance with its established processes and in accordance with the applicable provision of law.

3.05 Design Review and Approval

Design and construction of the Improvements shall be consistent with any prior approved submittals of Lessee to Lessor and Lessor shall have the right, in its reasonable discretion, to reject any aspect of subsequent design that in any material way varies from the prior approved submittals. Construction is not to commence on any Improvements, Alterations or any parts thereof until the Lessor has reviewed and approved the final plans and specifications and only after approvals and permits have been secured from any and all governmental agencies having any jurisdiction over the Premises. Any material variations in the final plans and specifications after written confirmation from the Lessor must be re-approved by the Lessor.

3.06 Miscellaneous Construction Issues

(a) Lessee's construction of the Improvements shall be deemed completed upon the issuance of a Certificate of Occupancy for the Improvements.

(b) In the event a construction lien is filed against the Premises, Lessee shall comply with all applicable provisions of Florida Statutes, Chapter 713, Part I. Lessee, within sixty (60) days after notice from the Lessor or other notice sent directly to Lessee, shall discharge, or shall have construction lien transferred to bond, any construction liens for materials or labor claimed to have been furnished to the Premises on the Lessee's behalf and to indemnify, defend and save Lessor harmless from and against any damage or loss incurred by the Lessor as a result of any such construction lien. Prior to commencement of any Improvements, or Alterations to the Premises, Lessee shall give notice to any contractor, subcontractor, supplier or materialman in privity with Lessee that no right of action against the Lessee, contractor or surety shall involve the Lessor, as a public authority, in any expense pursuant to Section 255.05, Fla. Stat.

(c) After completing construction of the Improvements, any construction, installation, alteration, addition, improvement or other physical change to the Premises or the Improvements ("**Alterations**") requiring a building permit shall require the prior written consent of Lessor, whose consent shall not be unreasonably withheld. Lessee shall submit plans for Lessor's approval of all such Alterations.

(d) Lessor, as the City of Riviera Beach having jurisdictional control over some aspects of the construction of the Improvements and any Alterations thereafter, retains the right to exercise such jurisdictional authority over the Premises and construction of the Improvements and Alterations consistent with its Charter, Code of Ordinances, Resolutions or other policies, including, but not limited to, issuing appropriate "stop work" orders.

(e) Lessee agrees to permit the Lessor's building and fire inspectors, code enforcement

officers, and other authorized building or fire department representatives, agents and employees, access to and right of entry onto the Premises and Improvements, Alterations or any part thereof before, during and after construction for the purposes of monitoring, observing, inspecting and making inquiries in order for the Lessor to determine compliance with this Lease, the approved plans and specifications and any other matter as required by local law, resolution or policy. It is understood by the parties that such activity does not relieve the Lessee of its responsibility for constructing and completing the Improvements or Alterations (or management thereof) pursuant to the covenants and conditions of this Lease and that the Lessor's failure to make such on-site inspections or inquiries shall not constitute a waiver or otherwise limit the Lessor's rights in or the covenants and conditions of this Lease.

(f) Lessee shall be responsible for repairing or paying for the repair of any damaged curbs, sidewalks, landscaping or roads caused by the Lessee or its contractors during construction of the Improvements or Alterations to the Lessor's property.

(g) Lessee shall at all times keep any construction area including storage areas and access areas, free from accumulations of waste, debris and rubbish and otherwise maintain the Premises in accordance with all applicable laws including, but not limited to, the City of Riviera Beach's Code of Ordinances.

(h) All easements including, but not limited to, utility easements, desired or necessary for construction by Lessee or otherwise on the Premises by Lessee shall be subject to the Lessor's prior written consent, which consent shall not be unreasonably withheld. Lessee is expressly prohibited from granting any easements without the prior written approval of the Lessor. Any easement not approved in writing by the Lessor shall be void and without legal effect.

(i) Lessee is encouraged to utilize local businesses and small, minority and women owned businesses in all of Lessee's contracting and subcontracting opportunities in planning, designing, constructing and maintaining the Premises, Improvements and Alterations.

(j) During the construction of the Improvements and Alterations, Lessee shall find suitable alternative parking for construction workers, employees, and visitors if parking is inadequate on the site. Said alternative parking arrangements must be submitted to and approved by Lessor.

3.07 Damage to Premises, Hazardous Substances and Environmental Audit

(a) Lessee shall not do, or suffer to be done, in, on or upon the Premises or as affecting said Premises or adjacent properties, any act which may result in damage to the Premises or adjacent properties, or any part thereof.

(b) Lessee shall not generate, store, produce, place, treat, release, or discharge any contaminants, pollutants or pollution, including, but not limited to, hazardous or toxic substances, chemicals or other agents on, into, or from the Premises or any adjacent lands or waters in any manner not permitted by law. For the purposes of this Lease, "hazardous substances" shall mean and include those elements or compounds defined in 42 USC Section 9601 or which are contained in the list of hazardous substances adopted by the United States Environmental Protection Agency (EPA) and the list of toxic pollutants designated by the United States Congress or the EPA or defined by any other federal,

state or local statute, law, ordinance, code, rule, regulation, order, or decree regulating, relating to, or imposing liability or standards of conduct concerning any hazardous, toxic or dangerous waste, substance, material, pollutant or contaminant. "Pollutants" and "pollution" shall mean those products or substances defined in Chapters 376 and 403, Florida Statutes, and the rules promulgated thereunder, all as amended or updated from time to time. In the event of Lessee's failure to comply with this paragraph, Lessee shall, at its sole cost and expense, promptly commence and diligently pursue any legally required closure, investigation, assessment, cleanup, decontamination, remediation, restoration and monitoring of (1) the Premises, and (2) all off-site ground and surface waters and lands affected by Lessee's such failure to comply, as may be necessary to bring the Premises and affected off-site waters and lands into full compliance with all applicable federal, state or local statutes, laws, ordinances, codes, rules, regulations, orders and decrees, and to restore the damaged property to the condition existing immediately prior to the occurrence which caused the damage. Lessee's obligations set forth in this Section shall survive the termination or expiration of this Lease. This paragraph shall not be construed as a limitation upon obligations or responsibilities of Lessee as set forth herein. Nothing herein shall relieve Lessee of any responsibility or liability prescribed by law for fines, penalties, and damages levied by governmental agencies, and the cost of cleaning up any contamination caused directly or indirectly by Lessee's activities or facilities. Upon discovery of a release of a hazardous substance or pollutant, or any other violation of local, state or federal law, ordinance, code, rule, regulation, order or decree relating to the generation, storage, production, placement, treatment, release or discharge of any contaminant, Lessee shall report such violation to all applicable governmental agencies having jurisdiction, and to Lessor, all within the reporting periods of the applicable agencies.

(c) At Lessor's discretion, but only if activity on the Premises during the Lease Term provides reasonable grounds to warrant the request, Lessor may request and Lessee shall provide Lessor with a current Phase I environmental site assessment conducted in accordance with the State of Florida Department of Environmental Protection, Division of State Lands' standards prior to termination of this Lease, and if necessary a Phase II environmental site assessment.

3.08 Signs, Lessee Fixtures

Lessee may install, change, remove, enlarge and alter, at Lessee's sole cost, expense and in compliance with applicable law, including without limitations the City's sign code, signs at the Premises.

3.09 Safety and Loss

In the case of accidents, thefts, labor disputes, riots, or other similar incidents, Lessee shall immediately notify Lessor and, if required, the local authorities. In the event of damage or loss not insured under the insurance required under this Lease by the Lessee or otherwise available, Lessee shall promptly remedy such condition so that same does not present a threat to public safety. The Lessee shall be responsible for the safety and security measures undertaken at the Premises. The Lessee shall at all times take all steps reasonable or necessary to avoid injury, loss or damage to

persons or property on and at the Premises.

ARTICLE IV
REPAIR AND MAINTENANCE OF PREMISES

4.01 Responsibilities of Lessee

(a) Lessee at its sole cost and expense agrees to repair and maintain the Premises and keep the Improvements, Alterations and any parts thereof in good order and condition and consistent with the City's code of ordinances. Lessee's responsibility includes, but is not limited to, the repair, maintenance, and if necessary, the periodic replacement of the Improvements, Alterations or parts thereof; roof, roof drains, interior and outside walls, foundation and structural portions of any building or structure (both interior and exterior), painting all interiors and exteriors, on-site stormwater facilities, the fire sprinkler and electrical systems of the Premises, sidewalks, grounds, parking areas, driveways and access roads, landscaping, irrigation system, outdoor lighting, fencing, and the plumbing and sewage pipes servicing the Premises and located in the Premises. Lessee will also maintain, at its sole cost and expense, the public right of way landscaping and/or grass between the side walk and the curb in front of and/or adjacent to the Property (provided that Lessee shall not have the obligation to maintain any irrigation system in such right of way which serves areas beyond the right of way area in front of the Premises). All equipment and systems shall be maintained to provide reliable service without unusual interruption, disturbing noises, exposure to fire or safety hazards and without emissions of dirt or other hazardous substances, which includes but is not limited to the repair, maintenance, and replacement if necessary, of the HVAC systems of the Premises. Lessee shall also maintain at its sole costs and expense such preventative maintenance and repairs as are required to keep any and all warranties on the HVAC, plumbing, electrical, fire sprinklers, alarm and other building systems, as well as all other warranties covering any portion of the interior of the Improvements or Alterations in good standing and in full force for the state length of such warranty.

(b) Lessee shall have the right, but not the obligation, to install, maintain and replace outdoor recreational and athletic facilities, including, without limitation, play and sports equipment, and any other such equipment which presently exists or is later installed by the Lessee on the Premises during the Term of this Lease, and shall keep the aforesaid in the same condition as it existed at the Effective Date or time of installation, normal wear and tear expected.

(c) If Lessee shall fail to properly repair or maintain any item required to be repaired or maintained by Lessee under this Lease or fails to perform or pay for services or utilities as required by this Lease, within thirty (30) days of notice from the Lessor of the need for such repair, maintenance, performance or payment, the Lessor may complete such repairs, perform the necessary maintenance, or provide or pay for services or utilities and Lessee shall reimburse the Lessor for all reasonable expenses incurred by Lessor in doing so. If the Lessee fails to respond within thirty (30) days of notice from Lessor of the need for replacement of any item required to be replaced, by setting forth a reasonable schedule for replacement acceptable to Lessor, the Lessor at its sole discretion shall

undertake the replacement thereof and the Lessee shall reimburse the Lessor for all reasonable expenses incurred by Lessor in doing so. Notwithstanding the above, Lessor reserves the right to pursue termination upon default in accordance with Article IX of this Lease in the event Lessee fails to properly repair, maintain or replace any items required to be repaired, maintained or replaced or fails to perform or pay for services or utilities as required under this Lease.

4.02 Lessor's Right to Inspect and Repair

Lessor, through its authorized law enforcement officers, building inspectors, fire department employees or code enforcement officers, shall have the right, upon twenty-four (24) hours written notice to the Lessee (except that no notice need be given in case of emergency), to enter the Premises for the purposes stated in Section 3.06(e) and for the purpose of inspection and maintenance of, or the making of repairs or replacements to the Premises or the Improvements, Alterations or any parts thereof, which Lessor has the right to perform pursuant to Section 4.01, or for the purpose of complying with laws, regulations or other requirements of government authorities. Any such entrance into the Premises by Lessor and any such inspection, maintenance, repair or replacement shall not constitute an eviction of this Lease in whole or in part. If Lessee's agents or employees are not personally present to open and permit entry into the Premises, at any time, when for any reason an entry therein shall be necessary or permissible, Lessor or Lessor's agents may enter the same without liability therefore and without in any manner affecting the obligations and covenants of this Lease. Except as otherwise provided herein, nothing contained in this Section shall be deemed or construed to impose upon the Lessor any obligations, responsibility or liability whatsoever, for the care, maintenance or repair of the Premises, Improvements, Alterations or any part thereof.

ARTICLE V
UTILITIES AND SERVICES

5.01 Responsibility of Lessee

(a) Lessee shall furnish, at its sole expense, all infrastructure and/or distribution lines, connections, meters, taps, etc. required to provide water, gas, electric current, oil or other forms of power, fuel or utility to the Premises. In addition Lessee shall pay charges for water, sewer, garbage and trash collection. The Lessee will pay directly to the utility company or the provider of such service any and all applicable deposits, hook-up fees and charges relative to utilities used by Lessee or consumed on the Premises. The Lessee shall ensure that public utilities necessary for the operation of the Premises, Improvements and Alterations and required in accordance with local codes are available and operable at the site throughout the Term of this Lease. Lessee shall be responsible for having all utilities turned off when this Lease expires or is terminated.

(b) Lessee, at its sole expense, shall provide for all janitorial services in and about the Premises; for all landscaping services in and about the Premises; and, shall cause all portions of the Premises to be regularly exterminated against infestation by vermin, roaches, rodents, termites or similar pests.

(c) Lessee shall assume full responsibility for and shall pay all liabilities that accrue to the Premises or to the Improvements or Alterations thereon, including, but not limited to, any

and all drainage and special assessments or taxes of every kind and all mechanic's or materialman's liens which may be hereafter assessed and levied against the Premises. Lessor shall provide Lessee with copy of any notices it receives regarding any assessments, taxes or liens for the Premises promptly upon receipt. Lessee shall pay all such assessments, taxes or liens coming due prior to the expiration or termination of this Lease.

ARTICLE VI
RISK OF LOSS AND INSURANCE

6.01 Insurance by Lessee

(a) All Risk: The Lessee shall, in any event and without prejudice to any other rights of the Lessor, bear all risk of loss of or damage to the Premises arising from any causes whatsoever with or without the fault of the Lessor including, but not limited to, fire; lightning; hurricane; storm; tempest; explosion; impact; aircraft; vehicles; smoke; riot; civil commotion; bursting or overflowing of water tanks, apparatus or pipes; boiler and machinery coverage against loss or damage by explosion of steam boilers, pressure vessels and similar apparatus now or hereafter installed; flood; labor disturbances; earthquake; malicious damage; or any other casualty or act of God, and shall maintain, at the Lessee's expense, at all times during the Term of this Lease (beginning on the Effective Date) an "All Risk" insurance policy against the risks enumerated above with a reputable insurance company authorized to do business in the State of Florida and of recognized responsibility. Such insurance shall be maintained at all times from the Effective Date of this Lease in an amount and form specified below in this Section 6.01. Provided always, however, that the Lessee shall bear all risk of loss of or damage to the Premises from the Effective Date of this Lease throughout the Term of this Lease for any and all liabilities and, work or responsibilities required to be performed under the covenants and conditions of this Lease. In addition, the Lessee shall maintain at its sole expense, all that insurance further required in accordance with this Section 6.01. Maintenance of the insurance required in accordance with this Section 6.01 shall effect no limitation on the Lessee's liability with respect to any loss or damage resulting from the willful misconduct, lack of good faith or negligence of the Lessee or any of its officers, agents, employees, invitees or guests or by any failure on the part of the Lessee to fully perform its obligations under this Lease.

(b) Lessee's Insurance: The Lessee at its own expense shall carry and maintain from the Effective Date of this Lease and throughout the Term of this Lease, with regard to the use of the Premises, construction, maintenance and operation of the Improvements and Alterations, the following insurance:

(1) All Risk Property and Casualty Insurance against the risk enumerated above in this Section 6.01 in an amount at all times equal to at least ninety percent (90%) of the full replacement value of the existing structures, Improvements and Alterations to the Premises.

(2) Public Liability and Property Damage Insurance including, but not limited to, insurance against assumed or contractual liability under this Lease with respect to

the Premises, the Improvements and the Alterations, to afford protection with limits of liability in amounts approved from time to time by the Lessor, but not less than $1,000,000 in the event of bodily injury and death to any one persons in any one accident ($2,000,000 aggregate), and not less than $1,000,000 in property damage.

(3) Worker's Compensation or similar insurance in the form and amounts required by Florida law.

(4) All other types of Insurance imposed by applicable legal requirements or customarily carried and maintained by owners and operators of similar facilities including, but not limited to business automobile liability insurance, and employer's liability insurance. It shall be Lessee's sole responsibility to determine whether any or all of the above insurance should be obtained and maintained from the Effective Date of this Lease. Lessee's failure to obtain and maintain insurance from the Effective Date of this Lease shall be at its sole risk and expense.

(c) Contractor Insurance: After the Effective Date and during the entire Term of this Lease, Lessee shall require any general contractor performing any work on the Premises to carry and maintain at no expense to the Lessor:

(1) Comprehensive General Liability Insurance including, but not limited to, contractor's liability coverage and contractual coverage of at least $1,000,000 with respect to personal injury or death, and $1,000,000 with respect to property damage;

(2) Worker's compensation or similar insurance in the form and amounts required by Florida law.

(d) Policy Provisions: All insurance which this Lease requires the Lessee and its contractors to carry and maintain or causes to be carried or maintained pursuant to this Section 6.01 shall be in such forms, for such amounts, for such periods of time and with such insurers as the Lessor shall approve. All insurance policies required hereunder shall be written by insurance companies with a minimum rating of "A" or its equivalent as per A.M. Best, Moody's or other nationally recognized rating agency. Further, all policies or certificates issued by respective insurers for comprehensive general liability, public liability and all-risk property and casualty insurance will name the Lessor as a primary and non-contributory additional insured and shall provide that any losses shall be payable notwithstanding any act or failure to act or negligence of the Lessee, the Lessor or any other person; provide that no cancellation, reduction in amount or material change in coverage thereof shall be in effect until at least thirty (30) days after receipt by the Lessor of written notice thereof; and, shall be reasonably satisfactory to the Lessor in all other respects. In no circumstances will the Lessee be entitled to assign to any third party rights of action which the Lessee may have against the Lessor.

(e) Delivery of Polices: The Lessee shall deliver promptly to the Lessor a certificate of insurance or a certified copy of each policy of insurance required by this Lease upon the Effective Date or as otherwise required herein and shall also deliver no later than thirty (30) days prior to the expiration of any such policy, a certificate of insurance or a certified copy of each renewal policy covering the same risks, together with appropriate evidence of payment or the premiums therefore.

6.02 Loss or Damage

Unless agreed to in writing by the Lessor in its reasonable sole discretion, in the event that the Premises, Improvements or Alterations or any part thereof is damaged or destroyed by fire or by other casualty, whether or not such casualty is the fault of or results from the negligence of the Lessee, the Lessee will repair, restore or rebuild the Premises, Improvements, Alterations or any part thereof to its original state, or such modified state as submitted by Lessee and approved by Lessor, by applying all insurance proceeds to payment of the cost of such repair, reconstruction or restoration. Such repair, reconstruction or restoration shall commence within one hundred twenty (120) days of the date of the loss or damage or the receipt of the insurance proceeds, whichever is greater, subject to extension as reasonably required to obtain from Lessor approvals required for repair, reconstruction or restoration of the Improvements. Any repairs or reconstruction shall be performed in accordance with plans and specifications approved by Lessor. If the Lessee refuses or fails to repair, restore or rebuild the Premises, Improvements or Alterations or any such part thereof damaged or destroyed as required herein, the Lessor may by appropriate written notice to the Lessee terminate this Lease for Default in accordance with Article IX hereof. In such event, title to the Premises, Improvements and Alterations and any part thereof shall vest in the Lessor without notice or further action being required on the Lessor's part and the Lessor may undertake the repair, reconstruction and restoration of the Premises, Improvements and Alterations or any part thereof and may complete it by contract or otherwise, and may take possession of and use any materials at the Premises necessary for completing the work. The Lessee and any of its sureties shall be liable for any damages or costs incurred by the Lessor resulting from the Lessee's refusal or failure to complete the work including, but not limited to, such reasonable costs incurred by the Lessor to reconstruct, repair or restore the Premises, Improvements and Alterations or any part thereof including, without limitation, attorney's fees. This liability includes any increased costs to the Lessor in completing the work whether or not such increased costs are covered by insurance proceeds received by Lessee for said damage or destruction.

Notwithstanding anything to the contrary set forth in this Section 6.02, in the event that the Improvements are damaged or destroyed by fire or by other casualty to the extent of more than fifty percent (50%) such that the Improvements are not useable for the purposes intended by Lessee, or the improvements at the Premises cannot be repaired within 180 days after the casualty, then in such case, Lessee may terminate this Lease by giving Lessor written notice to such effect within one hundred twenty (120) days after the date of such casualty, and upon such date as specified in said notice, Lessee shall vacate the Premises and this Lease shall terminate, whereupon Lessee and Lessor shall be released from any further obligation hereunder. Upon such termination by Lessee, any insurance proceeds shall be utilized to demolish the remaining Improvements and render the Premises as a vacant lot. Subject to the rights of a Leasehold Mortgagee, the unused insurance proceeds attributable to the cost of constructing the Improvements (but not to personal property) shall be paid to Lessor.

6.03 Personal Property

All of Lessee's personal property placed or moved in or on the Premises shall be at the risk of the Lessee or owner thereof. Unless otherwise provided herein, Lessor shall not be liable for any damage to said personal property.

6.04 Indemnification

(a) Lessee covenants and agrees with Lessor from the Effective Date and throughout the Term of this Lease that Lessee shall indemnify and save harmless Lessor, its officers, agents and employees, from and against any and all claims, debts, suits, actions, demands, damages, obligations and/or causes of action which may be made against or upon the Lessor, its officers, agents and employees, or against Lessor's title to the Premises, arising after the Effective Date and during the Term of this Lease by reason of or in connection with any alleged act or omission, including all claims, liabilities, losses, and/or causes of action which may arise from any negligent act, recklessness, or intentional wrongful conduct or omission of Lessee, its officers, agents or employees or for any claims, liabilities, losses, and/or causes of action which may arise from any negligent act of the Lessor, its officers, agents, or employees. Lessee agrees to defend Lessor, with Lessee agreeing to pay all court costs and reasonable attorney's fees incurred by Lessor in effecting such defense (including all appellate levels), as and when said costs and fees become due and payable, in addition to any other sums which the Lessor may be called upon to pay by reason of the entry of a judgment against Lessor in the litigation in which such claim is asserted.

(b) Lessee shall also protect, defend, indemnify and hold Lessor harmless against any loss or damage, including reasonable attorney's fees and costs, arising out of or resulting from any claim, action or lawsuit brought by a third party to challenge the validity or enforceability of this Lease, or to enjoin this Lease arising solely from a claim that Lessee lacks capacity to sign or enter into, or improperly executed this Lease. If any litigation is instituted against Lessor and Lessee as a result of the foregoing, then Lessee shall defend Lessor and save Lessor harmless from any and all attorney's fees and costs that may be incurred, both at trial and all appellate levels.

(c) Lessee shall pay all claims, losses, liens, fines, settlements or judgments of any nature whatsoever in connection with the foregoing indemnifications including, but not limited to, all costs, expert witness fees, reasonable attorney's fees, and court and/or arbitration costs. These indemnifications shall survive the term of this Lease.

(d) Nothing in the Lease shall constitute a waiver of sovereign immunity of Lessor nor shall the same be construed as an agreement by the Lessor to be sued by third parties.

6.05 Contractor's Indemnification

Lessee shall require in any and all contracts with any and all contractors, subcontractors, suppliers, materialmen, design professionals or the like in privity with Lessee, for any and all work to be performed at or for the Premises an indemnification provision substantially similar to the indemnification contained in Section 6.04(a) for the indemnification of the Lessor from such contractors, subcontractors, suppliers, materialmen, design professionals or the like unless another indemnification provision is required by Florida law.

ARTICLE VII
ENCUMBRANCE OR ASSIGNMENT OF LEASEHOLD

7.01 Leasehold Mortgages

(a) Lessee shall have the right, at any time and from time to time, to encumber, hypothecate or mortgage Lessee's leasehold estate. In the event the Lessee so elects to mortgage its leasehold interest ("Leasehold Mortgage"), such mortgage shall in no way obligate Lessor to pay or repay the mortgage. In the event of a Leasehold Mortgage, the lender or its assigns shall be deemed the "Leasehold Mortgagee" and the Lessee or its assigns shall be deemed the "Leasehold Mortgagor." Lessor owns the fee simple of the Premises and in no event shall any Leasehold Mortgage be deemed a mortgage on Lessor's interest in the Premises. Lessor's interest in the Premises shall be superior in title and right to any Leasehold Mortgage and the Lessor's fee simple interest shall not be affected by any Leasehold Mortgage.

(b) The Leasehold Mortgagee shall have no interest in the Premises other than its interest as Leasehold Mortgagee or as Tenant under and pursuant to this Lease or any new Lease.

(c) Should Lessee give a valid Leasehold Mortgage on its leasehold estate, and on Lessee's Improvements, to a Leasehold Mortgagee and provided notice of such Leasehold Mortgage and notice address of such Leasehold Mortgagee has been provided to Lessor, it is agreed by and between Lessor and Lessee as follows:

(i) Lessor agrees to provide such Leasehold Mortgagee with copies of any notices under this Lease, including without limitation, notices of default issued pursuant to Article IX of this Lease, and delivered by Lessor to Lessee. Any such notice shall state the nature of the notice or the alleged default and shall specify the default and the date when the condition must be cured pursuant to the provisions contained in this Lease. Any Leasehold Mortgagee must designate in writing to the Lessor an address to which all notices may be hand-delivered or served by recognized overnight delivery service. Delivery shall be deemed accepted upon hand delivery or receipt from overnight delivery service. There shall be no additional time given pursuant to the "mailbox rule" for delivery, response, and/or cure periods. Notice to the Lessee shall not be effective unless notice is also provided to the Leasehold Mortgagee who shall designate in writing to the Lessor an address to which all notices may be hand-delivered or served by overnight delivery service.

(ii) Defaults and Cure Rights. In the event of a default by Lessee hereunder, Lessor shall accept any curative acts undertaken by or at the instigation of any Leasehold Mortgagee in accordance with the terms of this Lease as if the same had been undertaken by Lessee. The Leasehold Mortgagee is not entitled to any additional time or cure rights other than those specified in this or Article IX of this Lease. Notwithstanding the foregoing, in the event of any Default by Lessee under any of the provisions of this Lease, and if within forty five (45) days of notice of the Default, the Leasehold Mortgagee shall give Lessor written notice that it intends to undertake the curing of such Default, or to cause the same to

be cured, or to exercise its rights to acquire the interest of Lessee in this Lease and in the Improvements by foreclosure or otherwise, and shall immediately commence and then proceed with all due diligence to do so, whether by performance on behalf of Lessee of its obligations under this Lease or by entry on the Property by foreclosure or otherwise, then Lessor agrees that the time for curing said Default shall be extended up to ninety days for the benefit of the Leasehold Mortgagee so long as (1) the Leasehold Mortgagee is with all due diligence and in good faith continually engaged in effecting such foreclosure or in the curing of such Default, and (2) all Rent is being paid currently.

(iii) In the event of a default under this Lease by Lessee, the Leasehold Mortgagee may exercise with respect to the Premises any right, power or remedy under the Leasehold Mortgage which is not in conflict with any of the provisions of this Lease.

(iv) There shall be no merger of Lessee's Leasehold Estate with the fee estate in the Premises by reason of the fact that Lessee's Leasehold Estate may be held directly or indirectly by or for the account of any person who shall also hold directly or indirectly the fee estate, or any interest in such fee estate, nor shall there be any such merger by reason of the fact that all or any part of Lessee's Leasehold Estate may be conveyed or mortgaged to a Leasehold Mortgagee who shall also hold directly or indirectly the fee estate, or any part thereof, in the Premises or any interest of Lessor under this Lease.

(v) No liability for the payment of Rent or the performance of any of Lessee's covenants and agreements hereunder shall attempt to or be imposed upon any Leasehold Mortgagee by reason of its exercise, or attempt to exercise any of the rights provided for or reserved herein, unless such Leasehold Mortgagee expressly assumes the same in writing, all such liability being hereby expressly waived by Lessor; provided, such waiver shall not be deemed a cure of any default of the performance of any of Lessee's covenants and agreements in this Lease.

(vi) In the event this Lease is terminated by or against Lessee, prior to the expiration of the Term, Leasehold Mortgagee may within thirty (30) days after receipt of notice of such termination, elect to enter into a new lease of the Premises with Lessor ("New Lease") in accordance with and subject to the terms and conditions set forth herein, including the permitted uses, provided that Leasehold Mortgagee or its designee or assignee pays (1) all sums due under this Lease at the time of such termination, (2) all costs incurred for the recovery of possession of the Premises, and (3) all document preparation costs. The New Lease shall be effective on the date of termination of this Lease, at the rent and upon all the agreements, terms, covenants and conditions hereof. The Lessee under the New Lease shall be the Leasehold Mortgagee or its designee reasonably approved by Lessor ("New Tenant").

7.02 Assignment or Subletting of Leasehold

Lessee may not assign this Lease in whole or in part, nor sublet, enter into any concession or license agreement with respect to all or any portion of the Premises, Improvements, Alterations or parts thereof, subject to the provisions of Section 7.03 herein, without the prior written consent of the Lessor in each instance. The consent by the Lessor to any assignment or subletting shall not constitute a waiver of the necessity for such consent to any subsequent assignment or subletting. It is understood that the Lessor may not, under any circumstances, be required or compelled to grant such consent, other than as set forth below in this Section 7.02. For the purposes hereof, any merger, consolidation or transfer by sale of stock or assignment of interest, or otherwise, of the ownership or control of Lessee, if Lessee shall be a corporation, partnership or trust, shall constitute an assignment of this Lease; provided however, Lessor shall not unreasonably withhold its approval of any merger, consolidation or assignment to a successor entity which provides the same programs and services as the named Lessee. This prohibition against assignment and subletting specifically includes a prohibition against Lessee entering into any management agreement to manage the Premises, Improvements and Alterations or any part thereof, without the prior written consent of the Lessor. This prohibition against assignment and subletting shall be construed to include a prohibition against any assignment or subleasing by operation of law, legal process, receivership, bankruptcy or otherwise, whether voluntary or involuntary and shall include a prohibition against any encumbrance of all or any part of the Lessee's leasehold interest. Notwithstanding any assignment, sublease or concession agreement duly approved by the Lessor, Lessee shall remain fully liable on this Lease and shall not be released from performing any of the covenants and conditions hereof.

7.03 Use of Premises by Outside Persons

Lessee may permit other persons to use the Premises, Improvements and Alterations or any part thereof on the condition that such use is in accordance with this Lease. For purposes of this Section, "Persons" includes, but is not limited to, any individuals, group, association, non-profit, for-profit organization (public or private). Lessee shall be solely liable for such use by other Persons. This Section shall not be construed to allow any encumbrances, assignment or sublease and shall be read in accordance with all other covenants and conditions in this Lease.

ARTICLE VIII
EMINENT DOMAIN

It is understood and agreed that, if at any time after the Effective Date of this Lease or during the Term of this Lease, the Premises, Improvements, Alterations or any part thereof be taken, appropriated or condemned by reason of eminent domain, there shall be such division of the proceeds and awards in such condemnation proceedings and such abatement of Rent and other adjustments made, as shall be just and equitable under the circumstances. If Lessee and Lessor are unable to agree upon what division, annual abatement of Rent or other adjustments are just and equitable within thirty (30) days after such award shall have been made, then the matters in dispute shall, by appropriate proceedings, be submitted to a court having jurisdiction of the subject matter of such controversy in Palm Beach County, Florida, for its decision and the determination of the matters in dispute. If the legal title to the entire Premises be wholly taken by condemnation, the Lease shall automatically and without notice be terminated. If a partial taking by an entity renders the remainder

of the Premises unsuitable for the permitted use hereunder, then Lessee shall have the right to terminate this Lease as of the date Lessee is required to surrender possession to the condemning authority; however, nothing contained herein shall authorize Lessor to be the condemning authority.

Although title to the Improvements and Alterations and all parts thereof placed by Lessee upon the Premises will pass to Lessor upon the expiration or termination of this Lease, nevertheless, for purposes of condemnation, the fact that Lessee places such Improvements and Alterations and all parts thereof upon the Premises at Lessee's sole expense, shall be taken into account and the deprivation of Lessee of the use of such Improvements and Alterations and any part thereof shall, pro tanta, be an item of damage in determining the portion of the condemnation award to which Lessee is entitled. In general, it is the intent of this Article VIII that upon condemnation, the parties shall share in their awards to the extent that their interests respectively are depreciated, damaged or destroyed by the exercise of the right of eminent domain.

ARTICLE IX
DEFAULT

9.01 Default by Lessee

The occurrence of any one or more of the following shall constitute an Event of Default by Lessee under this Lease: (i) Lessee shall fail to perform or observe any of the covenants or conditions contained in the Lease on Lessee's part to be performed or observed; (ii) Lessee shall vacate or abandon the Premises; (iii) Lessee shall fail to pay or otherwise resolve any taxes, assessments or liens as provided for herein; (iv) Lessee shall fail to obtain or maintain the Insurance required herein; (v) Lessee shall fail to use any and all insurance proceeds received from insurance required under this Lease to restore, repair or reconstruct the Premises, Improvements, Alterations or any parts thereof as required in this Lease; (vi) Lessee shall encumber the Premises or its leasehold interest without Lessor's prior written consent if required under Article VII; (vii) the filing of a voluntary or involuntary petition under any federal or state bankruptcy, insolvency or similar law; or, (viii) Lessee's leasehold estate shall be taken by execution, attachment or process of law;. If any Event of Default occurs and is not cured by Lessee within sixty (60) days following written notice thereof from Lessor, or if not capable of being cured within such cure period, then in the event Lessee fails to commence to cure during said sixty (60) days and thereafter diligently pursue such cure, then, at any time thereafter while the Event of Default continues, Lessor shall have the right, at its sole option, to cure the default and Lessee shall reimburse Lessor for all reasonable expenses incurred by Lessor in doing so including, but not limited to, reasonable attorney's fees and court costs (at all trial and administrative levels); to give Lessee notice that Lessor intends to terminate this Lease upon a specified date no less than three (3) days after the date the notice is received by Lessee, and this Lease shall then terminate on the date specified as if that date had been originally fixed as the expiration date of the Term of this Lease; or, to afford Lessee a longer period of time to cure the default. If, however, the default is cured within said sixty (60) day period, or as applicable, commenced to cure within the sixty (60) day notice period and thereafter diligently pursued such cure, this Lease will continue. If the default is not cured, or as applicable commenced and thereafter diligently pursued within the sixty (60) day notice period, and the Lessor terminates this Lease, the Lessor shall have the right to re-enter said Premises, including all Improvements, Alterations or any

parts thereof with or without process of law, with the Lessee hereby waiving any demand for possession of the Premises, Improvements, Alterations or parts thereof; and, the Lessee covenants and agrees that upon said termination of said Lease, Lessee will surrender and deliver up the said Premises peacefully to the Lessor, its agents and attorneys, immediately upon said expiration of the Term of this Lease; and, if Lessee, its agents, attorneys, employees, and invitees shall hold the said Premises or any part thereof one (1) day after the same should be surrendered according to the covenants and conditions of this Lease, Lessee and/or its agents, attorneys, employees and invitees shall be deemed guilty of forcible detainer of the Premises and shall be subject to eviction or removal, forcibly or otherwise, as permitted by law. Nothing herein contained shall be construed as precluding the Lessor from having such remedy as may be or become necessary in order to preserve Lessor's rights and the interests of the Lessor in the Premises and in this Lease even before the expiration of the grace or notice periods provided for in this Section 9.01 if, under the particular circumstances then existing, the allowance of such grace or the giving of such notice would prejudice or endanger the rights and estate of Lessor in the Premises, this Lease or the general safety, health or welfare.

9.02 Default by Lessor

Lessor shall be in default of this Lease if Lessor shall fail to observe or perform any provision, covenant or condition of this Lease on Lessor's part to be observed or performed, and Lessor shall fail to remedy same within sixty (60) days after notice from Lessee. In the event the default is of such nature that it cannot be reasonably cured within the foregoing sixty (60) day period, Lessor shall be entitled to a reasonable period of time under the circumstances in which to cure said default, provided that Lessor diligently proceeds with the curing of the default. In the event that the default is not cured by Lessor within the foregoing time period, Lessee, at Lessee's option, may cure either said default and Lessor shall reimburse Lessee for all expenses incurred by Lessee in doing so, or Lessee may give to the Lessor a three (3) day notice specifying that Lessee intends to terminate this Lease. Upon receipt of said notice and expiration of the three (3) day time period, this Lease and all obligations of Lessee hereunder shall terminate and Lessee shall thereupon be relieved of all further obligations hereunder.

9.03 Landlord/Tenant Relationship

Although this is a long term lease, the parties understand and agree that the relationship between them is that of landlord and tenant, and Lessee specifically acknowledges that the statutory proceedings in the State of Florida relating to the recovery of possession of the Premises accrue to the landlord hereunder.

9.04 Property of Lessor as Liquidated Damages for Default

It is further covenanted and agreed by and between the parties hereto that in the event of the termination of this Lease due to Lessee's default, subject to the rights of the holder of any Leasehold Mortgage, all of the right, estate and interest of Lessee in and under this Lease and in the Premises, Improvements, Alterations or any part thereof, together with all insurance proceeds paid or payable hereunder, shall without compensation made therefore unto Lessee, at once pass to and become the property of the Lessor, not as a penalty or forfeiture, but as <u>liquidated damages</u> to the Lessor because of such default by Lessee and the consequent termination of this Lease; each of the parties acknowledging it to be the fact that for said default and consequent termination of a long-term lease

of this character, Lessor will sustain substantial damages, being damage of such character as to make it most burdensome and tedious, if not actually impossible, to ascertain with mathematical precision, and each of the parties therefore having agreed upon this provision for liquidated damages in the interests of obviating what would otherwise be burdensome and difficult litigation to maintain or to defend, as the case may be; and, this provision for liquidated damages has been taken into account by both parties in fixing the Term of and the consideration for the making of this Lease.

ARTICLE X
QUIET ENJOYMENT

Upon the Effective Date and upon the observance and performance of all the covenants, provisions and conditions on Lessee's part to be observed and performed, Lessee shall peaceably and quietly hold and enjoy the Premises commencing on the Effective Date and for the Term hereby demised without hindrance or interruption, subject to the covenants and conditions of this Lease.

ARTICLE XI
LESSEE TO COMPLY WITH ALL LAWS

Lessee shall comply with all laws, ordinances, resolution and orders of federal, state and local authorities pertaining to the Premises, Improvements and Alterations or any part thereof. Lessee at its sole expense shall comply with all laws, rules, orders, ordinances, directions, regulations and requirements of federal, state and local authorities pertaining to Lessee's use of the Premises and with the recorded covenants, conditions and restrictions, including without limitation, all applicable federal, state and local laws, regulations or ordinances pertaining to air and water quality; Hazardous Materials, waste disposal, air emissions and other environmental matters, all zoning and other land use matters, and utility availability, and with any lawful direction of any public officer or officers pursuant to law, which shall impose any duty upon Lessor or Lessee with respect to the use or occupation of the Premises. Lessee shall pay at its sole expense all costs, fines, penalties, damages and/or other related expenses which may be imposed because of the failure of Lessee to comply with this Article XI and Lessee shall indemnify Lessor from any and all liability arising from such non-compliance.

ARTICLE XII
SURRENDER OF PREMISES

Lessee shall on or before the last day of the Term of this Lease, whether by termination or expiration, peaceably and quietly leave, surrender and yield upon to Lessor, the Premises, together with any and all equipment or personal property but excluding fixtures, furnishings, appliances or other personal property located at or on the Premises and used by Lessee in the maintenance, management and operation of the Premises, free of all liens, claims and encumbrances and rights of others, together with all structural changes, Improvements, Alterations and parts thereof which may have been made upon the Premises, in good order, condition and repair, reasonable wear and tear expected, subject, however to the subsequent provisions of this Article XII. Any property which, pursuant to the provision of this Article XII, is removable by Lessee on or at the Premises upon the

termination or expiration of this Lease and is not so removed, may at the option of the Lessor, be deemed abandoned by Lessee and either may be retained by Lessor as its property or may be removed and disposed of at the sole expense of Lessee in such a manner as the Lessor sees fit. If the Premises and personal property shall not be surrendered at the end of the Term of this Lease as provided in this Article XII or as elsewhere specified in this Lease, Lessee shall make good to Lessor all damages and expenses (including reasonable attorney's fees and costs at all trial and administrative levels) which Lessor shall suffer by reason thereof, and shall indemnify Lessor against all claims made by any succeeding tenant or purchaser, so far as such delay is occasioned by the failure of Lessee to surrender the Premises as and when herein required.

ARTICLE XIII
FORCE MAJEURE

Either party hereto shall be excused from performing any of its respective obligations or undertakings provided in this Lease, except as provided in Article XII (Surrender of Premises) for so long as the performance of such obligations are prevented or delayed, retarded or hindered by act of God, whether of unusual severity, fire, earthquake, flood, hurricane, explosion, action of the elements, war, invasion, insurrection, riot, mob, violence, sabotage, malicious mischief, inability to produce or general shortage of labor, equipment, facilities, materials or supplies in the open market, failure of transportation, strikes, lockouts, action of labor unions, condemnation, public requisition, laws, order of government or any other cause, whether similar or dissimilar to the foregoing, not within the reasonable control of the respective party.

ARTICLE XIV
REPRESENTATIONS

Each party hereto represents that: (i) it has full corporate power and authority to execute this Lease; (ii) its Board of Directors or Council has duly authorized, empowered and directed it to enter into this Lease and to consummate the obligations and covenants contemplated hereby; (iii) this Lease constitutes a valid and binding corporate obligation and is enforceable in accordance with its covenants and conditions; and, (iv) it is not limited, barred nor prohibited from entering into or performing any of the obligations and covenants required hereunder, whether due to contractual, statutory, legal or financial impediments except as set forth herein.

ARTICLE XV
NO DISCRIMINATION

As a condition of obtaining this Lease, Lessee hereby agrees not to discriminate against any individual because of that individual's race, color, religion, sex, national origin, age, handicap, or marital status with respect to any activity occurring within the Premises or upon lands adjacent to and used as an adjunct of the Premises.

ARTICLE XVI
RIGHT OF AUDIT

Upon prior request of Lessor to comply with audit requirements, Lessee shall make available to the Lessor all financial and other records relating to this Lease and Lessor shall have the right to audit such records at any reasonable time. This right shall be continuous until this Lease expires or is terminated.

ARTICLE XVII
MISCELLANEOUS

17.01 Notices and Consents

Any consents, approvals and permissions by Lessor shall be effective and valid only if in writing and duly executed by the consenting, approving or permitting party and any notice by either party to the other shall be in writing and shall be deemed to be duly given and received only if and when hand delivered, mailed prepaid by certified mail, return receipt requested, or sent via nationally recognized overnight courier service, addressed:

(a) if to Lessor at:

City Manager
City of Riviera Beach
600 West Blue Heron Blvd.
Riviera Beach, FL 33404

with a copy to: Office of the City Attorney
City of Riviera Beach
600 West Blue Heron Blvd.
Riviera Beach, FL 33404

(b) if to Lessee at:

Riviera Beach Maritime Academy, Inc.
251 West 11th Street
Riviera Beach, FL 33404
Attn: President

with a copy to:

William L. Mueller, Esq.
4 Executive Campus, Suite 200
Cherry Hill, NJ 08002

Or at such other addresses as Lessor or Lessee, respectively, may designate in writing.

17.02 Time is of the Essence

Time is of the essence with respect to the performance of every covenant and condition of this Lease in which time of performance is a factor. Any reference to a certain number of days shall be deemed to be calendar days.

17.03 Severability

If any covenant or condition of this Lease or the application thereof to any person or circumstances, shall to any extent be invalid or unenforceable, the remainder of this Lease, or the application of such covenant or condition to persons or circumstances other than those as to which it is invalid or unenforceable, shall not be affected thereby, and each covenant and condition of this Lease, shall be valid and enforceable to the fullest extent permitted by law.

17.04 Applicable Law, Venue and Remedies

This Lease shall be construed and enforced under the laws of the State of Florida, except as modified herein, and venue for any action to construe or arising out of or from this Lease shall be in Palm Beach County, Florida. No remedy herein conferred upon any party is intended to be exclusive of any other remedy, and each and every such remedy shall be cumulative and shall be in addition to every other remedy given hereunder or now or hereafter existing at law or in equity or by statute or otherwise. No single or partial exercise by any party of any right, power, or remedy hereunder shall preclude any other or further exercise thereof.

17.05 Captions and Headings

The captions and headings in this Lease are included for convenience only and shall not be taken into consideration in any construction or interpretations of this Lease or any of its provisions.

17.06 No Representations - Entire Agreement

This Lease and the Existing Lease constitute all agreements, conditions and understanding between Lessor and Lessee concerning the Premises and the Existing Premises and there are no covenants, promises, representations, conditions or understandings by any party or the agent of any party hereto, either oral or written, between the parties or relied upon by the parties, other than as set forth herein and in the Existing Lease. No subsequent alteration, waiver, change or addition to this Lease shall be binding upon Lessor or Lessee unless reduced to writing and signed by them.

17.07 Radon

Radon is a naturally occurring radioactive gas that, when it has accumulated in a building in sufficient qualities, may present health risks to persons who are exposed to it over time. Levels of radon that exceed federal and state guidelines have been found in buildings in Florida. Additional information regarding radon and radon testing may be obtained from the public health unit.

17.08 Benefit and Binding Effect

This Lease shall be binding upon and inure to the benefit of the heirs, successors, legal representatives and assigns of the parties hereto.

17.09 Third Party Beneficiary

Nothing contained in this Lease shall be construed so as to confer upon any other party the rights of a third party beneficiary.

17.10 Relationship of Parties

It is understood and agreed that Lessor shall, in no event, be construed or held to be a joint venturer, partner, agent, representative, associate or other relationship of the Lessee for any purpose expressly or by implication in the conduct of Lessee's business, nor shall Lessor be liable for any debts incurred by Lessee in the conduct of Lessee's business; and, it is understood and agreed that the relationship is and at all times shall remain that as stated in Article IX herein. Accordingly, nothing herein shall be deemed to confer any rights of sovereign immunity to Lessee or its officers, directors, employees, agents, contractors, and representatives, and as such, all rights and interests of sovereign immunity shall be strictly limited to the Lessor under the laws and constitution of the State of Florida. Lessee shall not claim for itself, and it shall ensure that its officers, directors, employees, agents, contractors, and representatives do not assert as a defense or claim any rights of sovereign immunity in any legal or other proceeding.

17.11 Waiver

The failure of Lessor or Lessee to insist in any one or more instances upon strict performance of any one or more of the covenants, provisions and conditions of this Lease shall not be construed as a waiver of such covenants, provisions and conditions, but the same shall continue in full force and effect, and no waiver of Lessor or Lessee of any of the provisions hereof shall in any event be deemed to have been made unless the waiver is set forth in writing, signed by Lessor or Lessee, as applicable.

17.12 Conditions and Covenants

All of the provisions of this Lease shall be deemed covenants running with the land included in the Premises, and construed to be "conditions" as well as "covenants" as though the words specifically expressing or imparting covenants and conditions were used in each separate provision.

17.13 Preparation

This Lease shall not be construed more strongly against either party regardless of who was more responsible for its preparation.

17.14 Survival

Termination or expiration of this Lease shall not end any of the parties' rights and/or liabilities under this Lease that may apply and be enforced hereafter due to events and circumstances arising after the Effective Date of this Lease and at any time during the Term of this Lease.

17.15 Waiver of Jury Trial

WAIVER OF JURY TRIAL. TO ENCOURAGE PROMPT AND EQUITABLE RESOLUTION OF ANY LITIGATION, EACH PARTY HEREBY WAIVES ITS RIGHTS TO A TRIAL BY JURY IN ANY LITIGATION RELATED TO THIS LEASE.

17.16 Public Entity Crimes

Pursuant to section 287.133, Florida Statutes, the Lessee acknowledges and agrees that a person or affiliate who has been placed on the convicted vendor list following a conviction for a public entity crime may not submit a bid, proposal, or reply on a contract to provide any goods or services to a public entity; may not submit a bid, proposal, or reply on a contract with a public entity for the construction or repair of a public building or public work; may not submit bids, proposals, or replies on leases of real property to a public entity; may not be awarded or perform work as a contractor, supplier or sub-contractor under a contract with any public entity; and may not transact business with any public entity in excess of the threshold amount provided in Section 287.017, Florida Statues, for CATEGORY TWO for a period of 36 months following the date of being placed on the convicted vendor list. The Lessee will advise the Lessor immediately if it becomes aware of any violation of the statute.

17.17 Legal Effect

This Lease shall not become binding and effective until approved by the Lessor's City Council.

17.18 Notice of Complaints, Suits and Regulatory Violations

Each party will promptly notify the other of any complaint, claim, suit or cause of action threatened or commenced against it which arises out of or relates, in any manner, to this Lease. Each party agrees to cooperate with the other in any investigation either may conduct, the defense of any claim or suit in which either party is named, and shall do nothing to impair or invalidate any applicable insurance coverage.

17.19 Notice of Complaints, Suits and Regulatory

No member, official or employee of the Lessor or any other governing body (including, without limitation, the mayor or members of the City Council) shall be personally liable to Lessee, or any successor in interest, in the event of any default or breach by Lessor or for any amount or obligation which may become due to Lessee or successor under the terms of this Lease; and any and all such personal liability, either at common law or in equity or by constitution or statute, of, and any and all such rights and claims against, every such person, or under or by reason of the obligations, covenants or agreements contained in this Lease, or implied therefrom are expressly waived and released as a condition of, and as a consideration for, the execution of this Lease.

17.19 Broker

Lessor and Lessee represent and warrant that neither consulted nor negotiated with any broker or finder regarding the Premises.

17.20 Mold

Lessee is advised that mold and/or other microscopic organisms ("Mold Conditions") are prevalent in Florida's humid climate and locations especially in proximity to bodies of water. Mold Conditions may cause allergic reactions, respiratory reactions or other problems, particularly in persons with immune system problems, young children and elderly persons. Lessee acknowledges

that it is fully responsible to maintain the proper operation of the HVAC system in the Premises at all times to inhibit Mold Conditions. Lessee shall ensure property maintenance of the Premises to limit the accumulation of water and excessive moisture inside the Premises. Lessee shall notify Lessor immediately of any water intrusion conditions arising within the Premises. LESSEE ACKNOWLEDGES THE FOREGOING AND AGREES TO ACCEPT FULL RESPONSIBILITY FOR ANY AND ALL RISKS RELATED TO MOLD CONDITIONS IN THE PREMISES. LESSEE AGREES TO RELEASE, HOLD HARMLESS AND INDEMNIFY LESSOR, ITS OFFICIALS, OFFICERS, AGENTS, EMPLOYEES AND SUCESSORS FROM ANY AND ALL LIABILITY OR DAMAGES INCLUDING ATTORNEY'S FEES, WHETHER FINANCIAL OR OTHERWISE ARISING FROM OR RELATED TO MOLD CONDITIONS IN THE PREMISES.

REMAINDER OF THIS PAGE LEFT BLANK INTENTIONALLY
SIGNATURE PAGES FOLLOW

IN WITNESS WHEREOF, the parties hereto have duly executed this Lease Agreement effective as of the date set forth above.

FOR CITY OF RIVIERA BEACH AS LESSOR:

_____
Witness

_____
Print/Type Witness Name

By: _____
Thomas A. Masters
Mayor

_____
Witness

_____
Print/Type Witness Name

ATTEST:

By:_____
Claudene L. Anthony, CMC
City Clerk

Approved as to legal
sufficiency:

_____
City Attorney's Office

_____
Date

STATE OF FLORIDA
COUNTY OF PALM BEACH

The foregoing instrument was acknowledged before me this _____ day of _____ 2016, by Thomas A. Masters, who is personally known to me or who produced _____ as identification.

_____
Notary Public, State of Florida

FOR RIVIERA BEACH MARITIME ACADEMY, CORP., AS LESSEE:

_____
Witness

_____
Print/Type Witness Name

By: _____
George Carter
President

{Corporate Seal}

_____
Witness

_____
Print/Type Witness Name

STATE OF FLORIDA
COUNTY OF PALM BEACH

The foregoing instrument was acknowledged before me this _____ day of _____ 2016, by George Carter, as President of RIVIERA BEACH MARITIME ACADEMY, CORP, who is personally known to me or who produced _____ as identification.

_____
Notary Public, State of Florida

EXHIBIT "A"

Premise Legal Description and Survey

EXHIBIT "B"

SITE PLAN

RESOLUTION NO. 47-06

A RESOLUTION OF THE CITY COUNCIL OF THE CITY OF RIVIERA BEACH, PALM BEACH COUNTY, FLORIDA, AUTHORIZING THE MAYOR AND CITY CLERK TO EXECUTE A LEASE AGREEMENT WITH THE RIVIERA BEACH MARITIME ACADEMY CORP.; AND PROVIDING AN EFFECTIVE DATE.

WHEREAS, the Community Redevelopment Agency (CRA) has selected Viking Inlet Harbor Properties, LLC, as the master developer for the City's redevelopment area; and

WHEREAS, Viking Yacht Company, the principal partner of Viking Inlet Harbor Properties, LLC has committed to the CRA that it will establish a Maritime charter school in the downtown redevelopment area to be operated as the Riviera Beach Maritime Academy Corp.; and

WHEREAS, the Riviera Beach Maritime Academy Corp., wishes to enter into a lease with the City for the operation of a charter school on City owned land near the former Riviera Beach Elementary School site so that the charter school can open in August 2006; and

WHEREAS, the City is amenable to entering into a short term lease (April 6, 2006-August 5, 2008) with the Academy to facilitate the opening of the school; and

WHEREAS, this site shall be a temporary location for the charter school pending the acquisition and construction of a permanent school in Riviera Beach.

NOW, THEREFORE BE IT RESOLVED, BY THE CITY COUNCIL OF THE CITY OF RIVIERA BEACH, PALM BEACH COUNTY, FLORIDA, as follows:

SECTION 1. That the City Council authorizes the Mayor and City Clerk to execute a lease agreement with the Riviera Beach Maritime Academy Corporation, a copy of which is attached hereto.

SECTION 2. This resolution shall take effect immediately upon its passage and approval by the City Council.

PASSED and APPROVED this ____day of April, 2006.

APPROVED:

MICHAEL D. BROWN
MAYOR

ATTEST:

CARRIE E. WARD,
MASTER MUNICIPAL CLERK
CITY CLERK

VANESSA LEE
COUNCILPERSON

NORMA DUNCOMBE
COUNCILPERSON

ELIZABETH "LIZ" WADE
COUNCILPERSON

JAMES "JIM" JACKSON
COUNCILPERSON

ANN ILES
COUNCILPERSON

MOTIONED BY: E. Wade

SECONDED BY: N. Duncombe

V. LEE: aye

E. WADE: aye

A. ILES: aye

N. DUNCOMBE aye

J. JACKSON aye

REVIEWED AS TO LEGAL SUFFICIENCY

PAMALA HANNA RYAN, CITY ATTORNEY

DATE: 4/4/06

LEASE

This **LEASE** entered into this 5 day of April, 2006, by and between **CITY OF RIVIERA BEACH, FLORIDA,** a municipal corporation, hereinafter referred to as "Landlord," whose address is 600 West Blue Heron Boulevard, Riviera Beach, Florida, 33404, and **Riviera Beach Maritime Academy Corp.,** a Florida not-for-profit corporation authorized to do business in the State of Florida, hereinafter referred to as "Tenant," whose principal office is located at 1550 Avenue "C" East, Riviera Beach, FL 33404.

WITNESSETH:

WHEREAS, the City is the owner of certain real property located approximately a quarter mile west of US Highway One, between 13th Street, 11th Street, and east of Park Drive, which includes property immediately to the south of and located on the formerly known as Riviera Beach Elementary School parcel. The property, hereinafter referred to as "Premises" is more particularly described as:

Property ID No. : 56434233060300010

Riviera Parcel Not included on Replat of Riviera in PB24 P41 Bounded on North By South Line of 12th Street, on West by East line of Park Drive, on East by West Line of Avenue F, and on South by North Line of 11th Street.

WHEREAS, the Tenant desires to lease a portion of such Premises, as more fully depicted in **Exhibit "A"** attached hereto and incorporated herein, for the purpose of locating and maintaining portable units for the operation of a Charter School as provided for by Florida Statute and approved by the School District of Palm Beach County, Florida. Said Charter School shall be a maritime academy organized and designed to educate high school students in grades 9 through 12 whose principal operation will be to provide an educational curriculum that incorporates both high academic standards and hands-on performance skills that are based on maritime industry standards.

NOW, THEREFORE, in consideration of the covenants herein contained, on the part of the Tenant to be kept and performed, the Landlord does hereby lease the Premises to the Tenant.

To Have and to Hold the same under the following terms and conditions:

1. RENT

Rent shall be the sum of Five Hundred and 00/100 Dollars ($500.00) per month for the term of this Lease. The rent is payable on the 1st day of the month. For the first month, rent shall be paid upon execution of the agreement. All rent payments shall be due and payable at Landlord's address, attention Finance Department, in advance without demand together with other monthly payments as set forth herein, together with applicable Florida sales tax unless an exemption certificate is provided. Mailing the rent does not constitute payment. It must be received at the designated address to be considered paid. In the event Landlord has not received such rent and other payments due under the terms of this Lease,

Landlord may terminate this lease. In the event Landlord opts, at its sole discretion, to continue under the terms of this Agreement, in addition to any other remedy provided for herein, Tenant shall also pay a late fee equal to 5% of the payment that is past due. If Tenant's check is returned unpaid by the bank, Tenant shall pay Landlord an additional charge of $28.00 to cover the expense of process and thereafter, Landlord shall have the right to require all payments to be made in the form of cash, cashier's check, or money order.

(b) All taxes (unless exempt under Tenant's 501(c)(3) status), charges, costs, assessments, insurance and expenses that Tenant assumes or agrees to pay hereunder, together with all interest and late charges that may accrue thereon in the event of the failure of Tenant to pay those items and all other damages, costs, expenses and sums that Landlord may suffer or incur, or that may become due by reason of any default of Tenant or failure by Tenant to comply with the terms and conditions of this Lease, shall be deemed to be additional rent and in the event of non-payment, Landlord shall have all rights and remedies as herein provided for failure to pay rent.

2. LEASE TERM

The Term of this Lease shall commence at midnight of the day previous to the first day of the lease term which shall be on the 6th day of April, 2006, and ending at midnight on the last day of the lease term, which shall be on the 5th day of August, 2008.

3. USE

(a) Tenant, its successors and assigns, shall use the Premises exclusively for locating and maintaining portable units for the purpose of operating a Charter School as provided for by Florida Statute and approved by the School District of Palm Beach County, Florida. Said Charter School shall be a maritime academy organized and designed to educate high school students in grades 9 through 12 whose principal purpose will be to provide an educational curriculum that incorporates both high academic standards as well as hands-on performance skills that are based on maritime industry standards. (Hereinafter referred to as "Program".)

(b) The Premises may not be used for illegal, immoral or improper purposes.

(c) Tenant's failure to comply with any of the requirements set forth in this Section shall be deemed a material breach of this Lease and grounds for termination of same.

4. TENANT'S OPERATIONS

Tenant shall employ or retain a suitable and sufficient staff to operate Tenant's Program. All persons employed by Tenant shall be employees of Tenant, and in no event shall the Landlord be deemed to be an employer of any persons working for Tenant. The Tenant agrees that each person employed or associated with the Tenant shall be required to maintain a neat, clean appearance and conduct himself/herself in a professional manner; and, in that regard, the Tenant will cooperate with the Landlord (including giving due

consideration to any complaints registered with the Landlord with respect to such person or persons) to assure that such required appearance and conduct is maintained at all times.

5. PREPARATION OF PREMISES

(a) Prior to or contemporaneous with the approval of this Lease, Tenant shall provide to Landlord, a site plan which shall include a landscaping and parking plan. Said site plan shall be attached hereto as **Exhibit "B"**

(b) Prior to occupancy, Tenant shall obtain any and all licenses and permits necessary for operation of the Program. Further, Tenant shall be responsible for locating, stabilizing and maintaining portable units owned and /or leased by Tenant.

(c) Post occupancy, Tenant shall be responsible for removing the portable units, cleaning and vacating Premises.

6. IMPROVEMENTS

(a) Tenant shall take the Premises in its present "as is" condition. In the event that Tenant desires to make any improvements, prior to making such improvements, Tenant shall submit to Landlord in writing a detailed description of the proposed improvements. Any such proposed improvements shall be subject to final approval by Landlord. Tenant agrees all improvements made by Tenant shall remain upon the Premises at the expiration or earlier termination of the Lease and shall become the property of the Landlord.

(b) Tenant shall be responsible, at Tenants sole expense for, clearing the necessary portions of the Property, and demolishing the vacant structures located on the Property and as further described in **Exhibit "C"**. Tenant may at its expense prior to occupancy conduct a "phase I" environmental investigation of the property and if the results are unsatisfactory, Tenant may by written notice to Landlord cancel this Lease.

(c) Tenant shall have the right to repair, replace or reconfigure, at Tenant's sole expense, the existing fence surrounding the Property.

7. INSURANCE

(a) Prior to execution of this Lease, Tenant shall provide certificates evidencing insurance coverages as required hereunder. All insurance policies shall be issued by companies authorized to do business under the laws of the State of Florida. The certificates shall clearly indicate that the Tenant has obtained insurance of the type, amount, and classification as required for strict compliance with this Section and that no material change or cancellation of the insurance shall be effective without thirty (30) days prior written notice to the Landlord. Compliance with the foregoing requirements shall not relieve the Tenant of its liability and obligations under this Lease. All insurance, other than Professional Liability and Workers' Compensation, to be maintained by the Tenant shall specifically include the Landlord as an "Additional Insured."

(b) The Tenant shall maintain, during the life of this Lease, commercial general liability, including contractual liability insurance in the amount of not less than One Million Dollars ($1,000,000.00) per occurrence to protect the Tenant from claims for damages for bodily and personal injury, including wrongful death, as well as from claims of property damages which may arise from any operations under this Lease, whether such operations be by the Tenant or by anyone directly employed by or contracting with the Tenant.

(c) The Tenant shall, if Tenant owns or leases any automobiles, maintain, during the life of this Agreement, comprehensive automobile liability insurance in the minimum amount of $100,000/$300,000 combined single limit for bodily injury and property damages liability to protect the Tenant from claims for damages for bodily and personal injury, including death, as well as from claims for property damage, which may arise from the ownership, use, or maintenance of owned and non-owed automobiles, including rented automobiles whether such operations be by the Tenant or by anyone directly or indirectly employed or retained by the Tenant.

(d) The Tenant shall maintain, during the life of this Lease, Protection and Indemnity Coverage, with a limit of not less than $200,000.00 per person, per occurrence.

(e) The Tenant shall maintain, during the life of this Lease, adequate Workers' Compensation Insurance and Employer's Liability Insurance in at least such amounts as are required by law for all of its employees per Florida Statute 440.02.

8. PUBLIC UTILITIES

Tenant shall have installed and pay for all utilities, used or consumed in or upon the Premises, which shall include, but not be limited to, gas, electric, water, sewer, telephones, and garbage and trash pickup unless otherwise stipulated herein and shall cause all accounts to be placed in Tenant's name no later than at the time the Tenant takes possession of the Premises. Tenant agrees to bear the cost of separating its water, sewer and other utility lines from the building occupied by the Boys and Girls Club.

9. TAXES AND ASSESSMENTS

(a) Tenant shall pay, as additional rent, during the term of the Lease all other assessments levied on the Premises, if any. Tenant shall be exempt from paying any real estate taxes so long as Tenant maintains its 501(c)(3) status and is excepted by the property appraiser.

(b) In the event that any governmental authority having jurisdiction shall levy any assessment against the Premises, of which the Leased Premises is a part, for public betterment or improvement, Tenant shall also pay to Landlord as additional rent, Tenant's proportionate share of said assessments which proportionate share shall be calculated by multiplying the total assessment by the percentage for which the Tenant's Premises is a portion of the whole premises assessed. Landlord shall take the benefit of the provisions of

any statute or ordinance permitting any such assessment for public betterment or improvement to be paid over a period of time. The obligation of Tenant to pay any assessment for improvements shall only be for installments during the period of the tenancy.

10. REPAIRS: MAINTENANCE OF PREMISES

Tenant shall keep the Premises, which includes, but is not limited to, the grounds, the portable units and any and all electrical, fire alarms and smoke detectors, plumbing, heating, air-conditioning vents and filters, and other mechanical installations therein, all doors and all plate glass doors and windows, in good order and clean and attractive appearance, making all repairs, alterations, replacements and modifications at its own expense.

The Tenant must landscape the area in accordance with the landscaping code, and Tenant shall be responsible for all future maintenance and upkeep of such landscaping during this Lease.

11. ALTERATIONS

(a) Except as required by this Lease, Tenant shall not make any alterations, improvements or additions to the Premises during the term of the Lease or any extension thereof without first obtaining the written consent of Landlord. Tenant shall not cut or drill into, or secure any fixture, apparatus or equipment of any kind to any part of the Premises without first obtaining written consent of Landlord. All such alterations, improvements and additions made by Tenant shall remain upon the Premises at the expiration or earlier termination of the Lease and shall become the property of the Landlord (except personal property, including but not limited to Tenant's portable units or any fixtures purchased with public funds), unless Landlord shall, prior to such termination, have given written notice to Tenant to remove same, in which event Tenant shall remove such alterations, improvements and additions and restore the Premises to the same good order and condition in which they were at the commencement of the Lease. Should Tenant fail to do so, Landlord may do so, collecting the cost and expense thereof from Tenant as additional rent.

(b) Notwithstanding anything contrary to the foregoing, Tenant shall be responsible, at Tenant's sole expense, for the demolition and clearing of the abandoned structures located on the Property as further described in **Exhibit "C."**

12. COVENANTS OF TENANT

Tenant covenants that it shall:

(a) Comply with the terms of any State or Federal Statute or local ordinance or regulation applicable to Tenant or its use of the Premises, and save the Landlord harmless from penalties, fines, costs, expenses, or damages resulting from its failure to do so; and

(b) Comply with the terms and conditions set forth herein relating to the use, operation and maintenance of the Premises; and

(c) Give to Landlord prompt written notice of any accident, fire, or damage occurring on or to the Premises; and

(d) Conduct its business on the Premises in a dignified and professional manner and keep the Premises in first-class condition in accordance with high standards of operation; and

(e) Comply with all rules and regulations of the Landlord in effect at the time of the execution of the Lease as same may be amended or promulgated from time to time by Landlord, which Landlord shall deem necessary in connection with the Premises, of which the Premises are a part, including the installation of such fire extinguishers and other safety equipment as the Landlord may require; and comply with the recommendations of the Landlord's insurance carriers and their rate-making bodies; and

(f) Tenant shall have no power or authority to create any lien or permit any lien to attach to the Premises, reversion or other estate of Landlord in the Premises in general or other improvements thereof, and all supplies, contractors, artisans, mechanics, and laborers and other persons contracting with Tenant with respect to the Premises or any part thereof, are hereby charged with notice that the interest of Landlord shall not be subject to liens for improvements made by or on behalf of Tenant, and therefore, Tenant agrees to do all things necessary to prevent the filing of any mechanic's or other liens against the Premises or any part thereof by reasons of work, labor services, or materials supplied or claimed to have been supplied to Tenant, or anyone holding the Premises, or any part thereof, through or under Tenant. If any such lien shall at any time be filed against the Premises, Tenant shall cause the same to be discharged of record within ten (10) days after the date of filing. If Tenant shall fail to discharge such lien within said period, then in addition to any other right or remedy of Landlord resulting from Tenant's default, Landlord may, but shall not be obligated to, discharge the same by paying the amount claimed to be due or by procuring the discharge by giving security or in such manner as is, or may be, prescribed by law; and

(g) Repay Landlord, on demand, all sums disbursed or deposited by Landlord pursuant to the terms and conditions of this Agreement, including Landlord's costs, expenses and reasonable attorney's fees and such fees for appeals incurred by Landlord in connection therewith; and

(h) Tenant covenants that it shall not do any of the following without the prior consent in writing of Landlord:

(1) Use or operate any machinery or emit any noises or noxious odors from the Premises that is harmful to the Premises or unreasonably disturbing to other tenants near the Premises.

(2) Do or suffer to be done, anything objectionable to the fire insurance companies whereby the fire insurance or any other insurance now in force or hereafter to be placed on the Premises or any part thereof, or on the building of which the Premises may be a part, shall become void or suspended, or be rated as a more hazardous risk than at the date when Tenant receives possession hereunder. In case of a breach of this covenant, in addition to all other remedies of Landlord hereunder, Tenant shall pay to Landlord as additional rent any increases of premiums on insurance carried by Landlord on Landlord's Premises, or any part thereof, or on the building of which the Premises may be a part, caused in any way by the occupancy of Tenant. Nothing herein contained shall prevent Tenant from utilizing the premises for the Uses described in Paragraph 3 herein.

(3) Commit or suffer to be committed by any person, any waste upon the Premises or any nuisance or other act which may disturb the quiet enjoyment of any occupant of Landlord's Premises.

(4) Tenant shall neither use nor occupy the Premises or any part thereof for any unlawful, disreputable, or ultra-hazardous purpose nor operate or conduct its business in a manner constituting a nuisance of any kind in the judgment of Landlord. Tenant shall immediately, on discovery or notice of any unlawful or ultra-hazardous use, take action to halt such activity.

13. RIGHTS OF LANDLORD

Landlord reserves in addition to any rights reserved herein, the following rights with respect to the Premises:

(a) At all reasonable times, by itself or its duly authorized agents, to go upon and inspect the Premises, and at its option to make repairs, alterations, and additions thereto. If Tenant shall not be personally present, to open and permit an entry by Landlord into the Premises, and if an entry therein shall be necessary in the case of an emergency, it being understood that hurricanes or severe storm warnings shall constitute such an emergency, Landlord or Landlord's agents may make forcible entry without rendering Landlord or such agent liable therefore and without in any manner affecting the obligations and covenants of this Lease. Tenant hereby grants Landlord the necessary licenses to carry out the terms of this provision.

(b) The exercise of any right reserved to Landlord in this provision or otherwise, shall not be deemed an eviction or disturbance of Tenant's use and possession of the Premises and shall not render Landlord liable in any manner to Tenant or to any other person, provided Tenant's use shall not be unreasonably impaired.

14. INDEMNIFICATION

(a) Tenant shall indemnify Landlord and its agents and save it harmless from and against any and all claims, actions, damages, liability, and expense, including attorney's fees,

in connection with loss of life, personal injury, or damage to property occurring in or arising out of the Premises, adjacent sidewalks, or any other areas, occasioned wholly or in part by any act or cause whatsoever, any occurrence, negligence, misconduct or omission of Tenant, its agents, subtenants, licenses, contractors, employees, students, parents or other invitees.

In case Landlord shall be made a party to any litigation commenced by or against Tenant, its agents, subtenants, licenses, contractors, or employees, then Tenant shall protect and hold Landlord harmless and shall pay all costs, expenses and reasonable attorney's fees incurred or paid by Landlord in connection with such litigation. Nothing contained in this Provision shall be construed or interpreted as consent by the Landlord to be sued, nor as a waiver of sovereign immunity beyond the waiver provided in Section 768.28, Florida Statutes.

(b) Tenant shall pay all claims, losses, liens, fines, settlements or judgments of any nature whatsoever in connection with the foregoing indemnifications including, but not limited to, reasonable attorney's fees, and court and/or arbitration costs. These indemnifications shall survive the term of this Lease or any renewal thereof.

15. TRADE FIXTURES

All trade fixtures including, but not limited to, the portable units installed by Tenant on the Premises shall remain the property of Tenant (except any fixtures purchased with public funds) and shall be removed at the expiration or earlier termination of the Lease or any renewal or extension thereof, and in the event of such removal, Tenant shall have repaired the damage caused by such removal, and promptly restored the Premises to its original order and condition within thirty (30) days of removal. Any such trade fixture not removed at or prior to such termination shall become the property of the Landlord unless said trade fixtures are purchased with public funds, in such case those fixtures shall become property of the School Board of Palm Beach County. If the Tenant fails to timely remove all fixtures, the Landlord may do so and send an invoice to the Tenant which must be paid within thirty (30) days of the date of the receipt.

16. ASSIGNING, MORTGAGING, SUBLETTING

(a) Tenant shall not directly or indirectly assign, create a security interest in, pledge, mortgage, or encumber any legal or equitable interest in the Lease, in whole or in part, or sublet the whole or any part of the Premises, or permit the use of the whole or any part hereof by a license or concessionaire or any person without first obtaining the written consent of Landlord, which the parties agree may be withheld for any reason whatsoever in Landlord's sole and absolute discretion. In the event that such assignment, subletting, licensing, or granting of a concession is consented to, Tenant shall nevertheless remain liable for the performance of all the provisions of the Lease.

(b) Any approved assignment or sub-lease of the Premises, shall forever terminate all rights of Tenant to possession of the Premises, notwithstanding any provision in any such assignment or sublease to the contrary, and notwithstanding Landlord's consent to such assignment or sublease. Thereafter, Landlord may exercise against any subtenant or assignee

all rights and remedies herein provided upon default, without notice to Tenant, and Tenant shall have no right to re-enter the Premises upon default of the assignee or sublessee, but Tenant shall remain liable, jointly and severally, with any assignee or subtenant for the performance of all of the covenants and conditions of the Lease, including, but not limited to, the payment to Landlord of all payments due or to become due to Landlord hereunder.

17. PERFORMANCE OF TENANT'S COVENANTS

Tenant shall perform all of the covenants and conditions on its part to be performed, and it will immediately, upon receipt of written notice, where notice of non-performance is required by the Lease, comply with the requirements of such notice, and further, if Tenant shall violate any covenant or condition herein, whether or not notice is required, Landlord may, at its option, do or cause to be done any or all of the things required by the Lease. In so doing, Landlord shall have the right to cause its agents, employees, and contractors to enter upon the Premises, and in such event shall have no liability to Tenant for any loss or damages resulting in any way from such action. Tenant hereby grants Landlord all necessary licenses required to carry out the terms of this provision. Notwithstanding Section 15 above, Tenant shall pay to Landlord, within ten (10) days of demand, any monies paid or expenses incurred by Landlord in taking such actions, including attorney's fees and such sums shall be collectible from Tenant as additional rent hereunder.

18. SURRENDER AND HOLDING OVER

Tenant, upon expiration or termination of the Lease, either by lapse of time or otherwise, shall peaceably surrender to Landlord the Premises and in good repair as required in the Lease. In the event that Tenant shall fail to surrender the Premises upon demand, Landlord, in addition to all other remedies available to it hereunder, shall have the right to immediately file for a writ of possession with the Court with no prior notice being given to Tenant.

19. EVENTS OF DEFAULT

The occurrence of any of the following shall, in addition to any other events of default or breach as provided throughout the Lease, constitute an event of default hereunder:

(a) The filing of a petition by or against Tenant for relief under the Bankruptcy Code, or for its reorganization or for the appointment of a receiver or trustee of Tenant or Tenant's Premise; or an assignment by Tenant for the benefit of creditors; or the taking possession of the Premise of Tenant by any governmental officer or agency pursuant to statutory authority for the dissolution or liquidation of Tenant; or if a temporary or permanent receiver or trustee shall be appointed for Tenant or for Tenant's Premise and such temporary or permanent receiver or Trustee shall not be discharged within thirty (30) days from the date of appointment; or any other execution, levy, attachment or other process of law upon Tenant's interest in the leasehold estate or any part thereof; or if any judgment entered against Tenant has not been satisfied or bonded within thirty (30) days of the date of the judgment.

(b) Failure of Tenant to pay when due without notice any installment of rent hereunder, or any other sum herein required to be paid by Tenant if such payment remains unpaid for more than fifteen (15) days after written notice of such failure to pay from Landlord.

(c) Vacation or abandonment of the Premises or permitting the same to be empty and unoccupied, or the failure to open and actively conduct its business for a period of thirty (30) consecutive calendar days, unless required by the curriculum calendar as set forth by either the School District of Palm Beach County or the state regulatory agency governing charter schools, without written consent of Landlord.

(d) Tenant's failure to perform or observe any other provision of the Lease, after written notice and demand, provided that, if such failure is of such a character as not to permit immediate compliance in the sole opinion of Landlord, then Tenant's failure to proceed diligently and immediately upon receipt of notice to commence the cure of such failure, and thereafter to commence such cure with all reasonable dispatch within five (5) days after written notice from Landlord, and to complete or comply with the provision within a reasonable period as established by Landlord.

(e) Notwithstanding any provision in this Lease to the contrary, any Tenant default or breach hereunder is subject to notice and cure provisions set forth herein and other matters which are not within Tenant's control.

20. LANDLORD'S REMEDIES UPON DEFAULT BY TENANT

(a) Upon the occurrence of any event or events of default or other breach of this Lease by Tenant, and after notice to Tenant and expiration of cure period, Landlord shall have the option to pursue any one or more of the following remedies: (i) Landlord shall have the right, at its election, to cancel and terminate this Lease and dispossess Tenant; and (ii) Landlord may enter upon the Premises and do whatever Tenant is obligated to do under this Lease (and Tenant agrees to reimburse Landlord on demand for any expenses which Landlord may incur in effecting compliance with Tenant's obligations under this Lease and Tenant further agrees that Landlord shall not be liable for any damages resulting to the Tenant from such action).

(b) The various rights and remedies, powers, options and elections of Landlord reserved, expressed, or contained in the Lease are distinct, separate and cumulative, and not one of them shall be deemed to be exclusive of the other rights, remedies, powers or options provided herein or are now or may hereafter be conferred upon Landlord by statute or by law or equity.

(c) No receipt of money by Landlord from Tenant after notice and expiration of cure period for default or cancellation of this Lease shall: (i) reinstate, continue, or extend the term or affect any notice given to Tenant, (ii) operate as a waiver of the right of Landlord to enforce the payment of rent and additional rent then due or to become due, or (iii) operate as a waiver of the right of Landlord to recover possession of the Premises by suit, action,

proceeding, or other remedy. After: (i) service of notice of termination and forfeiture as herein provided and the expiration of the time specified therein, (ii) the commencement of any suit, action, proceeding, or other remedy, or (iii) final order or judgment for possession of the Premises, Landlord may demand, receive and collect any monies due, without in any manner affecting such notice, order or judgment. Any and all such monies so collected shall be deemed to be payment on account of the use and occupation of the Premises or at the election of Landlord, on account of the liability of Tenant hereunder.

(d) Any sums which may be expended by Landlord in accordance with the terms of this Lease that are paid on behalf of Tenant or due to Tenant's default hereunder shall bear interest at the highest rate allowed under Florida law and Tenant shall be liable for such sums plus such interest as additional rent hereunder.

21. AUTHORITY

(a) All persons executing the Lease on behalf of a corporate tenant (or other entity) personally represent and warrant that they have been authorized to execute the Lease by such tenant. Evidence of such authority shall be provided upon request.

(b) Tenant hereby represents and warrants that it has and will continue to maintain all licenses and approvals required to conduct its business, and that it will at all times conduct its business activities in a reputable manner. Proof of such licenses and approvals shall be submitted to the Landlord upon request.

(c) Tenant shall be solely responsible for obtaining and complying with all necessary permits, approvals and authorizations required for any work done pursuant to this Lease from any federal, state, regional, county, or city agency.

22. LIABILITY OF LANDLORD

(a) Tenant shall look solely to Landlord's interest in the Premises and shall look only to Landlord's personal property used in connection with the Premises for the satisfaction of any judgment or decree requiring the payment of money by Landlord, based upon any default hereunder, and no other property or asset of Landlord shall be subject to levy, execution, or enforcement procedure for the satisfaction of such judgment or decree.

(b) The provisions herein permitting Landlord to enter and inspect the Premises are made to ensure that Tenant is in compliance with the terms and conditions hereof and to make repairs that Tenant has failed to make. Landlord shall not be liable to Tenant for any entry on the Premises for inspection purposes. Landlord's right to inspect the Premises shall be on reasonable notice to the Tenant except in emergency circumstances.

23. LEGAL EXPENSES

Should suit be brought for the recovery of possession of the Premises, or for rent or any other sum due Landlord under the Lease, or because of the breach of any of Tenant's

covenants under the Lease, the prevailing party shall be entitled to recover its reasonable attorney's fees and costs, including such fees and costs on appeal.

24. EASEMENTS, AGREEMENTS, OR ENCUMBRANCES

The parties shall be bound by all existing easements, agreements, and encumbrances of record relating to the Premises including, but not limited to any deed or plat restrictions.

25. TIME OF THE ESSENCE

Time is of the essence in all provisions of this Lease.

26. QUIET ENJOYMENT

Landlord warrants that Tenant shall be granted peaceable and quiet enjoyment of the Premises free from any eviction or interference by Landlord if Tenant pays the rent and other charges provided herein and otherwise fully performs and complies with the terms, conditions and provisions of this Lease.

27. ENTIRETY OF CONTRACTUAL AGREEMENT

The Lease and all Amendments and Exhibits set forth all of the covenants, promises, agreements, conditions, and understandings between Landlord and Tenant concerning the Premises and there are no covenants, promises, conditions, or understandings either oral or written between them other than herein set forth. Except as otherwise provided, no subsequent alteration, change or addition to the Lease shall be binding upon the Landlord or Tenant unless reduced to writing and signed by both parties. Except at Landlord's option, no part of this Lease may be recorded in any public records of any municipality or county records.

28. VENUE

This Agreement and any dispute, disagreement, or issue of construction or interpretation arising hereunder whether relating to its execution, its validity, the obligations provided therein, performance or breach shall be governed and interpreted according to laws of the State of Florida. Any and all legal action necessary to enforce the contract will be held in Palm Beach County.

29. INVALID PROVISIONS

If any provision of the Lease shall be determined to be void by any court of competent jurisdiction or any law enacted subsequent to the date hereof, then such determination shall not affect any other provision hereof, all of which other provisions shall remain in full force and effect.

30. TERMINOLOGY AND CAPTIONS

All pronouns, singular, plural, masculine, feminine or neuter, shall mean and include the person, entity, firm or corporation to which they relate as the context may require. Wherever the context may require, the singular shall mean and include the plural and the plural shall mean and include the singular. The term "Agreement" as used herein, as well as the terms "herein", "hereof", "hereunder", "hereinafter" and the like mean this Lease Agreement in its entirety and all exhibits, amendments and addenda attached hereto and made a part hereof. The captions and paragraph headings are for reference and convenience only and do not enter into or become a part of the context of this Lease, nor shall such headings affect the meaning or interpretation of this Lease.

31. SUCCESSORS AND ASSIGNS

All rights, obligations and liabilities given to, or imposed upon, the parties hereto shall extend to and bind the respective heirs, executors, administrators, successors, sublessees, licensees, concessionaires and assigns of such parties hereof. No rights, however, shall inure to the benefit of any assignee of Tenant unless the assignment to such assignee has been approved by Landlord in writing as hereinabove set forth. Nothing contained in the Lease shall in any manner restrict Landlord's right to assign or encumber the Lease and, in the event Landlord sells its interest in the Premise and the purchaser assumed Landlord's obligations and covenants, Landlord shall thereupon be relieved of all obligations hereunder.

32. NOTICES

All notices required in this Lease shall be sent by certified mail, return receipt requested, and if sent to the Landlord shall be mailed to:

City of Riviera Beach
Attn: William E. Wilkins, City Manager
600 West Blue Heron Blvd
Rivera Beach, Fl 33404

with a copy to Pamala H. Ryan, City Attorney at the same address, and if sent to the Tenant shall be mailed to:

Riviera Beach Maritime Academy, Corp.
Attn: Gerard D. Straub, Sr., Chairman and President
c/o Viking Yacht Service Center
1550 Avenue "C" East
Riviera Beach, FL 33404

With a copy to:
Isaacs Williams, P.A.
Attn: Ethel Isaacs Williams, Esq.
2655 North Ocean Drive, Suite 502
Riviera Beach, FL 33404

33. PREPARATION

This Lease shall not be construed more strongly against either party regardless of who was more responsible for its preparation.

34. MATERIALITY

All provisions of the Lease shall be deemed material, in the event Tenant fails to comply with any of the provisions contained in this Lease or exhibits, amendments and addenda attached hereto, said failure shall be deemed a material breach of this Lease and Landlord may at its option and without notice terminate this Lease.

THE REMAINDER OF PAGE INTENTIONALLY LEFT BLANK

LEASE WITH THE CITY OF RIVIERA BEACH

IN WITNESS WHEREOF, the Parties unto this Lease have set their hands and seals on the day and date first written above.

CITY OF RIVIERA BEACH

BY: _____
MICHAEL D. BROWN
MAYOR

ATTEST:

BY: _____
CARRIE E. WARD, MMC
CITY CLERK

APPROVED AS TO FORM AND
LEGAL SUFFICIENCY

BY: _____
PAMALA H. RYAN
CITY ATTORNEY

DATE: 4/4/06

TENANT

BY: _____
GERARD D. STRAUB, SR.
CHAIRMAN & PRESIDENT

RESOLUTION NO. 143-08

A RESOLUTION OF THE CITY COUNCIL OF THE CITY OF RIVIERA BEACH, PALM BEACH COUNTY, FLORIDA, APPROVING A NEW ONE YEAR LEASE WITH THE RIVIERA BEACH MARITIME ACADEMY CORPORATION AT $500 PER MONTH; AUTHORIZING THE MAYOR AND CITY CLERK TO EXECUTE THE LEASE; AND PROVIDING AN EFFECTIVE DATE.

WHEREAS, the Riviera Beach Maritime Academy Corporation (hereinafter "Maritime Academy") is a not-for-profit entity providing a charter school designed to educate and provide training on the maritime industry to high school students in grades nine through twelve; and

WHEREAS, the City entered into a 28 month lease agreement with the Maritime Academy on April 2006, enabling the Maritime Academy to lease space between 11th and 13th Street, on property formerly known as the Riviera Beach Elementary School parcel; and

WHEREAS, the Maritime Academy improved the site with temporary portables and landscaping and has operated a successful charter school at the site; and

WHEREAS, the Maritime Academy has been operating in a month to month fashion with the lease agreement since the lease expired in August 2008, and is requesting that the City grant an additional one year lease; and

WHEREAS, the City Council has determined that it is in the best interest of the city to enter into a new one year lease with the Maritime Academy.

NOW, THEREFORE, BE IT RESOLVED BY THE CITY COUNCIL OF THE CITY OF RIVIERA BEACH, PALM BEACH COUNTY, FLORIDA, as follows:

SECTION 1. That a new one year lease with the Maritime Academy at $500 per month is hereby approved.

SECTION 2. That the Mayor and City Clerk are authorized to execute the lease on behalf of the City, said Lease is attached hereto.

SECTION 3. That this resolution shall take effect immediately upon its passage and approval by the City Council.

PASSED and APPROVED this 5th day of November ,2008.

APPROVED:

THOMAS A. MASTERS
MAYOR

CEDRICK A. THOMAS
CHAIRPERSON

CARRIE E. WARD
MASTER MUNICIPAL CLERK
CITY CLERK

DAWN S. PARDO
CHAIR PRO TEM

LYNNE L. HUBBARD
COUNCILPERSON

JUDY L. DAVIS
COUNCILPERSON

SHELBY L. LOWE
COUNCILPERSON

MOTIONED BY: D. PARDO

SECONDED BY: L. HUBBARD

C. THOMAS	AYE
D. PARDO	AYE
L. HUBBARD	AYE
J. DAVIS	AYE
S. LOWE	AYE

REVIEWED AS TO LEGAL SUFFICIENCY

PAMALA HANNA RYAN, CITY ATTORNEY

DATE: 10/28/08

10/2S/0S:PHR:syj

LEASE

This **LEASE** entered into this 5th day of November, 2008, by and between **CITY OF RIVIERA BEACH, FLORIDA,** a municipal corporation, hereinafter referred to as "Landlord", whose address is 600 West Blue Heron Boulevard, Riviera Beach, Florida, 33404, and **RIVIERA BEACH MARITIME ACADEMY CORP.,** a Florida not-for-profit corporation authorized to do business in the State of Florida, hereinafter referred to as "Tenant" whose principal office is located at 1550 Avenue "C" East, Riviera Beach, FL 33404.

WITNESSETH:

WHEREAS, the City is the owner of certain real property located approximately a quarter mile west of US Highway One, between 13th Street, 11th Street, and east of Park Drive, which includes property immediately to the south of and located on the formerly known as Riviera Beach Elementary School parcel. The property, hereinafter referred to as "Premises" is more particularly described as:

Property ID No. : 56434233060300010

Legal Description attached hereto in **Exhibit "1"** and incorporated herein.

WHEREAS, the Tenant desires to lease a portion of such Premises, as more fully depicted in **Exhibit "2"** attached hereto and incorporated herein, for the purpose of locating and maintaining portable units for the operation of a Charter School as provided for by Florida Statute and approved by the School District of Palm Beach County, Florida. Said Charter School shall be a maritime academy organized and designed to educate high school students in grades 9 through 12 whose principal operation will be to provide an educational curriculum that incorporates both high academic standards and hands-on performance skills that are based on maritime industry standards; and

WHEREAS, the City and Tenant entered into that certain Lease dated April 5, 2006 which set forth conditions and covenants for Tenant to perform including but not limited to Tenant clearing the necessary portions of the Property, and demolishing the vacant structures located on the Property at Tenant's sole expense; and

WHEREAS, Tenant has performed and kept all conditions and covenants of the aforementioned Lease dated April 5, 2006; and

WHEREAS, Tenant desires to continue leasing the premises for the purposes of operating a Charter School.

NOW, THEREFORE, in consideration of the covenants herein contained, on the part of the Tenant to be kept and performed, the Landlord does hereby lease the Premises to the Tenant.

To Have and to Hold the same under the following terms and conditions:

1. RENT

Rent shall be the sum of Five Hundred and 00/100 Dollars ($500.00) per month for the term of this Lease. The rent is payable on the 1st day of the month. For the first month, rent shall be paid upon execution of the agreement. All rent payments shall be due and payable at Landlord's address, attention Finance Department, in advance without demand together with other monthly payments as set forth herein, together with applicable Florida sales tax unless an exemption certificate is provided. Mailing the rent does not constitute payment. It must be received at the designated address to be considered paid. In the event Landlord has not received such rent and other payments due under the terms of this Lease, Landlord may terminate this lease. In the event, Landlord opts, at its sole discretion, to continue under the terms of this Agreement, in addition to any other remedy provided for herein, Tenant shall also pay a late fee equal to 5% of the payment that is past due. If Tenant's check is returned unpaid by the bank, Tenant shall pay Landlord an additional charge of $35.00 to cover the expense of process and thereafter, Landlord shall have the right to require all payments to be made in the form of cash, cashier's check, or money order.

(b) All taxes (unless exempt under Tenant's 501(c)(3) status), charges, costs, assessments, insurance and expenses that Tenant assumes or agrees to pay hereunder, together with all interest and late charges that may accrue thereon in the event of the failure of Tenant to pay those items and all other damages, costs, expenses and sums that Landlord may suffer or incur, or that may become due by reason of any default of Tenant or failure by Tenant to comply with the terms and conditions of this Lease, shall be deemed to be additional rent and in the event of non-payment, Landlord shall have all rights and remedies as herein provided for failure to pay rent.

2. LEASE TERM

The Term of this Lease shall commence at midnight of the day previous to the first day of the lease term which shall be on the 6th day of November, 2008, and ending at midnight on the last day of the lease term, which shall be on the 5th day of November, 2009.

3. USE

(a) Tenant, its successors and assigns, shall use the Premises exclusively for locating and maintaining portable units for the purpose of operating a Charter School as provided for by Florida Statute and approved by the School District of Palm Beach County, Florida. Said Charter School shall be a maritime academy organized and designed to educate high school students in grades 9 through 12 whose principal purpose will be to provide an educational curriculum that incorporates both high academic standards as well as hands-on performance skills that are based on maritime industry standards. (Hereinafter referred to as "Program".)

(b) The Premises may not be used for illegal, immoral or improper purposes.

(c) Tenant's failure to comply with any of the requirements set forth in this Section shall be deemed a material breach of this Lease and grounds for termination of same.

4. TENANT'S OPERATIONS

Tenant shall employ or retain a suitable and sufficient staff to operate Tenant's Program. All persons employed by Tenant shall be employees of Tenant, and in no event shall the Landlord be deemed to be an employer of any persons working for Tenant. The Tenant agrees that each person employed or associated with the Tenant shall be required to maintain a neat, clean appearance and conduct himself/herself in a professional manner; and, in that regard, the Tenant will cooperate with the Landlord (including giving due consideration to any complaints registered with the Landlord with respect to such person or persons) to assure that such required appearance and conduct is maintained at all times.

5. SITE PLAN

Tenant's site plan depicting the location of the portable units, landscaping and parking plan is more fully depicted and attached hereto in **Exhibit "3"** and incorporated herein. Tenant shall be responsible for locating, stabilizing and maintaining portable units owned and or leased by Tenant. Post occupancy, Tenant shall be responsible for removing the portable units, cleaning and vacating premises.

6. IMPROVEMENTS

(a) In the event that Tenant desires to make any improvements, prior to making such improvements, Tenant shall submit to Landlord in writing a detailed description of the proposed improvements. Any such proposed improvements shall be subject to final approval by Landlord. Tenant agrees all improvements made by Tenant shall remain upon the Premises at the expiration or earlier termination of the Lease and shall become the property of the Landlord.

(b) Tenant shall have the right to repair, replace or reconfigure, at Tenant's sole expense, the fence surrounding the Property.

7. INSURANCE

(a) Prior to execution of this Lease, Tenant shall provide certificates evidencing insurance coverages as required hereunder. All insurance policies shall be issued by companies authorized to do business under the laws of the State of Florida. The certificates shall clearly indicate that the Tenant has obtained insurance of the type, amount, and classification as required for strict compliance with this Section and that no material change or cancellation of the insurance shall be effective without thirty (30) days prior written notice to the Landlord. Compliance with the foregoing requirements shall not relieve the Tenant of its liability and obligations under this Lease. All insurance, other than Professional Liability and Workers' Compensation, to be maintained by the Tenant shall specifically include the Landlord as an "Additional Insured."

(b) The Tenant shall maintain, during the life of this Lease, commercial general

liability, including contractual liability insurance in the amount of not less than One Million Dollars ($1,000,000.00) per occurrence to protect the Tenant from claims for damages for bodily and personal injury, including wrongful death, as well as from claims of property damages which may arise from any operations under this Lease, whether such operations be by the Tenant or by anyone directly employed by or contracting with the Tenant.

(c) The Tenant shall, if Tenant owns or leases any automobiles, maintain, during the life of this Agreement, comprehensive automobile liability insurance in the minimum amount of $100,000/$300,000 combined single limit for bodily injury and property damages liability to protect the Tenant from claims for damages for bodily and personal injury, including death, as well as from claims for property damage, which may arise from the ownership, use, or maintenance of owned and non-owed automobiles, including rented automobiles whether such operations be by the Tenant or by anyone directly or indirectly employed or retained by the Tenant.

(d) The Tenant shall maintain, during the life of this Lease, Protection and Indemnity Coverage, with a limit of not less than $200,000.00 per person, per occurrence.

(e) The Tenant shall maintain, during the life of this Lease, adequate Workers' Compensation Insurance and Employer's Liability Insurance in at least such amounts as are required by law for all of its employees per Florida Statute 440.02.

8. PUBLIC UTILITIES

Tenant shall have installed and pay for all utilities, used or consumed in or upon the Premises, which shall include, but not be limited to, gas, electric, water, sewer, telephones, and garbage and trash pickup unless otherwise stipulated herein and shall cause all accounts to be placed in Tenant's name no later than at the time the Tenant takes possession of the Premises.

9. TAXES AND ASSESSMENTS

(a) Tenant shall pay, as additional rent, during the term of the Lease all other assessments levied on the Premises, if any. Tenant shall be exempt from paying any real estate taxes so long as Tenant maintains its 501(c)(3) status and is excepted by the property appraiser.

(b) In the event that any governmental authority having jurisdiction shall levy any assessment against the Premises, of which the Leased Premises is a part, for public betterment or improvement, Tenant shall also pay to Landlord as additional rent, Tenant's proportionate share of said assessments which proportionate share shall be calculated by multiplying the total assessment by the percentage for which the Tenant's Premises is a portion of the whole premises assessed. Landlord shall take the benefit of the provisions of any statute or ordinance permitting any such assessment for public betterment or improvement to be paid over a period of time. The obligation of Tenant to pay any assessment for improvements shall only be for installments during the period of the tenancy.

10. REPAIRS: MAINTENANCE OF PREMISES

Tenant shall keep the Premises, which includes, but is not limited to, the grounds, the portable units and any and all electrical, fire alarms and smoke detectors, plumbing, heating, air-conditioning vents and filters, and other mechanical installations therein, all doors and all plate glass doors and windows, in good order and clean and attractive appearance, making all repairs, alterations, replacements and modifications at its own expense.

The Tenant must landscape the area in accordance with the landscaping code, and Tenant shall be responsible for all future maintenance and upkeep of such landscaping during this Lease.

11. ALTERATIONS

Except as required by this Lease, Tenant shall not make any alterations, improvements or additions to the Premises during the term of the Lease or any extension thereof without first obtaining the written consent of Landlord. Tenant shall not cut or drill into, or secure any fixture, apparatus or equipment of any kind to any part of the Premises without first obtaining written consent of Landlord. All such alterations, improvements and additions made by Tenant shall remain upon the Premises at the expiration or earlier termination of the Lease and shall become the property of the Landlord (except personal property, including but not limited to Tenant's portable units or any fixtures purchased with public funds), unless Landlord shall, prior to such termination, have given written notice to Tenant to remove same, in which event Tenant shall remove such alterations, improvements and additions and restore the Premises to the same good order and condition in which they were at the commencement of the Lease. Should Tenant fail to do so, Landlord may do so, collecting the cost and expense thereof from Tenant as additional rent.

12. COVENANTS OF TENANT

Tenant covenants that it shall:

(a) Comply with the terms of any State or Federal Statute or local ordinance or regulation applicable to Tenant or its use of the Premises, and save the Landlord harmless from penalties, fines, costs, expenses, or damages resulting from its failure to do so; and

(b) Comply with the terms and conditions set forth herein relating to the use, operation and maintenance of the Premises; and

(c) Give to Landlord prompt written notice of any accident, fire, or damage occurring on or to the Premises; and

(d) Conduct its business on the Premises in a dignified and professional manner and keep the Premises in first-class condition in accordance with high standards of operation; and

(e) Comply with all rules and regulations of the Landlord in effect at the time of

the execution of the Lease as same may be amended or promulgated from time to time by Landlord, which Landlord shall deem necessary in connection with the Premises, of which the Premises are a part, including the installation of such fire extinguishers and other safety equipment as the Landlord may require; and comply with the recommendations of the Landlord's insurance carriers and their rate-making bodies; and

(f) Tenant shall have no power or authority to create any lien or permit any lien to attach to the Premises, reversion or other estate of Landlord in the Premises in general or other improvements thereof, and all supplies, contractors, artisans, mechanics, and laborers and other persons contracting with Tenant with respect to the Premises or any part thereof, are hereby charged with notice that the interest of Landlord shall not be subject to liens for improvements made by or on behalf of Tenant, and therefore, Tenant agrees to do all things necessary to prevent the filing of any mechanic's or other liens against the Premises or any part thereof by reasons of work, labor services, or materials supplied or claimed to have been supplied to Tenant, or anyone holding the Premises, or any part thereof, through or under Tenant. If any such lien shall at any time be filed against the Premises, Tenant shall cause the same to be discharged of record within ten (10) days after the date of filing. If Tenant shall fail to discharge such lien within said period, then in addition to any other right or remedy of Landlord resulting from Tenant's default, Landlord may, but shall not be obligated to, discharge the same by paying the amount claimed to be due or by procuring the discharge by giving security or in such manner as is, or may be, prescribed by law; and

(g) Repay Landlord, on demand, all sums disbursed or deposited by Landlord pursuant to the terms and conditions of this Agreement, including Landlord's costs, expenses and reasonable attorney's fees and such fees for appeals incurred by Landlord in connection therewith; and

(h) Tenant covenants that it shall not do any of the following without the prior consent in writing of Landlord:

(1) Use or operate any machinery or emit any noises or noxious odors from the Premises that is harmful to the Premises or unreasonably disturbing to other tenants near the Premises.

(2) Do or suffer to be done, anything objectionable to the fire insurance companies whereby the fire insurance or any other insurance now in force or hereafter to be placed on the Premises or any part thereof, or on the building of which the Premises may be a part, shall become void or suspended, or be rated as a more hazardous risk than at the date when Tenant receives possession hereunder. In case of a breach of this covenant, in addition to all other remedies of Landlord hereunder, Tenant shall pay to Landlord as additional rent any increases of premiums on insurance carried by Landlord on Landlord's Premises, or any part thereof, or on the building of which the Premises may be a part, caused in any way by the occupancy of Tenant.

Nothing herein contained shall prevent Tenant from utilizing the premises for the Uses described in Paragraph 3 herein.

(3) Commit or suffer to be committed by any person, any waste upon the Premises or any nuisance or other act which may disturb the quiet enjoyment of any occupant of Landlord's Premises.

(4) Tenant shall neither use nor occupy the Premises or any part thereof for any unlawful, disreputable, or ultra-hazardous purpose nor operate or conduct its business in a manner constituting a nuisance of any kind in the judgment of Landlord. Tenant shall immediately, on discovery or notice of any unlawful or ultra-hazardous use, take action to halt such activity.

13. RIGHTS OF LANDLORD

Landlord reserves in addition to any rights reserved herein, the following rights with respect to the Premises:

(a) At all reasonable times, by itself or its duly authorized agents, to go upon and inspect the Premises, and at its option to make repairs, alterations, and additions thereto. If Tenant shall not be personally present, to open and permit an entry by Landlord into the Premises, and if an entry therein shall be necessary in the case of an emergency, it being understood that hurricanes or severe storm warnings shall constitute such an emergency, Landlord or Landlord's agents may make forcible entry without rendering Landlord or such agent liable therefore and without in any manner affecting the obligations and covenants of this Lease. Tenant hereby grants Landlord the necessary licenses to carry out the terms of this provision.

(b) The exercise of any right reserved to Landlord in this provision or otherwise, shall not be deemed an eviction or disturbance of Tenant's use and possession of the Premises and shall not render Landlord liable in any manner to Tenant or to any other person, provided Tenant's use shall not be unreasonably impaired.

14. INDEMNIFICATION

(a) Tenant shall indemnify Landlord and its agents and save it harmless from and against any and all claims, actions, damages, liability, and expense, including attorney's fees, in connection with loss of life, personal injury, or damage to property occurring in or arising out of the Premises, adjacent sidewalks, or any other areas, occasioned wholly or in part by any act or cause whatsoever, any occurrence, negligence, misconduct or omission of Tenant, its agents, subtenants, licenses, contractors, employees, students, parents or other invitees.

In case Landlord shall be made a party to any litigation commenced by or against Tenant, its agents, subtenants, licenses, contractors, or employees, then Tenant shall protect and hold Landlord harmless and shall pay all costs, expenses and reasonable attorney's fees incurred or paid by Landlord in connection with such litigation. Nothing contained in this Provision shall be construed or interpreted as consent by the Landlord to be sued, nor as a waiver of sovereign immunity beyond the waiver provided in Section 768.28, Florida Statutes.

(b) Tenant shall pay all claims, losses, liens, fines, settlements or judgments of any nature whatsoever in connection with the foregoing indemnifications including, but not limited to, reasonable attorney's fees, and court and/or arbitration costs. These indemnifications shall survive the term of this Lease or any renewal thereof.

15. TRADE FIXTURES

All trade fixtures including, but not limited to, the portable units installed by Tenant on the Premises shall remain the property of Tenant (except any fixtures purchased with public funds) and shall be removed at the expiration or earlier termination of the Lease or any renewal or extension thereof, and in the event of such removal, Tenant shall have repaired the damage caused by such removal, and promptly restored the Premises to its original order and condition within thirty (30) days of removal. Any such trade fixture not removed at or prior to such termination shall become the property of the Landlord unless said trade fixtures are purchased with public funds, in such case those fixtures shall become property of the School Board of Palm Beach County. If the Tenant fails to timely remove all fixtures, the Landlord may do so and send an invoice to the Tenant which must be paid within thirty (30) days of the date of the receipt.

16. ASSIGNING, MORTGAGING, SUBLETTING

(a) Tenant shall not directly or indirectly assign, create a security interest in, pledge, mortgage, or encumber any legal or equitable interest in the Lease, in whole or in part, or sublet the whole or any part of the Premises, or permit the use of the whole or any part hereof by a license or concessionaire or any person without first obtaining the written consent of Landlord, which the parties agree may be withheld for any reason whatsoever in Landlord's sole and absolute discretion. In the event that such assignment, subletting, licensing, or granting of a concession is consented to, Tenant shall nevertheless remain liable for the performance of all the provisions of the Lease.

(b) Any approved assignment or sub-lease of the Premises, shall forever terminate all rights of Tenant to possession of the Premises, notwithstanding any provision in any such assignment or sublease to the contrary, and notwithstanding Landlord's consent to such assignment or sublease. Thereafter, Landlord may exercise against any subtenant or assignee all rights and remedies herein provided upon default, without notice to Tenant, and Tenant shall have no right to re-enter the Premises upon default of the assignee or sublessee, but Tenant shall remain liable, jointly and severally, with any assignee or subtenant for the performance of all of the covenants and conditions of the Lease, including, but not limited to, the payment to Landlord of all payments due or to become due to Landlord hereunder.

17. PERFORMANCE OF TENANT'S COVENANTS

Tenant shall perform all of the covenants and conditions on its part to be performed, and it will immediately, upon receipt of written notice, where notice of non-performance is required by the Lease, comply with the requirements of such notice, and further, if Tenant shall violate any covenant or condition herein, whether or not notice is required, Landlord

may, at its option, do or cause to be done any or all of the things required by the Lease. In so doing, Landlord shall have the right to cause its agents, employees, and contractors to enter upon the Premises, and in such event shall have no liability to Tenant for any loss or damages resulting in any way from such action. Tenant hereby grants Landlord all necessary licenses required to carry out the terms of this provision. Notwithstanding Section 15 above, Tenant shall pay to Landlord, within ten (10) days of demand, any monies paid or expenses incurred by Landlord in taking such actions, including attorney's fees and such sums shall be collectible from Tenant as additional rent hereunder.

18. SURRENDER AND HOLDING OVER

Tenant, upon expiration or termination of the Lease, either by lapse of time or otherwise, shall peaceably surrender to Landlord the Premises and in good repair as required in the Lease. In the event that Tenant shall fail to surrender the Premises upon demand, Landlord, in addition to all other remedies available to it hereunder, shall have the right to immediately file for a writ of possession with the Court with no prior notice being given to Tenant.

19. EVENTS OF DEFAULT

The occurrence of any of the following shall, in addition to any other events of default or breach as provided throughout the Lease, constitute an event of default hereunder:

(a) The filing of a petition by or against Tenant for relief under the Bankruptcy Code, or for its reorganization or for the appointment of a receiver or trustee of Tenant or Tenant's Premise; or an assignment by Tenant for the benefit of creditors; or the taking possession of the Premise of Tenant by any governmental officer or agency pursuant to statutory authority for the dissolution or liquidation of Tenant; or if a temporary or permanent receiver or trustee shall be appointed for Tenant or for Tenant's Premise and such temporary or permanent receiver or Trustee shall not be discharged within thirty (30) days from the date of appointment; or any other execution, levy, attachment or other process of law upon Tenant's interest in the leasehold estate or any part thereof; or if any judgment entered against Tenant has not been satisfied or bonded within thirty (30) days of the date of the judgment.

(b) Failure of Tenant to pay when due without notice any installment of rent hereunder, or any other sum herein required to be paid by Tenant if such payment remains unpaid for more than fifteen (15) days after written notice of such failure to pay from Landlord.

(c) Vacation or abandonment of the Premises or permitting the same to be empty and unoccupied, or the failure to open and actively conduct its business for a period of thirty (30) consecutive calendar days, unless required by the curriculum calendar as set forth by either the School District of Palm Beach County or the state regulatory agency governing charter schools, without written consent of Landlord.

(d) Tenant's failure to perform or observe any other provision of the Lease, after written notice and demand, provided that, if such failure is of such a character as not to

permit immediate compliance in the sole opinion of Landlord, then Tenant's failure to proceed diligently and immediately upon receipt of notice to commence the cure of such failure, and thereafter to commence such cure with all reasonable dispatch within five (5) days after written notice from Landlord, and to complete or comply with the provision within a reasonable period as established by Landlord.

(e) Notwithstanding any provision in this Lease to the contrary, any Tenant default or breach hereunder is subject to notice and cure provisions set forth herein and other matters which are not within Tenant's control.

20. LANDLORD'S REMEDIES UPON DEFAULT BY TENANT

(a) Upon the occurrence of any event or events of default or other breach of this Lease by Tenant, and after notice to Tenant and expiration of cure period, Landlord shall have the option to pursue any one or more of the following remedies: (i) Landlord shall have the right, at its election, to cancel and terminate this Lease and dispossess Tenant; and (ii) Landlord may enter upon the Premises and do whatever Tenant is obligated to do under this Lease (and Tenant agrees to reimburse Landlord on demand for any expenses which Landlord may incur in effecting compliance with Tenant's obligations under this Lease and Tenant further agrees that Landlord shall not be liable for any damages resulting to the Tenant from such action).

(b) The various rights and remedies, powers, options and elections of Landlord reserved, expressed, or contained in the Lease are distinct, separate and cumulative, and not one of them shall be deemed to be exclusive of the other rights, remedies, powers or options provided herein or are now or may hereafter be conferred upon Landlord by statute or by law or equity.

(c) No receipt of money by Landlord from Tenant after notice and expiration of cure period for default or cancellation of this Lease shall: (i) reinstate, continue, or extend the term or affect any notice given to Tenant, (ii) operate as a waiver of the right of Landlord to enforce the payment of rent and additional rent then due or to become due, or (iii) operate as a waiver of the right of Landlord to recover possession of the Premises by suit, action, proceeding, or other remedy. After: (i) service of notice of termination and forfeiture as herein provided and the expiration of the time specified therein, (ii) the commencement of any suit, action, proceeding, or other remedy, or (iii) final order or judgment for possession of the Premises, Landlord may demand, receive and collect any monies due, without in any manner affecting such notice, order or judgment. Any and all such monies so collected shall be deemed to be payment on account of the use and occupation of the Premises or at the election of Landlord, on account of the liability of Tenant hereunder.

(d) Any sums which may be expended by Landlord in accordance with the terms of this Lease that are paid on behalf of Tenant or due to Tenant's default hereunder shall bear interest at the highest rate allowed under Florida law and Tenant shall be liable for such sums plus such interest as additional rent hereunder.

21. AUTHORITY

(a) All persons executing the Lease on behalf of a corporate tenant (or other entity) personally represent and warrant that they have been authorized to execute the Lease by such tenant. Evidence of such authority shall be provided upon request.

(b) Tenant hereby represents and warrants that it has and will continue to maintain all licenses and approvals required to conduct its business, and that it will at all times conduct its business activities in a reputable manner. Proof of such licenses and approvals shall be submitted to the Landlord upon request.

(c) Tenant shall be solely responsible for obtaining and complying with all necessary permits, approvals and authorizations required for any work done pursuant to this Lease from any federal, state, regional, county, or city agency.

22. LIABILITY OF LANDLORD

(a) Tenant shall look solely to Landlord's interest in the Premises and shall look only to Landlord's personal property used in connection with the Premises for the satisfaction of any judgment or decree requiring the payment of money by Landlord, based upon any default hereunder, and no other property or asset of Landlord shall be subject to levy, execution, or enforcement procedure for the satisfaction of such judgment or decree.

(b) The provisions herein permitting Landlord to enter and inspect the Premises are made to ensure that Tenant is in compliance with the terms and conditions hereof and to make repairs that Tenant has failed to make. Landlord shall not be liable to Tenant for any entry on the Premises for inspection purposes. Landlord's right to inspect the Premises shall be on reasonable notice to the Tenant except in emergency circumstances.

23. LEGAL EXPENSES

Should suit be brought for the recovery of possession of the Premises, or for rent or any other sum due Landlord under the Lease, or because of the breach of any of Tenant's covenants under the Lease, the prevailing party shall be entitled to recover its reasonable attorney's fees and costs, including such fees and costs on appeal.

24. EASEMENTS, AGREEMENTS, OR ENCUMBRANCES

The parties shall be bound by all existing easements, agreements, and encumbrances of record relating to the Premises including, but not limited to any deed or plat restrictions.

25. TIME OF THE ESSENCE

Time is of the essence in all provisions of this Lease.

26. QUIET ENJOYMENT

Landlord warrants that Tenant shall be granted peaceable and quiet enjoyment of the Premises free from any eviction or interference by Landlord if Tenant pays the rent and other charges provided herein and otherwise fully performs and complies with the terms, conditions and provisions of this Lease.

27. ENTIRETY OF CONTRACTUAL AGREEMENT

The Lease and all Amendments and Exhibits set forth all of the covenants, promises, agreements, conditions, and understandings between Landlord and Tenant concerning the Premises and there are no covenants, promises, conditions, or understandings either oral or written between them other than herein set forth. Except as otherwise provided, no subsequent alteration, change or addition to the Lease shall be binding upon the Landlord or Tenant unless reduced to writing and signed by both parties. Except at Landlord's option, no part of this Lease may be recorded in any public records of any municipality or county records.

28. VENUE

This Lease and any dispute, disagreement, or issue of construction or interpretation arising hereunder whether relating to its execution, its validity, the obligations provided therein, performance or breach shall be governed and interpreted according to laws of the State of Florida. Any and all legal action necessary to enforce the Lease will be held in Palm Beach County.

29. INVALID PROVISIONS

If any provision of the Lease shall be determined to be void by any court of competent jurisdiction or any law enacted subsequent to the date hereof, then such determination shall not affect any other provision hereof, all of which other provisions shall remain in full force and effect.

30. TERMINOLOGY AND CAPTIONS

All pronouns, singular, plural, masculine, feminine or neuter, shall mean and include the person, entity, firm or corporation to which they relate as the context may require. Wherever the context may require, the singular shall mean and include the plural and the plural shall mean and include the singular. The term "Agreement" as used herein, as well as the terms "herein", "hereof", "hereunder", "hereinafter" and the like mean this Agreement in its entirety and all exhibits, amendments and addenda attached hereto and made a part hereof. The captions and paragraph headings are for reference and convenience only and do not enter into or become a part of the context of this Lease, nor shall such headings affect the meaning or interpretation of this Lease.

31. SUCCESSORS AND ASSIGNS

All rights, obligations and liabilities given to, or imposed upon, the parties hereto shall extend to and bind the respective heirs, executors, administrators, successors, sublessees, licensees, concessionaires and assigns of such parties hereof. No rights, however, shall inure to the benefit of any assignee of Tenant unless the assignment to such assignee has been approved by Landlord in writing as hereinabove set forth. Nothing contained in the Lease shall in any manner restrict Landlord's right to assign or encumber the Lease and, in the event Landlord sells its interest in the Premise and the purchaser assumed Landlord's obligations and covenants, Landlord shall thereupon be relieved of all obligations hereunder.

32. NOTICES

All notices required in this Agreement shall be sent by certified mail, return receipt requested, and if sent to the Landlord shall be mailed to:

City of Riviera Beach
Attn: City Manager
600 West Blue Heron Blvd
Rivera Beach, Fl 33404

With a copy to:
Pamala H. Ryan
City Attorney
600 West Blue Heron Blvd
Rivera Beach, Fl 33404

and if sent to the Tenant shall be mailed to:

Riviera Beach Maritime Academy, Corp.
Attn: Gerard D. Straub, Sr., Chairman
c/o Viking Yacht Service Center
1550 Avenue "C" East
Riviera Beach, FL 33404

With a copy to:
Law Office of Isaacs Williams, P.A.
Attn: Ethel Isaacs Williams, Esq.
2655 North Ocean Drive, Suite 502
Riviera Beach, FL 33404

33. PREPARATION

This Agreement shall not be construed more strongly against either party regardless of who was more responsible for its preparation.

34. MATERIALITY

All provisions of the Agreement shall be deemed material, in the event Tenant fails to comply with any of the provisions contained in this Agreement or exhibits, amendments and addenda attached hereto, said failure shall be deemed a material breach of this Agreement and Landlord may at its option and without notice terminate this Agreement.

[SIGNATURES TO FOLLOW]

LEASE WITH THE CITY OF RIVIERA BEACH

IN WITNESS WHEREOF, the Parties unto this Lease have set their hands and seals on the day and date first written above.

FOR THE RIVIERA BEACH MARITIME ACADEMY, CORP., AS TENANT

WITNESS
William J. Healey
PRINT WITNESS NAME

By: _____
GERARD D. STRAUB, SR.
CHAIRMAN

WITNESS
Christina Quisard
PRINT WITNESS NAME

STATE OF FLORIDA
COUNTY OF PALM BEACH

The foregoing instrument was acknowledged before me this 29th day of October 2008, by Gerard D. Straub, Sr., as Chairman of the Riviera Beach Maritime Academy Corp., who is personally known to me or who produced _____ as identification.

Notary Public, State of Florida

FOR THE CITY OF RIVIERA BEACH, AS LANDLORD:

Jacqueline Burgess
WITNESS
Jacqueline Burgess
PRINT WITNESS NAME

Claudene L Anthony
WITNESS
CLAUDENE L ANTHONY
PRINT WITNESS NAME

BY: Thomas A. Masters
THOMAS A. MASTERS
MAYOR

ATTEST:

BY: C E Ward
CARRIE E. WARD, MMC
CITY CLERK

APPROVED AS TO FORM AND
LEGAL SUFFICIENCY

BY: Pamala H. Ryan
PAMALA H. RYAN
CITY ATTORNEY

DATE: 10/28/08

BOUNDARY SURVEY
A PORTION OF PLAT OF OSCEOLA PARK
PLAT BOOK 2, PAGES 90 – 91
PALM BEACH COUNTY, FLORIDA.

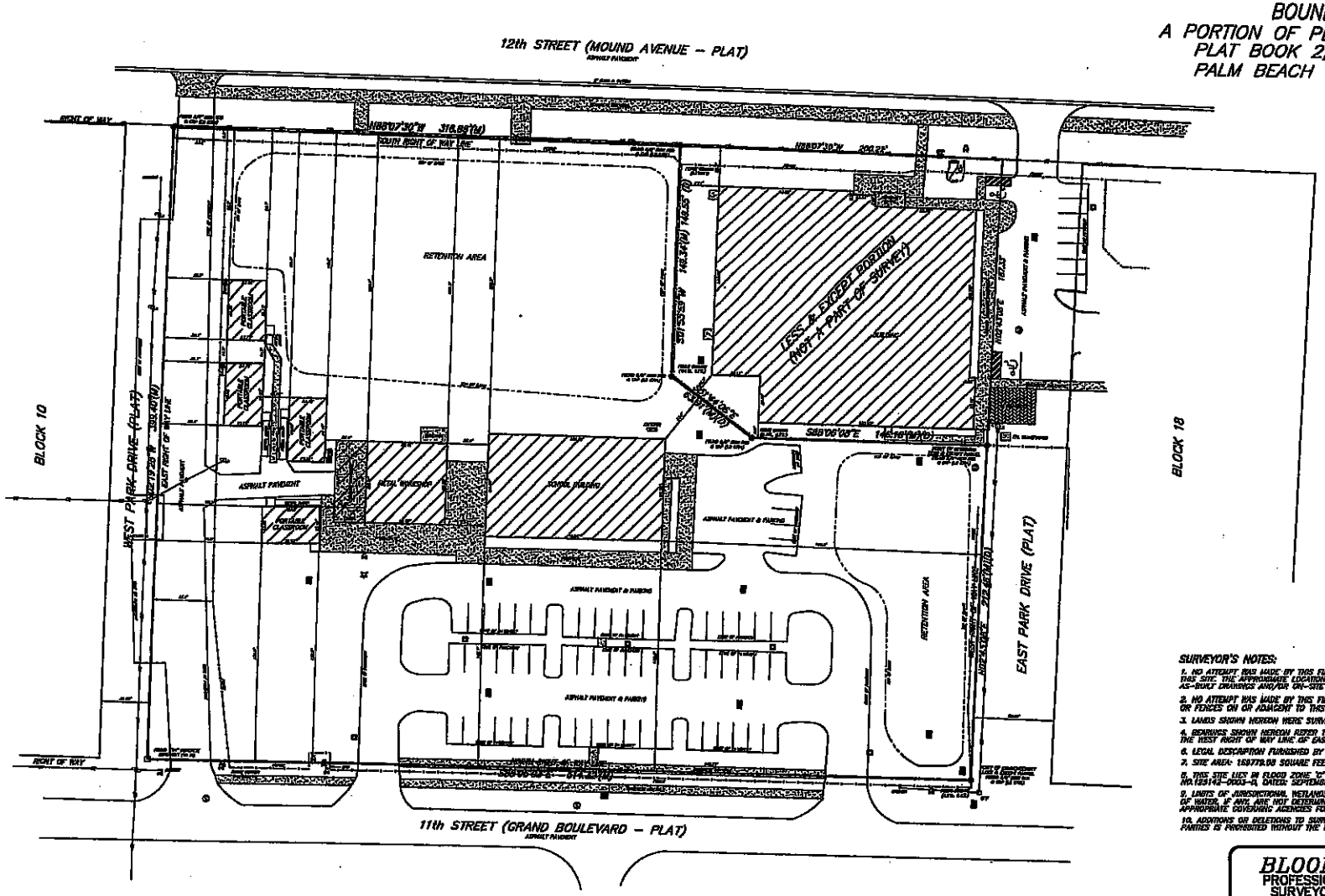

LEGAL DESCRIPTION:

A PART OF OSCEOLA PARK, AS SHOWN ON THE PLAT OF RIVIERA IN PLAT BOOK 2, PAGES 90 AND 91, OF THE PUBLIC RECORDS OF PALM BEACH COUNTY, FLORIDA, AND MORE PARTICULARLY DESCRIBED AS FOLLOWS:
BOUNDED ON THE NORTH BY THE SOUTH LINE OF MOUND AVENUE WHEN PRODUCED WEST TO CONNECT WITH THE BOUNDARY LINE OF WEST PARK DRIVE; BOUNDED ON THE EAST BY THE WEST BOUNDARY LINE OF EAST PARK DRIVE; BOUNDED ON THE WEST BY THE EAST BOUNDARY LINE OF WEST PARK DRIVE; BOUNDED BY THE SOUTH BY THE NORTH BOUNDARY LINE OF GRAND BOULEVARD, AS ALL OF SAID STREETS AND BOUNDARY LINES APPEAR IN RIVIERA, A SUBDIVISION IN THE TOWN OF RIVIERA, ACCORDING TO THE PLAT OF SAID SUBDIVISION ON FILE IN THE OFFICE OF THE CLERK OF THE CIRCUIT COURT OF PALM BEACH COUNTY, FLORIDA, IN PLAT BOOK 2, PAGES 90 AND 91.
LESS THEREFROM:
A PART OF OSCEOLA PARK, AS SHOWN ON THE PLAT OF RIVIERA IN PLAT BOOK 2, PAGES 90 AND 91, OF THE PUBLIC RECORDS OF PALM BEACH COUNTY, FLORIDA, AND MORE PARTICULARLY DESCRIBED AS FOLLOWS:
COMMENCING AT A POINT AT THE INTERSECTION OF THE NORTH RIGHT OF WAY OF GRAND BOULEVARD AND THE WEST RIGHT OF WAY OF EAST PARK DRIVE AS SHOWN ON THE PLAT OF RIVIERA IN PLAT BOOK 2, PAGES 90 AND 91 OF THE PUBLIC RECORDS OF PALM BEACH COUNTY, FLORIDA; THENCE NORTH 02°43'05" EAST ALONG THE WEST RIGHT OF WAY LINE OF EAST PARK DRIVE FOR A DISTANCE OF 312.05 FEET TO THE POINT OF BEGINNING; THENCE CONTINUED ALONG SAID RIGHT OF WAY NORTH 02°43'00" EAST, A DISTANCE OF 127.33 FEET; THENCE NORTH 88°03'53" WEST ALONG THE SOUTHERLY RIGHT OF WAY LINE OF 13th STREET (MOUND AVENUE PER PLAT) AS LAID OUT AND IN USE A DISTANCE OF 200.22 FEET; THENCE SOUTH 01°33'59" WEST, A DISTANCE OF 149.85 FEET; THENCE SOUTH 31°44'08" EAST, A DISTANCE OF 83.91 FEET; THENCE SOUTH 89°01'06" EAST, A DISTANCE OF 140.16 FEET TO THE POINT OF BEGINNING. SAID LANDS LYING IN THE CITY OF RIVIERA BEACH, FLORIDA. CONTAINING 3.90 ACRES, MORE OR LESS.

SURVEYOR'S NOTES:

1. NO ATTEMPT WAS MADE BY THIS FIRM TO LOCATE UNDERGROUND UTILITIES ON/OR ADJACENT TO THIS SITE. THE APPROXIMATE LOCATION OF ALL UTILITIES SHOWN HEREON WERE TAKEN FROM AS-BUILT DRAWINGS AND/OR ON-SITE LOCATION AND SHOULD BE VERIFIED BEFORE CONSTRUCTION
2. NO ATTEMPT WAS MADE BY THIS FIRM TO LOCATE UNDERGROUND FOOTINGS OF BUILDINGS OR FENCES ON OR ADJACENT TO THIS SITE.
3. LANDS SHOWN HEREON WERE SURVEYED WITHOUT BENEFIT OF TITLE SEARCH.
4. BEARINGS SHOWN HEREON REFER TO AN ASSUMED MERIDIAN OF N02°43'05"E. ALONG THE WEST RIGHT OF WAY LINE OF EAST PARK DRIVE.
5. LEGAL DESCRIPTION FURNISHED BY CLIENT.
7. SITE AREA: 169778.00 SQUARE FEET OR 3.90 ACRES MORE OR LESS.
8. THIS SITE LIES IN FLOOD ZONE "X" AS SCALED AND INTERPOLATED FROM FEMA MAP PANEL NO 12314C-0063-A, DATED SEPTEMBER 3rd, 1992.
9. LIMITS OF JURISDICTIONAL WETLANDS, DITCHES, DRAINAGE WAYS, WATER FLOWS, AND/OR BODIES OF WATER, IF ANY, ARE NOT DETERMINED BY THIS SURVEY. CLIENT IS ADVISED TO CONTACT APPROPRIATE GOVERNING AGENCIES FOR POSSIBLE LIMITS OF JURISDICTION.
10. ADDITIONS OR DELETIONS TO SURVEY MAPS OR REPORTS BY OTHER THAN THE SIGNING PARTY OR PARTIES IS PROHIBITED WITHOUT THE WRITTEN CONSENT OF THE SIGNING PARTY OR PARTIES.

LEGEND & ABBREVIATIONS

- FIRE DEPARTMENT CONNECTION
- BOND PAPER FACE
- BARBED SCREW ANCHOR
- LIGHT POLE with CONCRETE BASE
- GALED VALVE
- FIRE HYDRANT
- CATCH BASIN
- STORM MANHOLE
- MANHOLE PROJECTED MONE
- FLORIDA POWER & LIGHT
- ELECTRICAL SERVICE
- WATER METER

GRAPHIC SCALE

(IN FEET)
1 inch = 50 ft.

SURVEYOR'S CERTIFICATION:

SURVEY MAP AND REPORT OR THE COPIES THEREOF ARE NOT VALID WITHOUT THE SIGNATURE AND THE ORIGINAL RAISED SEAL OF A LICENSED FLORIDA SURVEYOR AND MAPPER.

ROBERT BLOOMSTER JR.
PROFESSIONAL LAND SURVEYOR
NO. 4134 STATE OF FLORIDA

BLOOMSTER
PROFESSIONAL LAND SURVEYORS, INC.
L.B. #3018

641 NORTHEAST SPENCER STREET
JENSEN BEACH, FLORIDA 34957
PHONE 772-334-0868

SHEET 1 OF 1

DRAWN BY	DBM
SCALE	1" = 50'
FIELD WORK COMPLETED DATE	
FIELD BOOK	SECTION
JOB NO.	11084

REVISIONS

DATE	DESCRIPTION	BY

MARITIME ACADEMY
23013 SANDALFOOT PLAZA
BOCA RATON, PALM BEACH COUNTY, FLORIDA

RESOLUTION NO. 86-11

A RESOLUTION OF THE CITY COUNCIL OF THE CITY OF RIVIERA BEACH, PALM BEACH COUNTY, FLORIDA AUTHORIZING THE MAYOR AND CITY CLERK TO EXECUTE THE LEASE AMENDMENT BETWEEN THE CITY OF RIVIERA BEACH AND RIVIERA BEACH MARITIME ACADEMY, CORP; COMMENCING JUNE 15, 2011 UNTIL AUGUST 30, 2013; AND PROVIDING AN EFFECTIVE DATE.

WHEREAS, the City is the owner of certain real property located approximately a quarter mile west of U.S. Highway One, between 13th Street, 11th Street, and east of Park Drive, which includes property immediately to the south of and located on the property formerly known as Riviera Beach Elementary School parcel; and

WHEREAS, the Riviera Beach Maritime Academy, Corp., desires to extend the lease term for two additional years; and

WHEREAS, the legal description has been adjusted to reflect the property lines that were made a part of the lease for the Boys and Girls Club.

NOW, THEREFORE, BE IT RESOLVED BY THE CITY COUNCIL OF THE CITY OF RIVIERA BEACH, PALM BEACH COUNTY, FLORIDA AS FOLLOWS:

SECTION 1. That the Mayor and City Clerk are authorized to execute the two year Lease Amendment on behalf of the City of Riviera Beach with the Riviera Beach Maritime Academy, Corp.

SECTION 2. That the Riviera Beach Maritime Academy will continue to pay $500 per month to the City for the term of the lease.

SECTION 3. This Resolution shall take effect immediately upon its approval by the City Council.

RESOLUTION NO. 86-11
PAGE 2

APPROVED:

THOMAS A. MASTERS
MAYOR

JUDY L. DAVIS
CHAIRPERSON

ATTEST:

CARRIE E. WARD
MASTER MUNICIPAL CLERK
CITY CLERK

BILLIE E. BROOKS
CHAIR PRO TEM

CEDRICK A. THOMAS
COUNCILPERSON

DAWN S. PARDO
COUNCILPERSON

SHELBY L. LOWE
COUNCILPERSON

MOTIONED BY: Brooks

SECONDED BY: Davis

B. BROOKS Aye

J. DAVIS Aye

C. THOMAS Abstain

D. PARDO Abstain

S. LOWE Aye

REVIEWED AS TO LEGAL SUFFICIENCY

PAMALA HANNA RYAN, CITY ATTORNEY

DATE 6/9/11

GS:dpm.060811

LEASE AMENDMENT

This **LEASE AMENDMENT** (hereinafter referred to as "Amendment") entered into this 15 day of June 2011, by and between the **CITY OF RIVIERA BEACH, FLORIDA,** a municipal corporation, hereinafter referred to as "Landlord," whose address is 600 West Blue Heron Boulevard, Riviera Beach, Florida, 33404, and **Riviera Beach Maritime Academy Corp.,** a Florida not-for-profit corporation authorized to do business in the State of Florida, hereinafter referred to as "Tenant," whose principal office is located at 1550 Avenue "C" East, Riviera Beach, FL 33404.

WITNESSETH:

WHEREAS, the City is the owner of certain real property located approximately a quarter mile west of US Highway One, between 13th Street, 11th Street, and east of Park Drive, which includes property immediately to the south of and located on the formerly known as Riviera Beach Elementary School parcel. The property, hereinafter referred to as "Premises" is more particularly described as:

Property ID No. 56434233060300010

Boundary Survey with the Legal Description attached hereto in **Exhibit "1"** and incorporated herein.

WHEREAS, the Tenant desires to amend that certain Lease Agreement ("Lease") entered into on November 5, 2008, as to the term of the Lease; and

WHEREAS, all recitals, terms and conditions of that certain Lease shall be incorporated herein by reference; and except as modified herein, shall remain in full force and effect.

NOW, THEREFORE, in consideration of the covenants herein contained by reference, on the part of the Tenant to be kept and performed, the Landlord does hereby amend that certain Lease.

To Have and to Hold the same under the following terms and conditions:

Paragraph 1. LEASE TERM

The Term of this Lease shall commence at midnight of the day previous to the first day of the lease term which shall be on the 15 day of June 2011, and ending on the earlier date of midnight on the last day of the lease term, which shall be on the 30th day of August, 2013, or upon conveyance of the Premises.

Except as modified herein, all recitals, terms and conditions of that certain Lease shall remain in full force and effect.

LEASE AMENDMENT WITH THE CITY OF RIVIERA BEACH

IN WITNESS WHEREOF, the Parties unto this Amendment have set their hands and seals on the day and date first written above.

CITY OF RIVIERA BEACH

BY: _____
THOMAS MASTERS
MAYOR

TENANT

BY: _____
GERARD D. STRAUB, SR.
CHAIRMAN

ATTEST:

BY: _____
CARRIE E. WARD, MMC
CITY CLERK

APPROVED AS TO FORM AND
LEGAL SUFFICIENCY

BY: _____
PAMALA H. RYAN
CITY ATTORNEY

DATE: 6/8/11

BOUNDARY SURVEY
A PORTION OF PLAT OF OSCEOLA PARK
PLAT BOOK 2, PAGES 90 – 91
PALM BEACH COUNTY, FLORIDA.

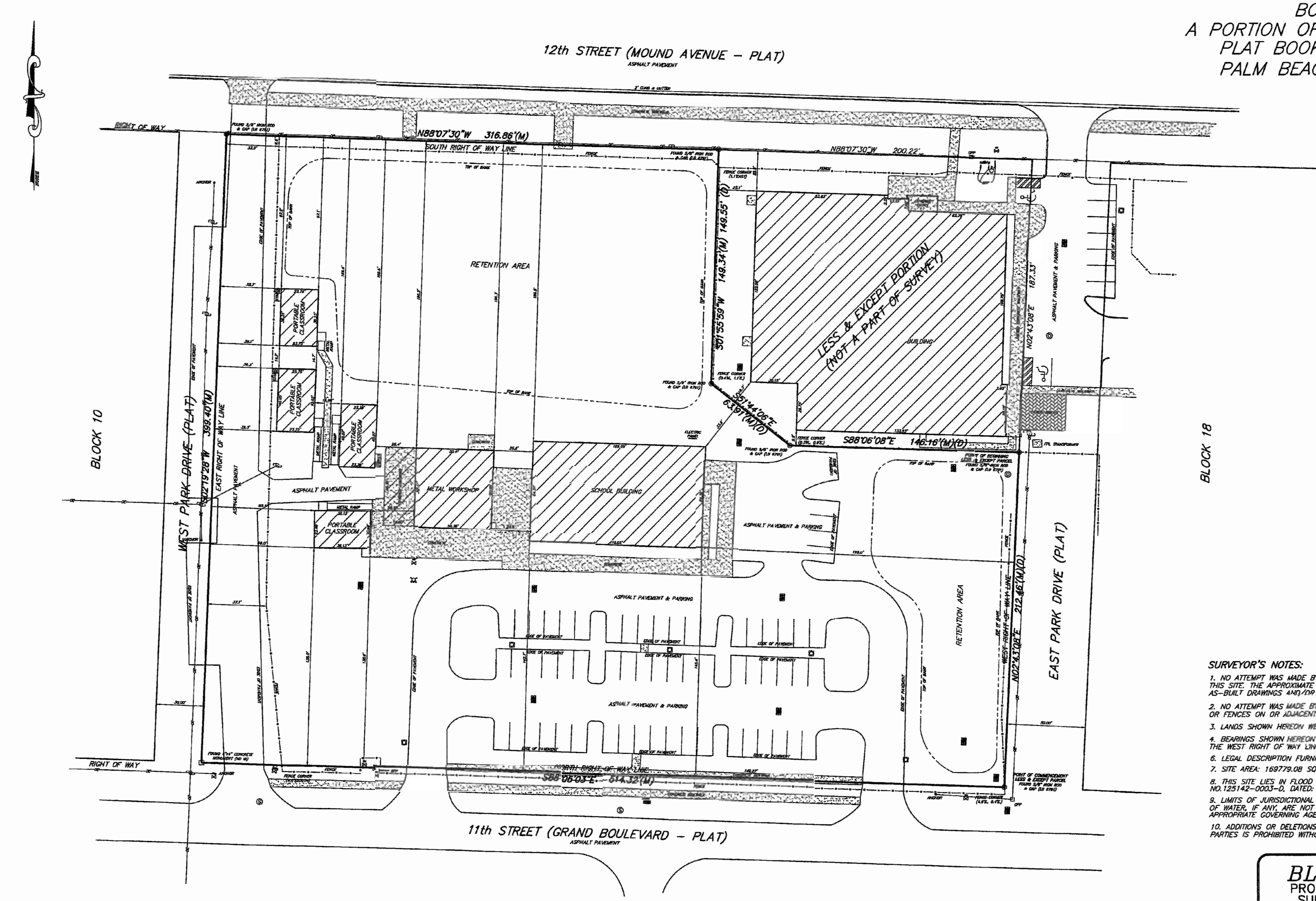

LEGAL DESCRIPTION:

A PART OF OSCEOLA PARK, AS SHOWN ON THE PLAT OF RIVIERA IN PLAT BOOK 2, PAGES 90 AND 91, OF THE PUBLIC RECORDS OF PALM BEACH COUNTY, FLORIDA, AND MORE PARTICULARLY DESCRIBED AS FOLLOWS:

BOUNDED ON THE NORTH BY THE SOUTH LINE OF MOUND AVENUE WHEN PRODUCED WEST TO CONNECT WITH THE BOUNDARY LINE OF WEST PARK DRIVE; BOUNDED ON THE EAST BY THE WEST BOUNDARY LINE OF EAST PARK DRIVE; BOUNDED ON THE WEST BY THE EAST BOUNDARY LINE OF WEST PARK DRIVE; BOUNDED BY THE SOUTH BY THE NORTH BOUNDARY LINE OF GRAND BOULEVARD; AS ALL OF SAID STREETS AND BOUNDARY LINES APPEAR IN RIVIERA, A SUBDIVISION IN THE TOWN OF RIVIERA, ACCORDING TO THE PLAT OF SAID SUBDIVISION ON FILE IN THE OFFICE OF THE CLERK OF THE CIRCUIT COURT OF PALM BEACH COUNTY, FLORIDA, IN PLAT BOOK 2, PAGES 90 AND 91.

LESS THEREFROM:

A PART OF OSCEOLA PARK, AS SHOWN ON THE PLAT OF RIVIERA IN PLAT BOOK 2, PAGES 90 AND 91, OF THE PUBLIC RECORDS OF PALM BEACH COUNTY, FLORIDA, AND MORE PARTICULARLY DESCRIBED AS FOLLOWS:

COMMENCING AT A POINT AT THE INTERSECTION OF THE NORTH RIGHT OF WAY OF GRAND BOULEVARD AND THE WEST RIGHT OF WAY OF EAST PARK DRIVE AS SHOWN ON THE PLAT OF RIVIERA IN PLAT BOOK 2, PAGES 90 AND 91 OF THE PUBLIC RECORDS OF PALM BEACH COUNTY, FLORIDA; THENCE NORTH 02°43'08" EAST ALONG THE WEST RIGHT OF WAY LINE OF EAST PARK DRIVE FOR A DISTANCE OF 212.05 FEET TO THE POINT OF BEGINNING; THENCE CONTINUING ALONG SAID RIGHT OF WAY NORTH 02°43'08" EAST, A DISTANCE OF 187.33 FEET; THENCE NORTH 88°03'53" WEST ALONG THE SOUTHERLY RIGHT OF WAY LINE OF 13th STREET (MOUND AVENUE PER PLAT) AS LAID OUT AND IN USE A DISTANCE OF 200.22 FEET; THENCE SOUTH 01°55'59" WEST, A DISTANCE OF 149.55 FEET; THENCE SOUTH 51°44'06" EAST, A DISTANCE OF 63.91 FEET; THENCE SOUTH 88°06'08" EAST, A DISTANCE OF 146.16 FEET TO THE POINT OF BEGINNING. SAID LANDS LYING IN THE CITY OF RIVIERA BEACH, FLORIDA, CONTAINING 3.90 ACRES, MORE OR LESS.

SURVEYOR'S NOTES:

1. NO ATTEMPT WAS MADE BY THIS FIRM TO LOCATE UNDERGROUND UTILITIES ON/OR ADJACENT TO THIS SITE. THE APPROXIMATE LOCATION OF ALL UTILITIES SHOWN HEREON WERE TAKEN FROM AS-BUILT DRAWINGS AND/OR ON-SITE LOCATION AND SHOULD BE VERIFIED BEFORE CONSTRUCTION
2. NO ATTEMPT WAS MADE BY THIS FIRM TO LOCATE UNDERGROUND FOOTINGS OF BUILDINGS OR FENCES ON OR ADJACENT TO THIS SITE.
3. LANDS SHOWN HEREON WERE SURVEYED WITHOUT BENEFIT OF TITLE SEARCH.
4. BEARINGS SHOWN HEREON REFER TO AN ASSUMED MERIDIAN OF N.02°43'08"E. ALONG THE WEST RIGHT OF WAY LINE OF EAST PARK DRIVE.
6. LEGAL DESCRIPTION FURNISHED BY CLIENT.
7. SITE AREA: 169779.08 SQUARE FEET OR 3.90 ACRES MORE OR LESS.
8. THIS SITE LIES IN FLOOD ZONE 'C' AS SCALED AND INTERPOLATED FROM FEMA MAP PANEL NO.125142-0003-D, DATED: SEPTEMBER 30, 1982.
9. LIMITS OF JURISDICTIONAL WETLANDS, DITCHES, DRAINAGE WAYS, WATER FLOWS, AND/OR BODIES OF WATER, IF ANY, ARE NOT DETERMINED BY THIS SURVEY. CLIENT IS ADVISED TO CONTACT APPROPRIATE GOVERNING AGENCIES FOR POSSIBLE LIMITS OF JURISDICTION.
10. ADDITIONS OR DELETIONS TO SURVEY MAPS OR REPORTS BY OTHER THAN THE SIGNING PARTY OR PARTIES IS PROHIBITED WITHOUT THE WRITTEN CONSENT OF THE SIGNING PARTY OR PARTIES.

LEGEND & ABBREVIATIONS

FIRE DEPARTMENT CONNECTION
WOOD POWER POLE
SANITARY SEWER MANHOLE
LIGHT POST with CONCRETE BASE
WATER VALVE
FIRE HYDRANT
CATCH BASIN
STORM MANHOLE
BFP BACKFLOW PREVENTOR VALVE
FPL FLORIDA POWER & LIGHT
OE OVERHEAD ELECTRIC
WM WATER METER

GRAPHIC SCALE

(IN FEET)
1 inch = 30 ft.

SURVEYOR'S CERTIFICATION:

SURVEY MAP AND REPORT OR THE COPIES THEREOF ARE NOT VALID WITHOUT THE SIGNATURE AND THE ORIGINAL RAISED SEAL OF A LICENSED FLORIDA SURVEYOR AND MAPPER.

ROBERT BLOOMSTER JR.
PROFESSIONAL LAND SURVEYOR
NO. 4134 STATE OF FLORIDA

BLOOMSTER
PROFESSIONAL LAND SURVEYORS, INC.
L.B. #6018

641 NORTHEAST SPENCER STREET
JENSEN BEACH, FLORIDA 34957
PHONE 772-334-0868

SHEET 1 OF 1	
DRAWN BY:	DPK
SCALE:	1" = 30'
FIELD WORK COMPLETED:	6/1/11
FIELD BOOK:	SKETCH
JOB NO.	11466

REVISIONS

DATE:	DESCRIPTION:	BY:

MARITIME ACADEMY
23013 SANDALFOOT PLAZA
BOCA RATON, PALM BEACH COUNTY, FLORIDA

RESOLUTION NO. 86-11
PAGE 2

APPROVED:

THOMAS A. MASTERS
MAYOR

JUDY L. DAVIS
CHAIRPERSON

ATTEST:

CARRIE E. WARD
MASTER MUNICIPAL CLERK
CITY CLERK

BILLIE E. BROOKS
CHAIR PRO TEM

CEDRICK A. THOMAS
COUNCILPERSON

DAWN S. PARDO
COUNCILPERSON

SHELBY L. LOWE
COUNCILPERSON

MOTIONED BY: Brooks

SECONDED BY: Davis

B. BROOKS Aye

J. DAVIS Aye

C. THOMAS Abstain

D. PARDO Abstain

S. LOWE Aye

REVIEWED AS TO LEGAL SUFFICIENCY

PAMALA HANNA RYAN, CITY ATTORNEY

DATE 6/9/11

GS:dpm.060811

RESOLUTION NO. 101-13

A RESOLUTION OF THE CITY COUNCIL OF THE CITY OF RIVIERA BEACH, PALM BEACH COUNTY, FLORIDA, AUTHORIZING THE MAYOR AND CITY CLERK TO EXECUTE THE SECOND LEASE AMENDMENT BETWEEN THE CITY OF RIVIERA BEACH AND RIVIERA BEACH MARITIME ACADEMY, CORP. COMMENCING AUGUST 30, 2013 UNTIL AUGUST 30, 2015; AND PROVIDING AN EFFECTIVE DATE.

WHEREAS, the City is the owner of certain real property located approximately a quarter mile west of U.S. Highway One, between 13th Street, 11th Street, and east of Park Drive, which includes property immediately to the south of and located on the property formerly known as Riviera Beach Elementary School parcel; and

WHEREAS, the Riviera Beach Maritime Academy, Corp., has leased the property from the City since 2006 and desires to extend the lease term for two additional years.

NOW, THEREFORE, BE IT RESOLVED BY THE CITY COUNCIL OF THE CITY OF RIVIERA BEACH, PALM BEACH COUNTY, FLORIDA, as follows:

SECTION 1. That the Mayor and City Clerk are authorized to execute a Second Lease Amendment on behalf of the City of Riviera Beach with the Riviera Beach Maritime Academy, Corp. for an additional two years.

SECTION 2. That this resolution shall take effect immediately upon its approval by the City Council.

PASSED and APPROVED this 7TH day of AUGUST, 2013.

APPROVED:

THOMAS A. MASTERS
MAYOR

CEDRICK A. THOMAS
CHAIRPERSON

CARRIE E. WARD
MASTER MUNICIPAL CLERK
CITY CLERK

DAWN S. PARDO
CHAIR PRO TEM

BRUCE GUYTON
COUNCILPERSON

JUDY L. DAVIS
COUNCILPERSON

TERENCE D. DAVIS
COUNCILPERSON

MOTIONED BY: B. GUYTON

SECONDED BY: J. DAVIS

C. THOMAS	ABSTAIN
D. PARDO	AYE
B. GUYTON	AYE
J. DAVIS	AYE
T. DAVIS	AYE

REVIEWED AS TO LEGAL SUFFICIENCY

PAMALA HANNA RYAN, CITY ATTORNEY

DATE: _____

070213:VYS:syj

SECOND LEASE AMENDMENT

This **SECOND LEASE AMENDMENT** (hereinafter referred to as "Amendment") entered into this 7th day of August, 2013, by and between the **CITY OF RIVIERA BEACH, FLORIDA,** a municipal corporation, hereinafter referred to as "Landlord," whose address is 600 West Blue Heron Boulevard, Riviera Beach, Florida, 33404, and **Riviera Beach Maritime Academy Corp.,** a Florida not-for-profit corporation authorized to do business in the State of Florida, hereinafter referred to as "Tenant," whose principal office is located at 1550 Avenue "C" East, Riviera Beach, Florida 33404.

W I T N E S S E T H:

WHEREAS, the City is the owner of certain real property located approximately a quarter mile west of US Highway One, between 13th Street, 11th Street, and east of Park Drive, which includes property immediately to the south of and located on the formerly known as Riviera Beach Elementary School parcel. The property, hereinafter referred to as "Premises" is more particularly described as:

Property ID No. 56434233060300010

Boundary Survey with the Legal Description attached hereto in **Exhibit "1"** and incorporated herein.

WHEREAS, that certain Lease Agreement ("Lease") entered into on November 5, 2008, was amended by a "Lease Amendment" on June 15, 2011, extending the lease term for an additional two (2) years from June 15, 2011 to August 30, 2013; and

WHEREAS, the Tenant desires to extend the lease term an additional two years from August 30, 2013 to August 30, 2015; and

WHEREAS, all recitals, terms and conditions of that certain Lease shall be incorporated herein by reference; and except as modified herein, shall remain in full force and effect.

NOW, THEREFORE, in consideration of the covenants herein contained by reference, on the part of the Tenant to be kept and performed, the parties hereby agree to amend that certain Lease as follows.

To Have and to Hold the same under the following terms and conditions:

Paragraph 1. LEASE TERM

The Term of this Lease shall commence at midnight of the day previous to the first day of the lease term which shall be on the 30th day of August, 2013, and ending on the earlier date of midnight on the last day of the lease term, which shall be on the 30th day of August, 2015, or upon conveyance of the Premises.

SECOND LEASE AMENDMENT WITH THE CITY OF RIVIERA BEACH

IN WITNESS WHEREOF, the Parties unto this Amendment have set their hands and seals on the day and date first written above.

CITY OF RIVIERA BEACH TENANT

BY: _____ BY: _____ THOMAS MASTERS GERARD D. STRAUB, SR.

MAYOR/CHAIRMAN

ATTEST:

BY: _____

CARRIE E. WARD, MMC

CITY CLERK

APPROVED AS TO FORM AND LEGAL SUFFICIENCY

BY: _____

for PAMALA H. RYAN

CITY ATTORNEY

DATE: _____

RESOLUTION NO. 112-15

A RESOLUTION OF THE CITY COUNCIL OF THE CITY OF RIVIERA BEACH, PALM BEACH COUNTY, FLORIDA AUTHORIZING THE MAYOR AND CITY CLERK TO EXECUTE THE THIRD AMENDMENT TO A LEASE AGREEMENT WITH THE RIVIERA BEACH MARITIME ACADEMY CORPORATION COMMENCING AUGUST 30, 2015 UNTIL AUGUST 30, 2016; AND PROVIDING FOR AN EFFECTIVE DATE.

WHEREAS, on April 5, 2006, the City Council, by Resolution No. 47-06, entered into a 28 month lease agreement from April 6, 2006 to August 5, 2008 for $500 a month with Riviera Beach Maritime Academy Corporation for the operation of a charter school on City owned land which was the site of the former Riviera Beach Elementary School at 251 West 11th Street (PCN: 56-43-42-33-06-030-0010) as a temporary location pending the acquisition and construction of a permanent school in Riviera Beach; and

WHEREAS, from August 2008 to November 2008, the Riviera Beach Maritime Academy operated on a month to month lease at $500 per month; and

WHEREAS, on November 5, 2008, the City Council, by Resolution No. 143-08, entered into a one year lease agreement (November 5, 2008 to October 5, 2009) (the lease agreement established in April 2006 expired and a new lease was created by the City) at $500 per month with Riviera Beach Maritime Academy Corporation for the continued operation of a charter school on the referenced City owned land; and

WHEREAS, from October 2009 to June 2011, the Riviera Beach Maritime Academy operated on a month to month lease at $500 per month; and

WHEREAS, on June 9, 2011, the City Council, by Resolution No. 86-11, executed a two-year lease amendment at $500 per month with Riviera Beach Maritime Academy Corporation extending the lease from June 15, 2011 until August 30, 2013 (1st Amendment); and

WHEREAS, on August 7, 2013, the City Council, by Resolution No. 101-13, entered into a two-year lease amendment at $500 per month with Riviera Beach Maritime Academy Corporation extending the lease from August 30, 2013 to August 30, 2015 (2nd Amendment); and

WHEREAS, the Riviera Beach Maritime Academy Corporation has leased the City owned property at 251 West 11th Street since 2006 and desires to extend the lease term at $500 per month for one additional year extending the lease from August 30, 2015 to August 30, 2016 (3rd Amendment).

NOW, THEREFORE, BE IT RESOLVED BY THE CITY COUNCIL OF THE CITY OF RIVIERA BEACH, PALM BEACH COUNTY, FLORIDA, AS FOLLOWS:

SECTION 1. The City Council hereby authorizes the Mayor and City Clerk to execute a Third Lease Agreement on behalf of the City of Riviera Beach with the Riviera Beach Maritime Academy, Corporation for an additional one year commencing August 30, 2015 until August 30, 2016 at $500 per month.

SECTION 2. This Resolution shall take effect immediately upon approval.

PASSED and APPROVED this 19TH day of AUGUST, 2015.

REMAINDER OF PAGE INTENTIONALLY LEFT BLANK

RESOLUTION NO. 112-15
PAGE 3 of 3

APPROVED:

THOMAS A. MASTERS
MAYOR

DAWN S. PARDO
CHAIRPERSON

ATTEST:

CLAUDENE L. ANTHONY
CERTIFIED MUNICIPAL CLERK
CITY CLERK

TERENCE D. DAVIS
CHAIR PRO TEM

BRUCE A. GUYTON
COUNCILPERSON

KaSHAMBA L. MILLER
COUNCILPERSON

CEDRICK A. THOMAS
COUNCILPERSON

MOTIONED BY: K. MILLER

SECONDED BY: T. DAVIS

D. PARDO	AYE
T. DAVIS	AYE
B. GUYTON	AYE
K. MILLER	NAY
C. THOMAS	ABSTAIN

REVIEWED AS TO LEGAL SUFFICIENCY

PAMALA HANNA RYAN, B.C.S.
CITY ATTORNEY

DATE: 8/19/15

BOUNDARY SURVEY
A PORTION OF PLAT OF OSCEOLA PARK
PLAT BOOK 2, PAGES 90 – 91
PALM BEACH COUNTY, FLORIDA.

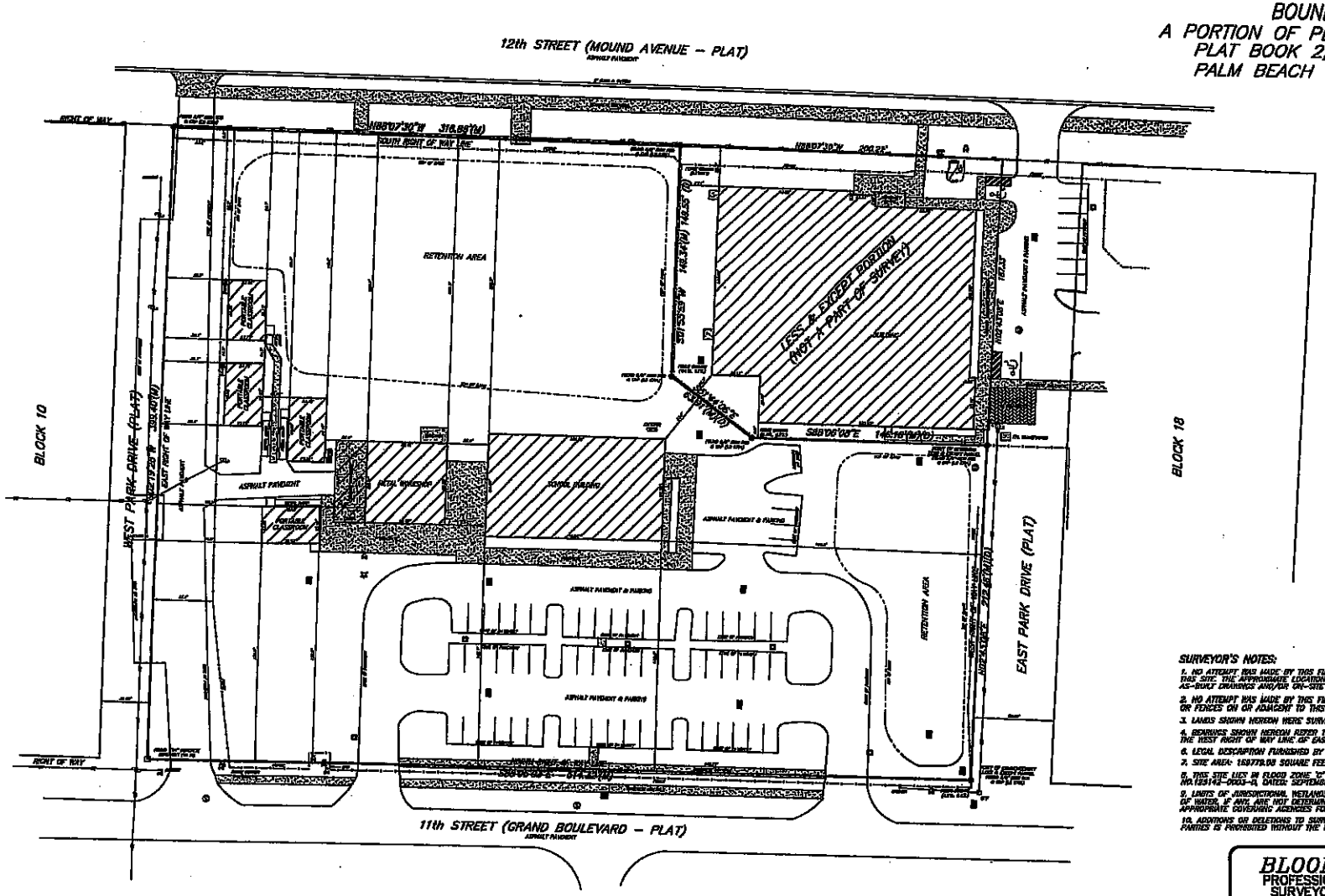

LEGAL DESCRIPTION:

A PART OF OSCEOLA PARK, AS SHOWN ON THE PLAT OF RIVIERA IN PLAT BOOK 2, PAGES 90 AND 91, OF THE PUBLIC RECORDS OF PALM BEACH COUNTY, FLORIDA, AND MORE PARTICULARLY DESCRIBED AS FOLLOWS:
BOUNDED ON THE NORTH BY THE SOUTH LINE OF MOUND AVENUE WHEN PRODUCED WEST TO CONNECT WITH THE BOUNDARY LINE OF WEST PARK DRIVE; BOUNDED ON THE EAST BY THE WEST BOUNDARY LINE OF EAST PARK DRIVE; BOUNDED ON THE WEST BY THE EAST BOUNDARY LINE OF WEST PARK DRIVE; BOUNDED BY THE SOUTH BY THE NORTH BOUNDARY LINE OF GRAND BOULEVARD, AS ALL OF SAID STREETS AND BOUNDARY LINES APPEAR IN RIVIERA, A SUBDIVISION IN THE TOWN OF RIVIERA, ACCORDING TO THE PLAT OF SAID SUBDIVISION ON FILE IN THE OFFICE OF THE CLERK OF THE CIRCUIT COURT OF PALM BEACH COUNTY, FLORIDA, IN PLAT BOOK 2, PAGES 90 AND 91.
LESS THEREFROM:
A PART OF OSCEOLA PARK, AS SHOWN ON THE PLAT OF RIVIERA IN PLAT BOOK 2, PAGES 90 AND 91, OF THE PUBLIC RECORDS OF PALM BEACH COUNTY, FLORIDA, AND MORE PARTICULARLY DESCRIBED AS FOLLOWS:
COMMENCING AT A POINT AT THE INTERSECTION OF THE NORTH RIGHT OF WAY OF GRAND BOULEVARD AND THE WEST RIGHT OF WAY OF EAST PARK DRIVE AS SHOWN ON THE PLAT OF RIVIERA IN PLAT BOOK 2, PAGES 90 AND 91 OF THE PUBLIC RECORDS OF PALM BEACH COUNTY, FLORIDA; THENCE NORTH 02°43'05" EAST ALONG THE WEST RIGHT OF WAY LINE OF EAST PARK DRIVE FOR A DISTANCE OF 312.05 FEET TO THE POINT OF BEGINNING; THENCE CONTINUED ALONG SAID RIGHT OF WAY NORTH 02°43'00" EAST, A DISTANCE OF 127.33 FEET; THENCE NORTH 88°03'53" WEST ALONG THE SOUTHERLY RIGHT OF WAY LINE OF 13th STREET (MOUND AVENUE PER PLAT) AS LAID OUT AND IN USE A DISTANCE OF 200.22 FEET; THENCE SOUTH 01°33'59" WEST, A DISTANCE OF 149.85 FEET; THENCE SOUTH 31°44'08" EAST, A DISTANCE OF 83.91 FEET; THENCE SOUTH 89°01'06" EAST, A DISTANCE OF 140.16 FEET TO THE POINT OF BEGINNING. SAID LANDS LYING IN THE CITY OF RIVIERA BEACH, FLORIDA. CONTAINING 3.90 ACRES, MORE OR LESS.

SURVEYOR'S NOTES:

1. NO ATTEMPT WAS MADE BY THIS FIRM TO LOCATE UNDERGROUND UTILITIES ON/OR ADJACENT TO THIS SITE. THE APPROXIMATE LOCATION OF ALL UTILITIES SHOWN HEREON WERE TAKEN FROM AS-BUILT DRAWINGS AND/OR ON-SITE LOCATION AND SHOULD BE VERIFIED BEFORE CONSTRUCTION
2. NO ATTEMPT WAS MADE BY THIS FIRM TO LOCATE UNDERGROUND FOOTINGS OF BUILDINGS OR FENCES ON OR ADJACENT TO THIS SITE.
3. LANDS SHOWN HEREON WERE SURVEYED WITHOUT BENEFIT OF TITLE SEARCH.
4. BEARINGS SHOWN HEREON REFER TO AN ASSUMED MERIDIAN OF N02°43'05"E. ALONG THE WEST RIGHT OF WAY LINE OF EAST PARK DRIVE.
5. LEGAL DESCRIPTION FURNISHED BY CLIENT.
7. SITE AREA: 169778.00 SQUARE FEET OR 3.90 ACRES MORE OR LESS.
8. THIS SITE LIES IN FLOOD ZONE "X" AS SCALED AND INTERPOLATED FROM FEMA MAP PANEL NO 12314C-0063-A, DATED SEPTEMBER 3rd, 1992.
9. LIMITS OF JURISDICTIONAL WETLANDS, DITCHES, DRAINAGE WAYS, WATER FLOWS, AND/OR BODIES OF WATER, IF ANY, ARE NOT DETERMINED BY THIS SURVEY. CLIENT IS ADVISED TO CONTACT APPROPRIATE GOVERNING AGENCIES FOR POSSIBLE LIMITS OF JURISDICTION.
10. ADDITIONS OR DELETIONS TO SURVEY MAPS OR REPORTS BY OTHER THAN THE SIGNING PARTY OR PARTIES IS PROHIBITED WITHOUT THE WRITTEN CONSENT OF THE SIGNING PARTY OR PARTIES.

LEGEND & ABBREVIATIONS

- FIRE DEPARTMENT CONNECTION
- BOND PAPER FACE
- BARBED SCREW ANCHOR
- LIGHT POLE with CONCRETE BASE
- GALED VALVE
- FIRE HYDRANT
- CATCH BASIN
- STORM MANHOLE
- MANHOLE PROJECTED MONE
- FLORIDA POWER & LIGHT
- ELECTRICAL SERVICE
- WATER METER

GRAPHIC SCALE

(IN FEET)
1 inch = 50 ft.

SURVEYOR'S CERTIFICATION:

SURVEY MAP AND REPORT OR THE COPIES THEREOF ARE NOT VALID WITHOUT THE SIGNATURE AND THE ORIGINAL RAISED SEAL OF A LICENSED FLORIDA SURVEYOR AND MAPPER.

ROBERT BLOOMSTER JR.
PROFESSIONAL LAND SURVEYOR
NO. 4134 STATE OF FLORIDA

BLOOMSTER
PROFESSIONAL LAND SURVEYORS, INC.
L.B. #3018

641 NORTHEAST SPENCER STREET
JENSEN BEACH, FLORIDA 34957
PHONE 772-334-0868

SHEET 1 OF 1

DRAWN BY	DBM
SCALE	1" = 50'
FIELD WORK COMPLETED DATE	
FIELD BOOK	SECTION
JOB NO.	11084

REVISIONS

DATE	DESCRIPTION	BY

MARITIME ACADEMY
23013 SANDALFOOT PLAZA
BOCA RATON, PALM BEACH COUNTY, FLORIDA

Exhibit B

Preliminary Site Plan

The community of Riviera Beach is currently comprised of 8,122 people under the age of 18.[1] While the City has several fine schools, with a number of youth this high another venue for education is necessary and will help to provide more individualized and personalized teaching to the students. The RBMA is poised to continue to provide education to the City of Riviera Beach and its surrounding areas with this brand new, twenty-eight thousand square foot classroom building. The expansion will allow the RBMA to enroll significantly more students to the program and provide a significantly higher class of education to all current and future students. As an added benefit, the design of the school and its façade will complement the area and existing school facilities giving it a purposeful, but aesthetically pleasing appeal. Though no amenities other than the school are planned, RBMAC will deepen and expand retention areas on the property.

What follows below and in the corresponding addenda to this Tab are the relevant site plans, design work, engineering, and architectural schematics necessary to complete this expansion and to demonstrate the full scope and scale of the proposed school.

Presentation Drawings:

1. Aerial overlay of expansion footprint and new retention areas.
2. First and Second floor plans
3. Visual depiction of the North Elevation of the expansion
4. Visual depiction of the East Elevation of the expansion
5. Visual depiction of the South Elevation of the expansion
6. Visual depiction of the West Elevation of the expansion
7. Topographic Survey of the premises
8. Landscape plan
9. Irrigation plan
10. Architectural Schematics and Interior Design plans
11. Demolition plan
12. Civil Engineering drawings
13. Site demolition and erosion control plan
14. Signing, striping, and geometric plan
15. Paving, grading, and drainage plan
16. Potable water and sanitary sewer plan
17. Electrical plan
18. Light fixture plan
19. Fire alarm plan
20. Electric panelboard drawings
21. Fire sprinkler plan
22. Parking and gate drawings
23. Life safety plan
24. Mechanical plans
25. Plumbing plans
26. Structural plans

[1] According to the 2010 Census; information available here http://quickfacts.census.gov/qfd/states/12/1260975.html.

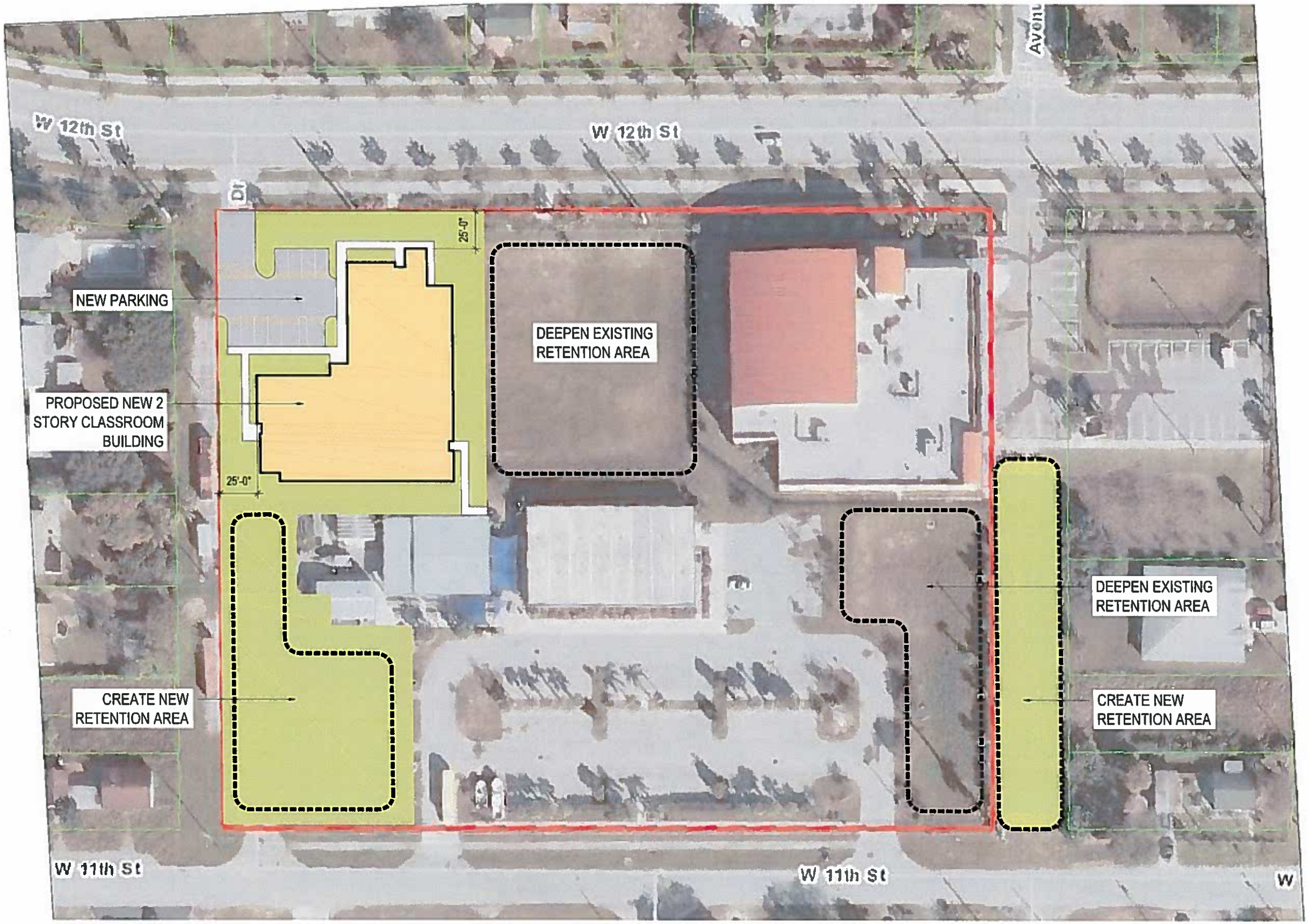

01 CONCEPT SITE PLAN

SCALE: 1"=30'-0"

tercilla courtemanche architects
AA 0003414
2017 vista parkway, suite 100
west palm beach, florida 33411 ph: 561.478.4457 fx: 561.478.4102

NEW CLASSROOM BUILDING
RIVIERA BEACH MARITIME ACADEMY
RIVIERA BEACH, FLORIDA

commission	X
date:	4-7-14
revision	date
no. △	
△	
△	
△	
△	
△	
△	
△	

drawing G1

copyright 2014
THE CONTENTS OF THESE DOCUMENTS, INCLUSIVE OF THE DESIGN ARE COPYRIGHTED AND PROPRIETARY. THE ARCHITECT SHALL USE ALL LEGAL AVENUES AVAILABLE TO PROTECT SAID COPYRIGHT. ANY USE NOT AUTHORIZED IN WRITING BY THE ARCHITECT IS PROHIBITED.

René Tercilla AIA, REFP

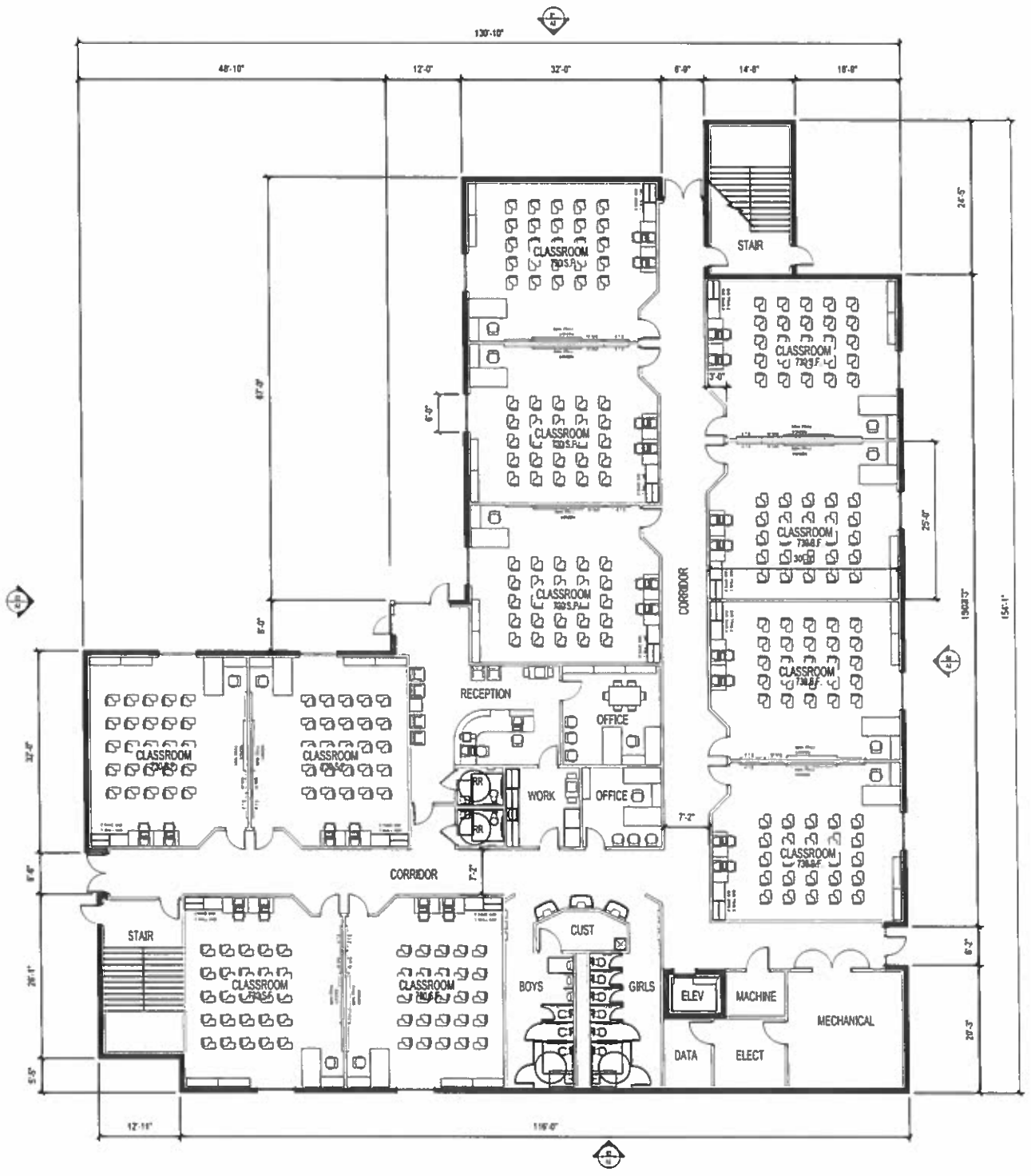

1st FLOOR PLAN

SCALE 3/32"=1'-0"

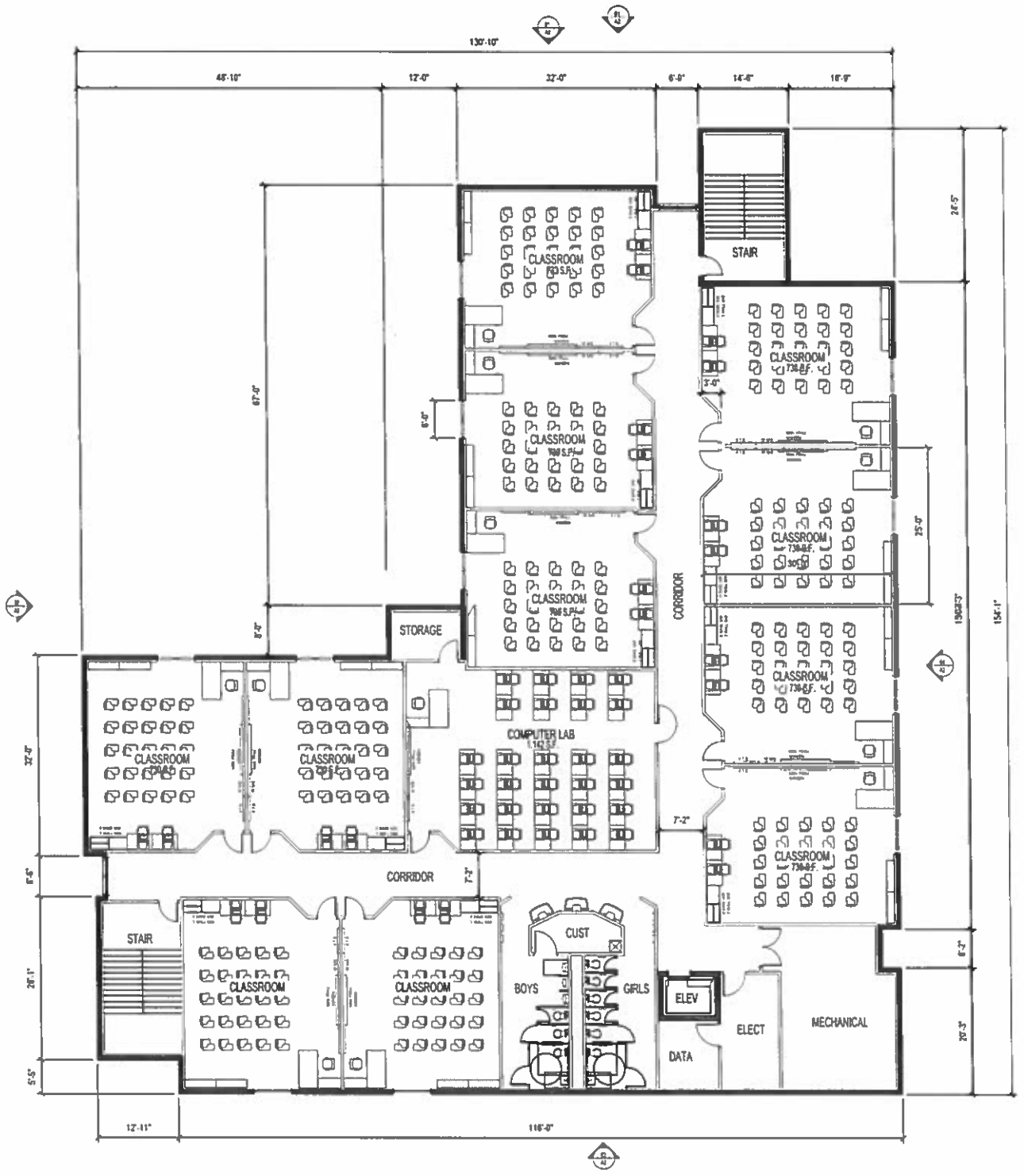

2nd FLOOR PLAN

SCALE 3/32"=1'-0"

AREA TABULATION

1ST FLOOR = 14,190 GSF
2ND FLOOR = 13,432 GSF
TOTAL GSF = 27,622 GSF

tercilla courtemanche architects
AA 0003111
2017 vista parkway, suite 100
west palm beach, florida 33411 ph: 561.478.1457 fx: 561.478.1102

NEW CLASSROOM BUILDING
RIVIERA BEACH
MARITIME ACADEMY
RIVIERA BEACH, FLORIDA

commission	X
date:	4-7-14
revision	date
no.	

drawing

A1

copyright 2014

THE CONTENTS OF THESE DOCUMENTS, INCLUSIVE OF THE DESIGN ARE COPYRIGHTED AND PROPRIETARY. THE ARCHITECT SHALL USE ALL LEGAL MEANS AVAILABLE TO PROTECT SAID COPYRIGHT. ANY USE NOT AUTHORIZED IN WRITING BY THE ARCHITECT IS PROHIBITED

René Tercilla AIA, REFP

tercilla *courtemanche* architects, inc.

The Weitz Company

North Elevation

tercilla *courtemanche* architects, inc.

The Weitz Company

East Elevation

tercilla *courtemanche* architects, inc.

The Weitz Company

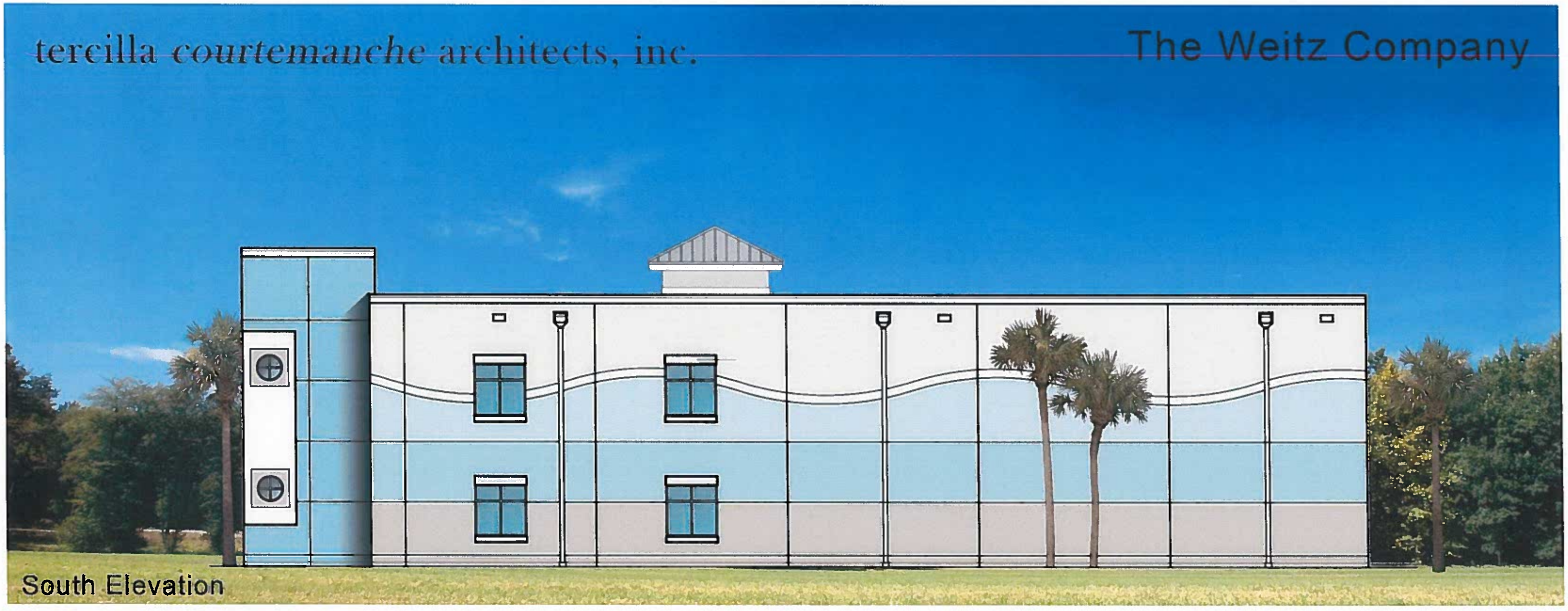

South Elevation

tercilla *courtemanche* architects, inc.

The Weitz Company

West Elevation

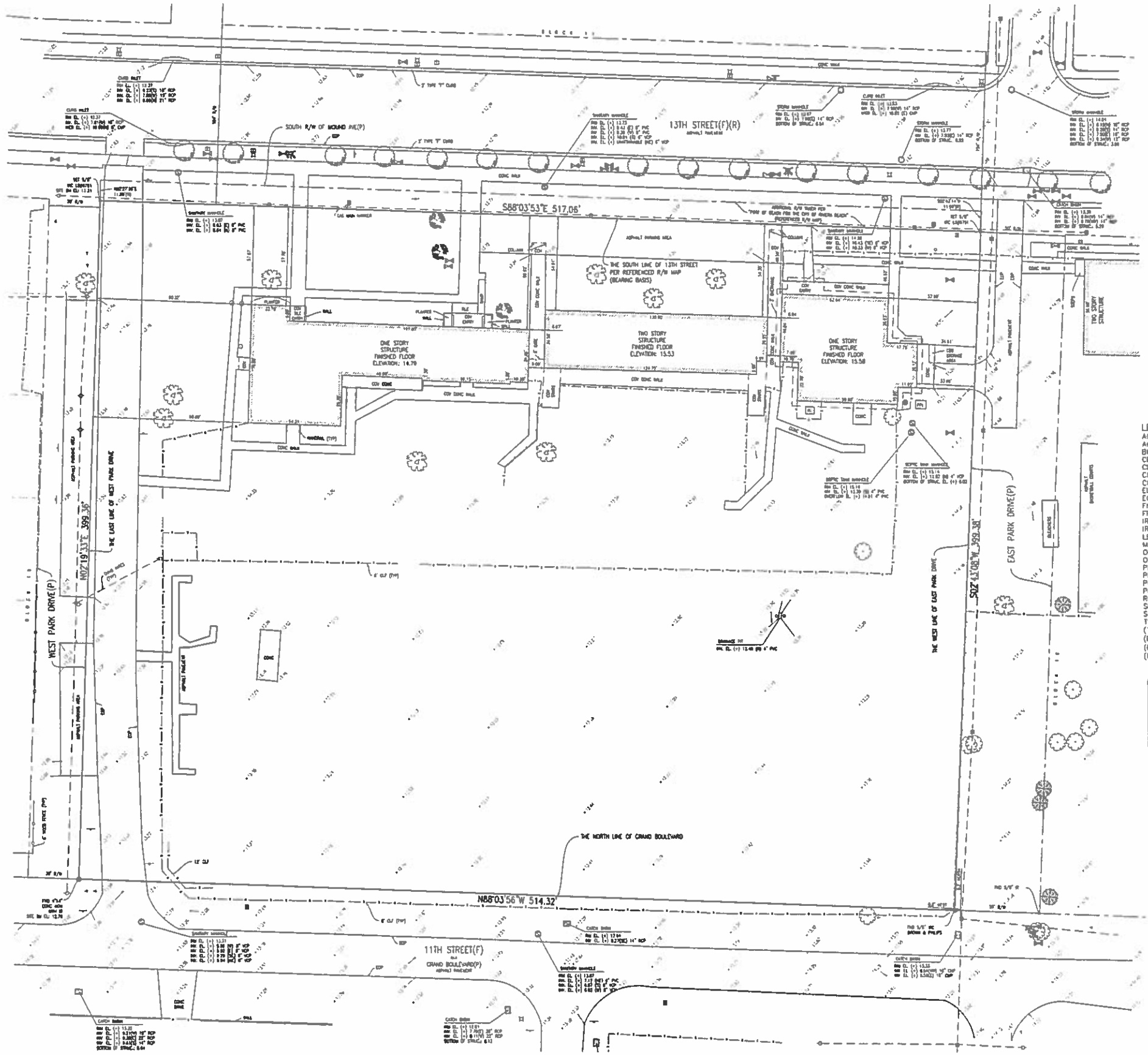

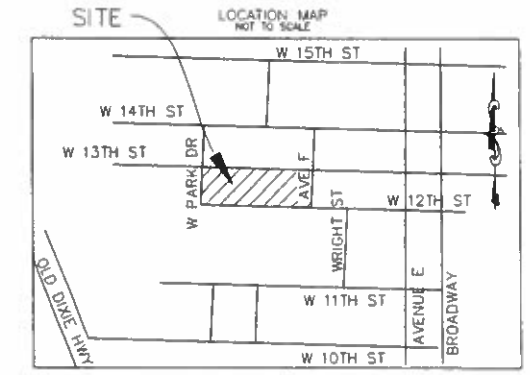

REFERENCE DRAWINGS:
1 RIGHT-OF-WAY MAP: PORT OF PALM BEACH
FOR THE CITY OF RIVIERA BEACH
- WEST 13TH STREET, AVENUE "C" AND
WEST 11TH STREET
SFRN NUMBER PROJECT NUMBER: 00022
DRAWING NO. 00022CVR.DWG

FLOOD ZONE INFORMATION
Community Name: RIVIERA BEACH
Community Number: 125142
County Name: Palm Beach County
State: Florida Map & Panel Number: 0003
Suffix: D
F.I.R.M. Index Date: September 30, 1983
Flood Zone: C

CERTIFIED TO:
VIKING ASSOCIATES

(IN FEET)
1 inch = 30 ft.

LEGEND

AC	AIR CONDITIONER
AKA	ALSO KNOWN AS
BM	BENCHMARK
CBS	CONCRETE BLOCK
CLF	CHAIN LINK FENCE
CONC	CONCRETE
COV	COVERED
EL	ELEVATION
EOP	EDGE OF PAVEMENT
FND	FOUND
FPL	FLORIDA POWER AND LIGHT
IR	IRON ROD
IRC	IRON ROD AND CAP
LB	LICENSED BUSINESS
MON	MONUMENT
ORB	OFFICIAL RECORDED DOCUMENT
OVHD	OVERHEAD WIRE
PB	PLAT BOOK
PBC	PALM BEACH COUNTY
PG	PAGE
PK	PARKER KALON NAIL
RNG	RANGE
SEC	SECTION
ST	STREET
TWP	TOWNSHIP
(TYP)	TYPICAL
(P)	PER PLAT
(F)	FIELD ACQUIRED
(R)	PER REFERENCED RIGHT-OF-WAY MAP

SYMBOL LEGEND

SYMBOL	DESCRIPTION
	BOLLARD
	WOOD POWER POLE
	CONCRETE POLE
	LIGHT POLE
	GUY ANCHOR
	MISCELLANEOUS SIGN
	WATER VALVE
	GATE VALVE
	IRRIGATION VALVE
	CONTROL VALVE
	SANITARY MANHOLE
	FIRE HYDRANT
	CONCRETE GUIDE POLE
	WATER METER
	CATCH BASIN
	ELECTRIC HANDHOLE
	TRAFFIC HANDHOLE
	SANITARY CLEANOUT
	WELL
	STORM MANHOLE
	CHAINLINK FENCE

SURVEYOR'S NOTES:

1 NOT VALID UNLESS SIGNED AND EMBOSSED WITH A SURVEYOR'S SEAL.

2. THIS SURVEY, AS SHOWN HEREON, HAS BEEN PREPARED FOR THE EXCLUSIVE BENEFIT AND USE OF THE CLIENT NAMED HEREON, AND IS NOT INTENDED FOR ANY REUSE WITHOUT THE WRITTEN CONSENT BY THIS SURVEYOR OF RECORD.

3. LANDS SHOWN HEREON WERE NOT ABSTRACTED, BY THE SURVEYOR, FOR RIGHT-OF-WAY, EASEMENTS, OWNERSHIP OR OTHER INSTRUMENTS OF RECORD.

4. THE SUBJECT PROPERTY, AS SHOWN HEREON, MAY BE SUBJECT TO ANY EXISTING RIGHT-OF-WAY, RESTRICTIONS, AND SETBACK LINES WHETHER OR NOT THEY MAY BE SHOWN HEREON, OR WHETHER OR NOT INSTRUMENT IS RECORDED IN THE PUBLIC RECORDS.

5. UNLESS OTHERWISE NOTED, THIS FIRM HAS NOT ATTEMPTED TO LOCATE UNDERGROUND UTILITIES, FOOTINGS AND/OR FOUNDATIONS.

6. NO SEARCH OF THE PUBLIC RECORDS WAS PERFORMED BY THIS OFFICE.

7. BEARINGS SHOWN HEREON ARE BASED UPON THE SOUTH RIGHT-OF-WAY LINE OF 13TH STREET AS SHOWN ON REFERENCED RIGHT-OF-WAY MAP, SAID LINE HAVING A BEARING OF S88°03'53"E, AND ALL OTHER BEARINGS SHOWN HEREON ARE RELATIVE THERETO.

8. THE LEGAL DESCRIPTION SHOWN HEREON WAS PROVIDED BY THE CLIENT, AND WITHOUT THE BENEFIT OF THE TITLE REPORT.

9. ELEVATION SHOWN HEREON ARE BASED ON THE NATIONAL GEODETIC VERTICAL DATUM (N.G.V.D.) OF 1929. REFERENCE PALM BEACH COUNTY PUBLISHED BENCHMARK "REDEYE", EL.=7.281 FEET.
MONUMENT TYPE: PALM BEACH COUNTY BRASS DISK IN CONCRETE MONUMENT.
DESCRIPTION: TO REACH THE STATION FROM THE INTERSECTION OF US-1 (BROADWAY) AND 59TH STREET, GO EAST ON 59TH STREET FOR 0.2 MILE TO DIXIE HIGHWAY. THE STATION IS AT THE SOUTHEAST CORNER OF THE INTERSECTION OF 59TH STREET AND DIXIE HIGHWAY.
THE STATION IS A PALM BEACH COUNTY BRASS DISK IN A ROUND CONCRETE MONUMENT STAMPED "REDEYE". THE STATION IS LOCATED 18.58 FEET SOUTHWEST OF AN X-CUT 2.5 FEET UP THE SOUTHEAST CORNER OF A CONCRETE POLE, 10.59 FEET NORTHWEST OF AN X-CUT SET ON TOP OF THE EASTERN CONCRETE CURB FOR DIXIE HIGHWAY, AND 51.05 FEET SOUTHEAST OF A POWER POLE

LEGAL DESCRIPTION:

A PART OF OSCEOLA PARK, AS SHOWN ON THE PLAT OF RIVIERA IN PLAT BOOK 2, PAGES 90 AND 91, OF THE PUBLIC RECORDS OF PALM BEACH COUNTY, FLORIDA, AND MORE PARTICULARLY DESCRIBED AS FOLLOWS:

BOUNDED ON THE NORTH BY THE SOUTH LINE OF MOUND AVENUE WHEN PRODUCED WEST TO CONNECT WITH THE EAST BOUNDARY LINE OF WEST PARK DRIVE; BOUNDED ON THE EAST BY THE WEST BOUNDARY LINE OF EAST PARK DRIVE; BOUNDED ON THE WEST BY THE EAST BOUNDARY LINE OF WEST PARK DRIVE; BOUNDED ON THE SOUTH BY THE NORTH BOUNDARY LINE OF GRAND BOULEVARD WHEN PRODUCED WEST ACROSS PARK DRIVE; AS ALL OF SAID STREETS AND BOUNDARY LINES APPEAR IN RIVIERA, A SUBDIVISION IN THE TOWN OF RIVIERA, ACCORDING TO THE PLAT OF SAID SUBDIVISION ON FILE IN THE OFFICE OF THE CLERK OF THE CIRCUIT COURT OF PALM BEACH COUNTY, FLORIDA, IN PLAT BOOK 2, PAGES 90 AND 91

TOTAL CONTAINING: 4.728 ACRES MORE OR LESS

SURVEYOR'S CERTIFICATE

I HEREBY CERTIFY THAT THIS "SKETCH OF BOUNDARY SURVEY" OF THE PROPERTY DESCRIBED HEREON IS TRUE AND CORRECT TO THE BEST OF MY KNOWLEDGE AND BELIEF AS RECENTLY SURVEYED AND DRAWN UNDER MY SUPERVISION. THIS SKETCH COMPLIES WITH THE MINIMUM TECHNICAL STANDARDS SET FORTH BY THE FLORIDA STATE BOARD OF PROFESSIONAL SURVEYORS AND MAPPERS IN CHAPTER 61G17-6, FLORIDA ADMINISTRATIVE CODE PURSUANT TO 472.027 FLORIDA STATUTES.

CALVIN, GIORDANO & ASSOCIATES, INC.

Signed _____ Dated Signed: _____

RONNIE L. FURNISS
Professional Surveyor and Mapper No. 6272
State of Florida

LAST DATE OF FIELDWORK: 03-29-06 FIELD BOOK/PAGE: P-42/4-34

NO	DATE	REVISION	BY	NO	DATE	REVISION	BY

DESIGNED
DATE
DRAWN C.T.V.
DATE 03-27-06
CHECKED R.L.F.
DATE 03-30-06

Calvin, Giordano & Associates, Inc.
Engineers Surveyors Planners
560 Village Boulevard, Suite 240
West Palm Beach, Florida 33409
Phone: 561 684 8181 Fax 561 684 8360
CERTIFICATE OF AUTHORIZATION NO. LB 6791

VIKING ASSOCIATES

PROPOSED VIKING MARITIME SCHOOL SITE
RIVIERA BEACH, FLORIDA
BOUNDARY/TOPO SURVEY

APPROVED
DATE

SCALE 1" = 30'
PROJECT No 05-3017.3
CAD FILE
SHEET 1/1
OF

Z:\2005\05-3017 Viking Marine\SURVEY\SKETCH\05-3017-V-BS.dwg 2/20/2006 9:21:02 AM EST

NEW CLASSROOM BUILDING

RIVIERA BEACH MARITIME ACADEMY

RIVIERA BEACH, FLORIDA

ARCHITECT'S PROJECT NO. 214031.00

ARCHITECT OF RECORD:
HARVARD JOLLY ARCHITECTURE
2047 VISTA PARKWAY, SUITE 100 WEST
PALM BEACH, FL 33411 PHONE:
561-478-4457 FAX: 561-478-4102

MECHANICAL ELECTRICAL PLUMBING & FIRE ENGINEER:
RGD CONSULTING ENGINEERS
1003 JUPITER PARK LANE SUITE #2
JUPITER, FLORIDA 33458 PHONE:
561-743-0165 FAX: 561-743-0193

CIVIL ENGINEER:
CIVIL DESIGN , INC.
312 9th STREET WEST PALM BEACH,
FLORIDA 33401 PHONE: 561-659-5760
FAX: 561-659-5772

LANDSCAPE ARCHITECT:
Conceptual Design Group, Inc.
900 EAST OCEAN BOULEVARD, SUITE 130D
STUART, FLORIDA 34994
(561) 371-1644

GENERAL CONTRACTOR:
THE WEITZ COMPANY
1720 CENTREPARK DRIVE EAST
WEST PALM BEACH, FL 33401
P: 561-687-4816 F: 561-681-3316

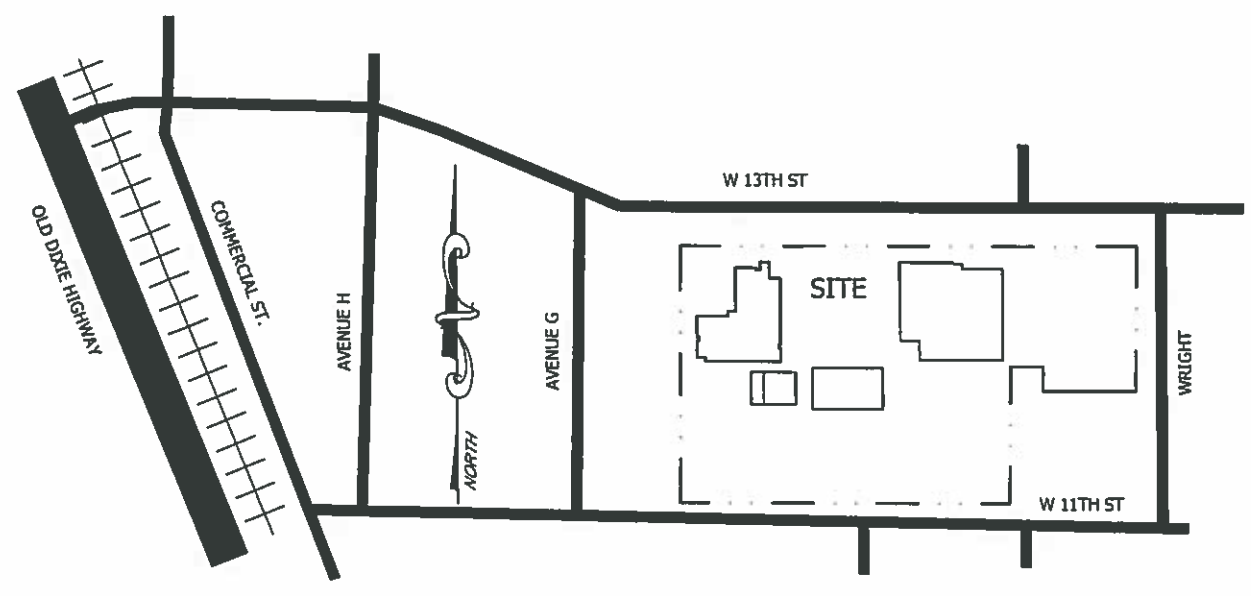

SITE LOCATION MAP
N.T.S.

HARVARD•JOLLY
ARCHITECTURE
Ft. Lauderdale 954-486-7910
Ft. Myers 239-275-7774
Jacksonville 904-355-3300
Orlando 407-777-7700
Ponte Gorda 941-575-0403
St. Petersburg 727-866-4611
Tampa 813-228-0075
West Palm Beach 561-478-4457
AAC000319
www.Harvardjolly.com
WEST PALM BEACH, FL

NEW CLASSROOM BUILDING
RIVIERA BEACH MARITIME ACADEMY
RIVIERA BEACH, FLORIDA
CONTRUCTION DOCUEMENTS

Comm. No:	214031.00
Date:	09-24-14
Drawn:	
Revised:	

copyright 2014

René Tercilla AIA, REFP

COV.1

P:\TD\12 DD\pb\COV 1.dwg, 9/25/2014 1:52:21 PM

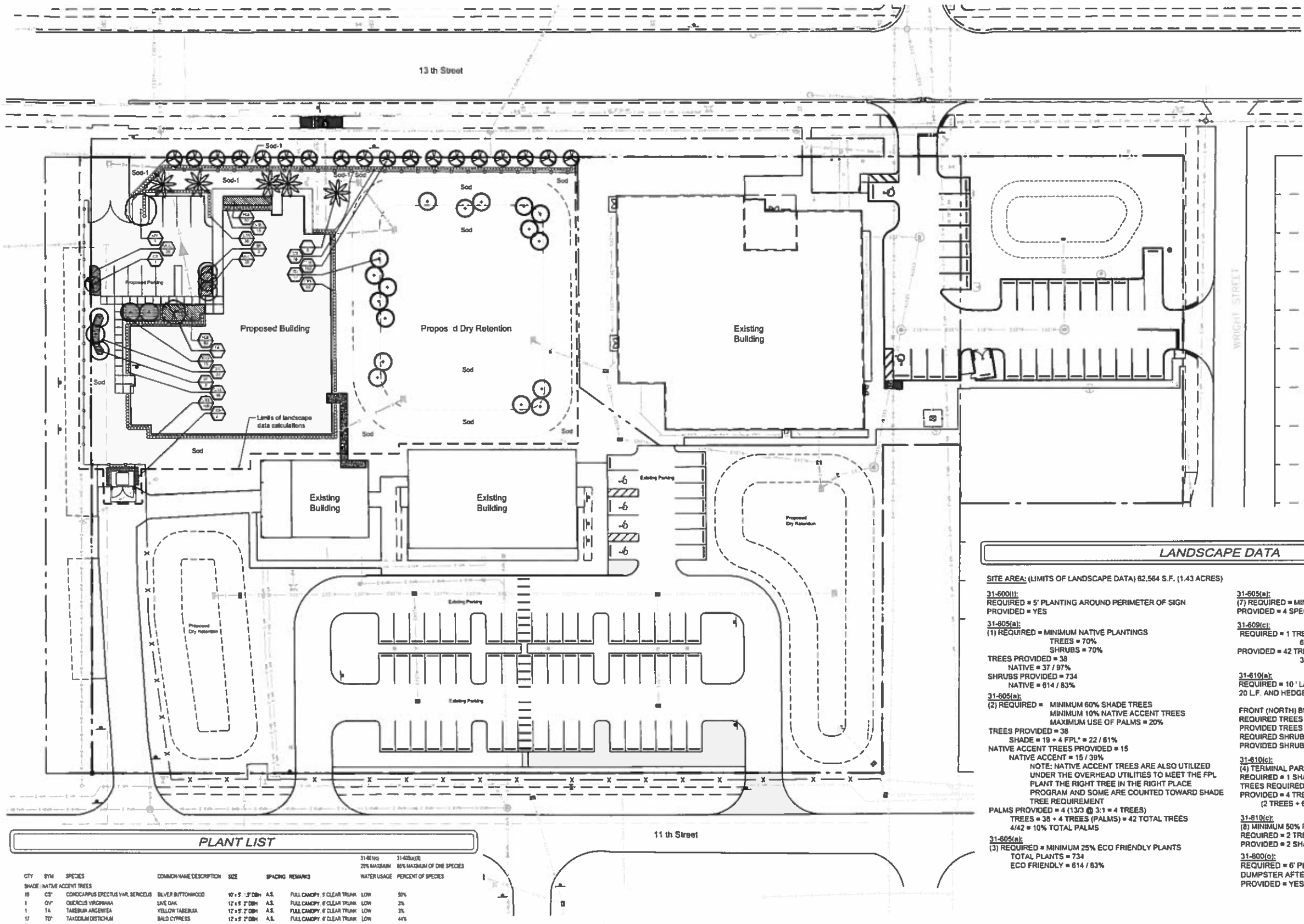

PLANT LIST

CTY	SYM	SPECIES	COMMON NAME/DESCRIPTION	SIZE	SPACING	REMARKS	WATER USAGE	31-601(c) 20% MAXIMUM / 31-605(e)(8) 80% MAXIMUM OF ONE SPECIES PERCENT OF SPECIES
SHADE / NATIVE ACCENT TREES								
19	CS*	CONOCARPUS ERECTUS VAR. SERICEUS	SILVER BUTTONWOOD	10' x 5' - 3" DBH	A.S.	FULL CANOPY, 5' CLEAR TRUNK	LOW	50%
1	QV*	QUERCUS VIRGINIANA	LIVE OAK	12' x 5', 2" DBH	A.S.	FULL CANOPY, 6' CLEAR TRUNK	LOW	3%
1	TA	TABEBUIA ARGENTEA	YELLOW TABEBUIA	12' x 5', 2" DBH	A.S.	FULL CANOPY, 6' CLEAR TRUNK	LOW	3%
17	TD*	TAXODIUM DISTICHUM	BALD CYPRESS	12' x 5', 2" DBH	A.S.	FULL CANOPY, 6' CLEAR TRUNK	LOW	44%
PALMS								
8	RE*	ROYSTONEA ELATA	FLORIDA ROYAL PALM	12' C.T.	A.S.	MATCHED	LOW	
8	SP*	SABAL PALMETTO	SABAL PALM	SEE PLAN	A.S.	SLICK TRUNKS	LOW	
SHRUBS / GROUND COVERS								
243	CES*	CONOCARPUS ERECTUS VAR. SERICEUS	SILVER BUTTONWOOD	#3, 2' x 2'	2' O.C.	FULL & THICK	LOW	
21	CES-1*	CONOCARPUS ERECTUS VAR. SERICEUS	SILVER BUTTONWOOD	#1, 4' x 2'	2' O.C.	FULL & THICK	LOW	
158	CHI*	CHRYSOBALANUS ICACO	COCOPLUM	#3, 2' x 2'	2' O.C.	FULL & THICK	LOW	
138	FCI	FICUS MICROCARPA 'GREEN ISLAND'	FICUS GREEN ISLAND	#3, 12" x 18"	2' O.C.	FULL & THICK	LOW	
70	MUC*	MUHLENBERGIA CAPILLARIS	MUHLY GRASS	#3, 2' x 2'	2' O.C.	FULL & THICK	LOW	
105	NEB*	NEPHROLEPIS EXALTATA	BOSTON FERN	6", 12" x 12"	2' O.C.	FULL & THICK	LOW	
168	TCD*	TRIPSACUM DACTYLOIDES DWARF	DWARF FAKAHATCHEE GRASS	#3, 2' x 2'	2' O.C.	FULL & THICK	LOW	
15	VIS	VIBURNUM SUSPENSUM	SANDANKWA VIBURNUM	#3, 2' x 2'	2' O.C.	FULL & THICK	LOW	
	SOD	PASPALUM NOTATUM	BAHIA SOD	SEE SPECS			LOW	
	SOD-1	STENOTAPHRUM SECUNDATUS	ST. AUGUSTINE SOD	SEE SPECS			MEDIUM - HIGH	

* = FLORIDA NATIVE

LANDSCAPE DATA

SITE AREA: (LIMITS OF LANDSCAPE DATA) 62,564 S.F. (1.43 ACRES)

31-600(i):
REQUIRED = 5' PLANTING AROUND PERIMETER OF SIGN
PROVIDED = YES

31-605(a):
(1) REQUIRED = MINIMUM NATIVE PLANTINGS
TREES = 70%
SHRUBS = 70%
TREES PROVIDED = 38
NATIVE = 37 / 97%
SHRUBS PROVIDED = 734
NATIVE = 614 / 83%

31-605(a):
(2) REQUIRED = MINIMUM 60% SHADE TREES
MINIMUM 10% NATIVE ACCENT TREES
MAXIMUM USE OF PALMS = 20%
TREES PROVIDED = 38
SHADE = 19 + 4 FPL* = 22 / 61%
NATIVE ACCENT TREES PROVIDED = 15
NATIVE ACCENT = 15 / 39%
NOTE: NATIVE ACCENT TREES ARE ALSO UTILIZED UNDER THE OVERHEAD UTILITIES TO MEET THE FPL PLANT THE RIGHT TREE IN THE RIGHT PLACE PROGRAM AND SOME ARE COUNTED TOWARD SHADE TREE REQUIREMENT
PALMS PROVIDED = 4 (13/3 @ 3:1 = 4 TREES)
TREES = 38 + 4 TREES (PALMS) = 42 TOTAL TREES
4/42 = 10% TOTAL PALMS

31-605(a):
(3) REQUIRED = MINIMUM 25% ECO FRIENDLY PLANTS
TOTAL PLANTS = 734
ECO FRIENDLY = 614 / 83%

31-605(e):
(7) REQUIRED = MINIMUM SHADE TREE SPECIES (31-50) = 4
PROVIDED = 4 SPECIES

31-609(c):
REQUIRED = 1 TREE / 1,500 S.F. OF SITE AREA
62,564 S.F. / 1,500 S.F. = 42 TREES
PROVIDED = 42 TREES
38 TREES + 4 PALMS (@ 3:1) = 42 TREES

31-610(a):
REQUIRED = 10 ' LANDSCAPE STRIP WITH 1 TREE / 20 L.F. AND HEDGE AT 2' O.C.

FRONT (NORTH) BUFFER = 317.22'
REQUIRED TREES = 317.22 / 20 = 16
PROVIDED TREES = 18 (FPL TREES)
REQUIRED SHRUBS = 317.22 / 2 = 159
PROVIDED SHRUBS = 185

31-610(c):
(4) TERMINAL PARKING LOT ISLANDS
REQUIRED = 1 SHADE TREE PER ISLAND
TREES REQUIRED = 4 ISLANDS = 4 TREES
PROVIDED = 4 TREES
(2 TREES + 6 PALMS @ 3:1 = 4 TREES)

31-610(c):
(8) MINIMUM 50% PARKING LOT SHADE TREES
REQUIRED = 2 TREES (4 TERMINAL ISLANDS)
PROVIDED = 2 SHADE TREES / 50%

31-600(o):
REQUIRED = 6' PLANTING AROUND PERIMETER OF DUMPSTER AFTER ONE YEAR
PROVIDED = YES

LANDSCAPE PLAN

15' 30' 60' 90' 120'
SCALE 1" = 30'

Conceptual Design Group, Inc.
Landscape Architecture - Site Planning
900 East Ocean Boulevard, Suite 130d
Stuart, Florida 34994
(772) 344-2340
LC: 26000198

These drawings are the property of the landscape architect and are not to be used for other projects except by written permission from the landscape architect. Report any discrepancies immediately to the landscape architect.

LAND DEVELOPERS
Urban Planning . Engineering
Landscape Architecture
500 Australian Avenue, Suite 518
West Palm Beach, Florida 33401
Office: 561-832-1653
Fax: 561-683-1574

Riviera Beach Maritime Academy Addition
City of Riviera, Florida

DESIGNED	JWS
DATE	9-9-2014
REVISIONS	

SCALE · 1" = 30'

SHEET 1 OF 2

Landscape Details

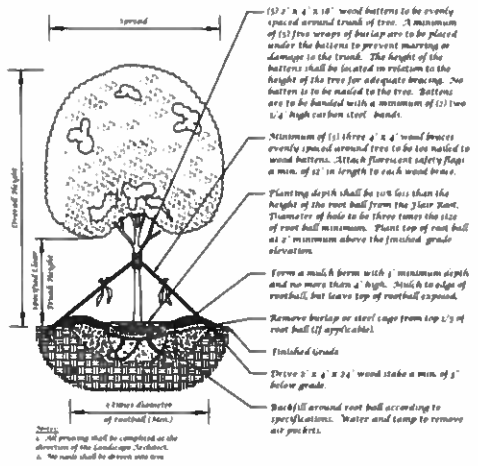

Large Tree Planting Detail (5" Caliper or Greater)

Not to Scale

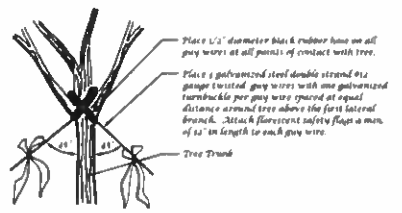

Guy Wire Attachment Detail

Not to Scale

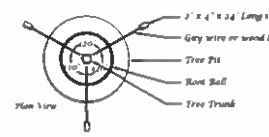

Staking Detail

Not to Scale

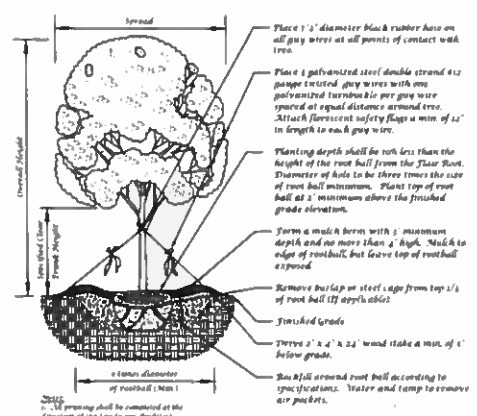

Tree Planting Detail

Not to Scale

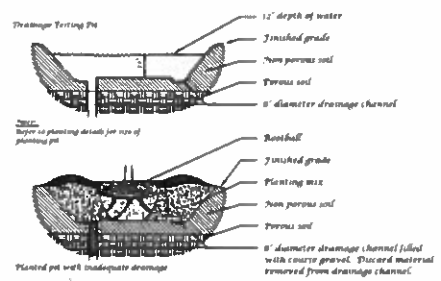

Drainage Testing Detail

Not to Scale

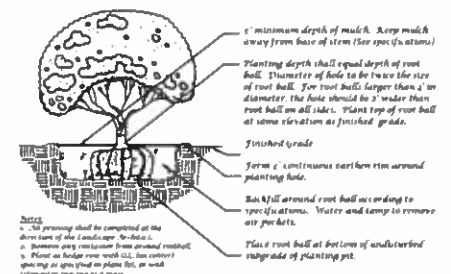

Shrub Detail

Not to Scale

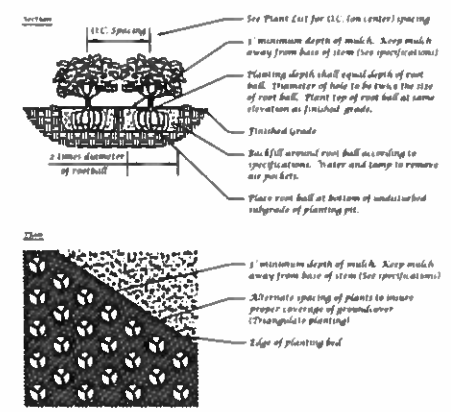

Ground Cover Detail

Not to Scale

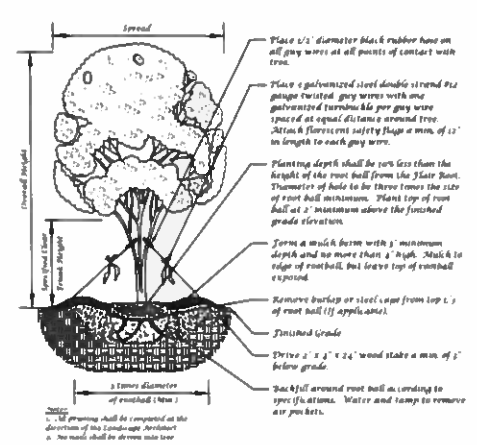

Multi-Trunk Tree Planting Detail

Not to Scale

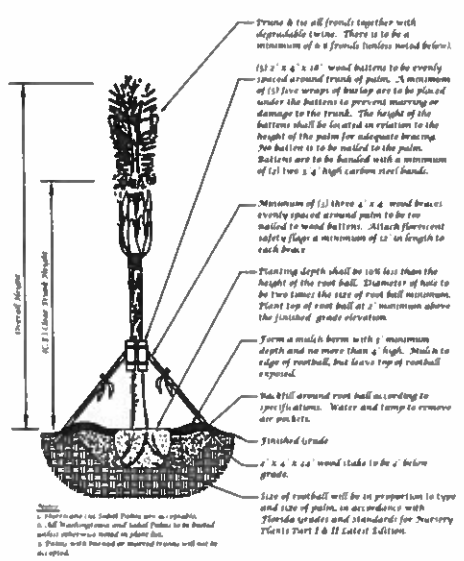

Palm Planting Detail

Not to Scale

Landscape Specifications

1. All tree and plant material to be Florida No. 1 or better, as classified in "Grades and Standards for Nursery Plants", Part 1 and Part II, State of Florida, Dept. of Agriculture, Tallahassee. All plants not listed in "Grades and Standards for Nursery Plants" shall conform to a Florida No. 1 as to: (1) health and vitality, (2) condition of foliage, (3) root system, (4) freedom from pest or mechanical damage, (5) heavily branched and densely foliated according to the accepted normal shape of the species.
2. Undersizing or substitution of one species or cultivar for another species is a breach of contract and will be "Rejected" at the time of final landscape inspection unless approved by Landscape Architect.
3. Project Warranty: All plant material shall be warranted for a period of one (1) year after date of substantial completion against defects, including death and unsatisfactory growth, except for defects resulting from abuse or damage by others or unusual phenomena or incidents which are beyond the contractor's control.
4. Any and all conditions which the contractor feels will be detrimental to the success of the planting shall be brought to the owner or representative's attention.
5. The contractor shall verify the location of underground utilities prior to commencing work on any project area.
6. Mulch planting areas with 3" layer of Melaleuca, Eucalyptus, or Environmulch. Cypress Mulch is NOT ACCEPTABLE. Planting beds to receive mulch throughout entire bed area.
7. All plants to be set to ultimate grade. No filling will be permitted around trunks or stems. Mulch is to kept a minimum of 2" away from trunks and stems.
8. Planting trees and shrubs: Excavate hole per planting detail. When plant is set, place additional backfill consisting of a 50% mixture of Peat humus and natural soil around the base and sides of ball, and work each layer to settle backfill and eliminate voids and air pockets. When excavation is approximately 2/3 full, water thoroughly before placing remainder of backfill. Water again after placing final layer of backfill and before installing mulch.
9. Guy and stake trees in 3 directions with galvanized wire, through flexible hose chafing guards, with wooden stake anchors. Immediately after planting. (See Detail)
10. Trees and shrubs shall be fertilized with a complete natural organic fertilizer with a rate of approximately 3:12 or 2:12 (e.g. one labeled 12-4-8). Similar analysis such as 16-4-8 (4:12) can also be used. Fertilizers that are slow release, controlled release, sulphur coated or with nitrogen as IBDU or urea-formaldehyde have extended release period. Thirty to fifty percent of the nitrogen should be water insoluble or slow release.

Palms should receive a complete granular fertilizer formulated for palms ("Palm Special") at a rate of 5 to 8 lbs. per palm.

Agriform 20-10-8 twenty-one gram planting tablets may be substituted for granular fertilizer. If utilized, the following rates shall be utilized: Position plant in hole. Backfill halfway up the rootball. Place tablet(s) beside rootball about 1" from root tips. Do not place tablet(s) in bottom of hole.

1 Gallon 1 Tablet
3 Gallon 2 Tablets
25 Gallon & B&B Trees 2 per 1" caliper

11. All planting areas and sod to be irrigated to provide 100% coverage. Shop drawings to be submitted by the irrigation contractor for approval prior to installation.
12. Maintain trees, shrubs, and other plants by watering, cultivating, and weeding as required for healthy growth. Restore planting saucers and mulch. Tighten and repair stake and guying and reset trees and shrubs to proper grade or vertical position as required. Spray as necessary to keep trees and shrubs free of insects and disease. The contractor shall begin maintenance immediately after planting and shall continue maintenance through final acceptance when Certificate of Occupancy is issued to the General Contractor by City and project is released by the General Contractor to Client.
13. Prune trees and shrubs only to remove damaged branches as directed by the Landscape Architect.
14. Planting Lawns: Provide clean, strongly rooted, uniformly sized strips of Stenotaphrum secundatum Floritam (unless otherwise noted), machine stripped not more than 24 hours prior to laying. Grade and roll prepared lawn surface. Water thoroughly but not to create muddy soil conditions. Lay sod strips with tight joints, roll or tamp lightly, and water thoroughly.
15. Maintain positive drainage. no planting is to block drainage.
18. Drainage Testing
    Prior to planting of trees, palms, and specimen material, each planting pit shall be tested in the following manner to verify adequate drainage.
    A) Dig each planting pit to the minimum specified size.
    B) Fill the planting pit with (12") twelve inches of water. If the water level in the planting pit drops (4") four or more inches within (4) four hours, the drainage is sufficient and a drainage channel is not required. If the water level drops less than (4") four inches within the (4) four hour period, then a drainage channel is required.
    C) When a drainage channel is required, the drainage channel must extend down through the non porous soil and into porous soil. (See Drainage Testing Detail)
    D) Discard all material removed from the drainage channel.
    E) When backfilling the planting pit, add course gravel to the drainage channel. Also, care must be taken to keep the consistency of the soil mix the same throughout the planting pit.

NOTE:
Contractor to include drainage testing for all trees and palms in bid. If drainage is inadequate, the soil specification in item #8 above shall be revised for site conditions. Contractor shall notify the Owner and Landscape Architect of poor drainage conditions in writing and written direction will be provided to the contractor of appropriate soil mixture specification to be used.

General Notes

ALL PLANT MATERIAL SHALL BE FLORIDA NUMBER 1 OR BETTER AS DEFINED BY THE DIVISION OF PLANT INDUSTRY 'GRADES AND STANDARDS' LATEST EDITION.

VEGETATION REMOVAL PERMITS ARE REQUIRED PRIOR TO REMOVING, CLEARING OR STRIPPING ANY VEGETATION FROM THE PROPERTY.

ALL PROHIBITED TREE SPECIES SHALL BE REMOVED FROM THE SITE AND TREATED TO PREVENT REINFESTATION.

THE LANDSCAPE CONTRACTOR SHALL NOT MAKE ANY SUBSTITUTIONS CHANGES WITHOUT THE AUTHORIZATION OF THE CITY OF RIVIERA BEACH, THE OWNER AND THE LANDSCAPE ARCHITECT.

THE LANDSCAPE CONTRACTOR SHALL REVIEW THE PROJECT DRAINAGE AND UTILITY PLANS PRIOR TO CONSTRUCTION AND AVOID ALL CONFLICTS. THE LANDSCAPE CONTRACTOR SHALL VERIFY THE LOCATION OF ALL UNDERGROUND UTILITIES PRIOR TO COMMENCING WORK.

THE LANDSCAPE CONTRACTOR SHALL BE RESPONSIBLE FOR ALL PERMITS.

ALL TREES PLANTED UNDER OR ADJACENT TO FPL POWER LINES WILL COMPLY WITH THE FPL RIGHT TREE IN THE RIGHT PLACE GUIDELINES (REV 5/95)

PERIMETER TREES AT THE TIME OF PLANTING SHALL BE SPACED IN A WAY THAT COMPLEMENTS THE SPACING OF ANY EXISTING TREES ON ADJACENT DEVELOPED AREAS.

TREES SHALL BE POSITIONED TO AVOID CONFLICTS WITH SIGNAGE AND SITE LIGHTING.

ALL ABOVE GROUND UTILITIES I.E. TRANSFORMERS, SWITCH BOXES, AC CONDENSERS AND ALIKE SHALL BE FULLY SCREENED FROM VIEW ON THREE SIDES WITH LANDSCAPING. THE LANDSCAPING SHALL BE TO THE TALLEST POINT OF SAID EQUIPMENT AT TIME OF PLANTING.

ALL VEGETATION SHALL BE SELECTED AND POSITIONED SO THAT IT DOES NOT PRESENT OBSTRUCTIONS TO THE LINE OF SIGHT AT INTERSECTIONS PURSUANT TO THE CITY OF WEST PALM BEACH CODE SECTION 94-305(e).

TREES AT ENTRANCE WAYS AND WITHIN SIGHT TRIANGLES SHALL BE TRIMMED IN SUCH A FASHION TO MINIMIZE SIGHT VISIBILITY CONFLICTS. CLEAR VISIBILITY SHALL BE MAINTAINED BETWEEN 18" AND 8', TWENTY FIVE BY TWENTY FIVE FOOT SIGHT VISIBILITY TRIANGLES SHALL BE PROVIDED AT THE INTERSECTIONS WITH THE PUBLIC RIGHT OF WAY. IN ADDITION, ALL LANDSCAPING SHALL CONFORM TO THE REQUIREMENTS OF FDOT INDEX 546.

ALL LANDSCAPE ISLANDS AND BEDS WILL BE FREE OF SHELL ROCK AND CONSTRUCTION DEBRIS. EXCAVATED TO A DEPTH OF 30 INCHES OR TO CLEAN NATIVE SOILS AND FILLED WITH THE SPECIFIED BACKFILL MIXTURE.

ALL LANDSCAPE AREAS WILL BE PROVIDED WITH PERMANENT, AUTOMATIC IRRIGATION.

PLANTING ADJACENT TO FIRE HYDRANTS IS TO HAVE A MINIMUM CLEAR RADIUS OF 7.5' AS REQUIRED BY THE NFPA UNIFORM FIRE CODE FLORIDA EDITION 18.3.4.1 HYDRANTS

LANDSCAPE PLAN

NOT TO SCALE

Conceptual Design Group, Inc.

DESIGNED	JWS
DATE	9-9-2014
REVISIONS	

SHEET 2 OF 2

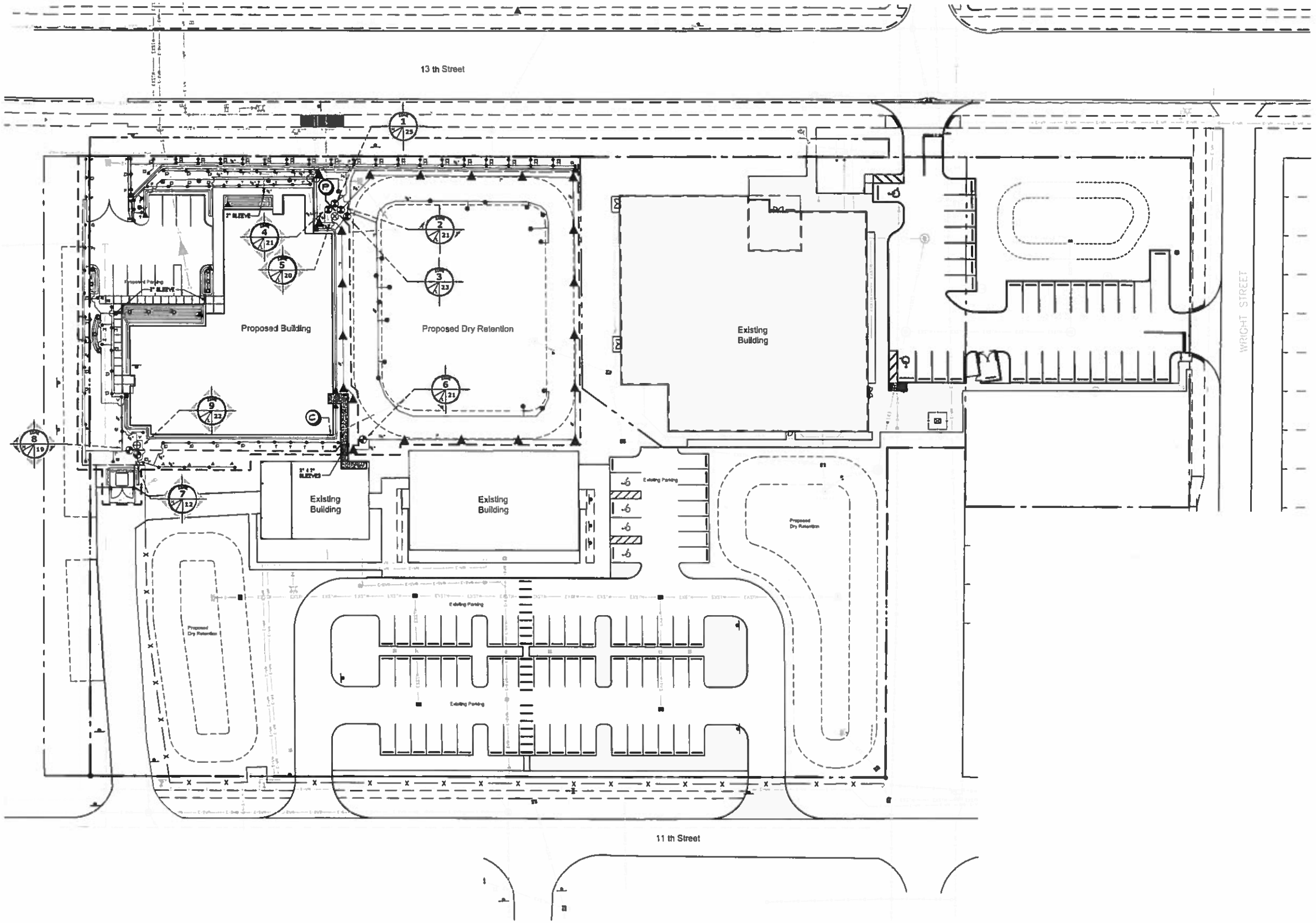

Conceptual Design Group, Inc.
Landscape Architecture - Site Planning
900 East Ocean Boulevard, Suite 130d
Stuart, Florida 34994
(772) 344-2340
LC: 26000198

These drawings are the property of the landscape architect and are not to be used for other projects except by written permission from the landscape architect. Report any discrepancies immediately to the landscape architect.

LAND DEVELOPERS
Urban Planning . Engineering
Landscape Architecture
500 Australian Avenue, Suite 518
West Palm Beach, Florida 33401
Office: 561-832-1653
Fax: 561-683-4574

Riviera Beach Maritime Academy Addition
City of Riviera, Florida

DESIGNED JWS
DATE 9-29-2014
REVISIONS

IRRIGATION PLAN

15' 30' 60' 90' 120'
SCALE 1" = 30'

SCALE · 1" = 30'

SHEET 1 OF 2

LEGEND

•	HUNTER PRS40 6" POP-UP SPRAY HEAD W/ CHECK VALVE
	TREE BUBBLERS- TWO PER TREE. REFER TO THE DETAIL
	NETAFIM DRIP BUBBLER TREE RING- REFER TO DRIP BUBBLER DETAIL
	NETAFIM FLAG INDICATOR- REFER TO THE DETAIL
	NETAFIM FLUSH VALVE
	NETAFIM TECHLINE CV-RW 17MM DRIP TUBING- 1 GPH EMITTERS EVERY 12". PLACE ROWS 12" APART IN ALL GROUND COVER BEDS. INSTALL A DOUBLE ROW ON ALL HEDGE ROWS. DRIP LINES ARE SHOWN PERPENDICULAR TO LANDSCAPE BEDS IN SOME AREAS FOR CLARITY PURPOSES ONLY. INSTALL DRIP TUBING ALONG THE LONGEST WIDTH OF THE PLANT BED. REFER TO ALL NOTES AND DETAILS ON THIS SHEET.
	CLASS 200 PVC MAINLINE-1 1/2"
	CLASS 200 PVC LATERAL LINE- SIZE AS SHOWN UNTIL A SMALLER SIZE IS SHOWN. MINIMUM SIZE OF 3/4"
	SCH. 40 SLEEVE (MINIMUM OF 24" DEPTH AND 2 SIZES LARGER THAN THE PIPE SIZE OR AS LABELED ON THE PLAN)
	HUNTER ICV ELECTRIC VALVE. 1" OR SIZE AS SHOWN BELOW. INSTALL VALVE IN AN 11"X17" VALVE BOX AND COVER 0-24 GPM=1" 25-55 GPM=1 1/2" 56 AND HIGHER GPM=2"
	HUNTER ZONE CONTROL KIT- REFER TO THE DETAIL.
C	CONTROLLER- HUNTER I-CORE SERIES 12 STATION. WHERE SHOWN ON THE PLAN. INSTALL WITH A MINI-CLIK RAIN SENSOR. GROUND WITH A MINIMUM 8' COPPER CLAD ROD. SLEEVE TO AS REQUIRED.
P	POINT OF CONNECTION TO A 1" IRRIGATION METER. REFER TO THE UTILITY PLAN FOR THE EXACT LOCATION AND DETAILS.

ZONE CHART

ZONE	GPM	HEAD TYPE	WATER USE	PRECIP RATE (in. per hour)	RUN TIME (minutes)
1	25	Spray	HIGH	0.5	60
2	31	Rotor	LOW	0.5	60
3	23	Bubbler	LOW	1.5	20
4	21	Rotor	LOW	0.5	60
5	20	Drip	LOW	1.5	20
6	21	Rotor	LOW	0.5	60
7	12	Spray	HIGH	0.5	60
8	19	Spray	HIGH	0.5	60
9	22	Drip	LOW	1.5	20

THIS CHART IS PROVIDED AS A GENERAL OUTLINE ONLY AND IS BASED ON PROVIDING APPROXIMATELY 1 INCH OF WATER PER WEEK. THE CONTRACTOR SHALL BE RESPONSIBLE TO SET THE RUN TIMES ON THE CONTROLLER BASED FOR THE SPECIFIC SITE CONDITIONS. THIS SHALL INCLUDE, BUT NOT LIMITED TO SOIL, WEATHER, PLANT NEEDS AND ESTABLISHMENT PERIOD. THE CONTRACTOR SHALL BE FULLY RESPONSIBLE TO CHECK EQUIPMENT QUANTITIES AND SHALL BE RESPONSIBLE TO INSTALL AND INCLUDE IN THE PROPOSAL ALL EQUIPMENT SHOWN ON THE PLAN. THE PLAN OVERRIDES ANY ERRORS IN QUANTITIES.

GENERAL NOTES

1) REFER TO THE LANDSCAPE PLANS WHEN TRENCHING TO AVOID TREES AND SHRUBS. HAND DIG AROUND ANY EXISTING TREES. DO NOT CUT ANY ROOTS OVER 2" IN DIAMETER.

2) ALL MAINLINE PIPING SHALL BE BURIED TO A MINIMUM DEPTH OF 18" OF COVER. ALL LATERAL PIPING SHALL BE BURIED TO A MINIMUM DEPTH OF 12" OF COVER.

3) ALL POP-UP ROTORS AND SPRAYS SHALL BE INSTALLED USING AN 18" PVC FLEX PIPE CONNECTION. DO NOT USE POLYETHYLENE PIPE.

4) ADJUST ALL NOZZLES TO REDUCE WATER WASTE ON HARD SURFACES & BLDG. WALLS. THROTTLE ALL VALVES ON SHRUB LINES AS REQUIRED TO PREVENT FOGGING. USE ADJUSTABLE NOZZLES WHERE REQUIRED TO AVOID ANY WATER ON BUILDING WINDOWS.

5) ALL RISERS SHALL BE PAINTED BLACK OR A COLOR CHOSEN BY THE OWNER'S REPRESENTATIVE (IF ALLOWED BY CODES) AND SHALL BE STAKED WITH A STEEL ANGLE AND SECURED WITH PVC ULTRAVIOLET LIGHT PROTECTED PVC CLAMPS. RECLAIMED SYSTEMS MAY REQUIRE THE PIPE TO BE PURPLE.

6) ALL CONTROL WIRE SPLICES SHALL BE MADE IN VALVE BOXES USING 3M DBR-Y WIRE CONNECTORS AND SEALANT WITH WIRE NUTS.

7) THE CONTRACTOR SHALL PREPARE AN AS-BUILT DRAWING SHOWING ALL IRRIGATION INSTALLATION. THE CONTRACTOR SHALL NEATLY MARK IN RED INK ON A WHITE BOND PAPER COPY OF THE IRRIGATION PLAN ANY INSTALLATION THAT DEVIATES FROM THE PLAN. THE AS-BUILT DRAWING SHALL ALSO LOCATE ALL MAINLINE AND VALVES BY SHOWING EXACT MEASUREMENTS FROM HARD SURFACES. MEASUREMENTS SHALL BE MARKED ON THE PLAN EVEN WHEN THE EQUIPMENT IS INSTALLED IN THE EXACT LOCATION AS THE PLAN.

8) ALL VALVES, GATE VALVES AND QUICK COUPLERS SHALL BE INSTALLED IN VALVE BOXES. THE VALVE BOXES SHALL BE PURPLE WHEN USING RECLAIMED WATER.

9) ANY PIPING SHOWN OUTSIDE THE PROPERTY LINE OR RUNNING OUTSIDE A LANDSCAPE AREA IS SHOWN THERE FOR CLARITY ONLY. ALL LINES SHALL BE INSTALLED ON THE PROPERTY AND INSIDE THE LANDSCAPE AREAS OR INSIDE A SCH. 40 SLEEVE.

10) ALL HEADS SHALL BE INSTALLED A MINIMUM OF 24" FROM ANY WALL AND A MINIMUM OF 6" FROM ANY SIDEWALK, PATIO OR ROAD. (MINIMUM OF 2' WHERE THERE ARE NO BUMPER STOPS) THE EXACT HEIGHT OF ANY 12" POP-UP THAT IS SHOWN IN A SHRUB BED SHALL BE DETERMINED BY THE OWNER'S REPRESENTATIVE IN THE FIELD.

11) THE CONTRACTOR SHALL EXERCISE CARE SO AS NOT TO DAMAGE ANY EXISTING UTILITIES. THE CONTRACTOR SHALL BE RESPONSIBLE FOR THE IMMEDIATE REPAIRS AND COST OF ANY DAMAGE CAUSED BY THEIR WORK.

12) ALL WORK SHALL BE GUARANTEED FOR ONE YEAR FROM THE DATE OF FINAL ACCEPTANCE AGAINST ALL DEFECTS IN EQUIPMENT AND WORKMANSHIP. (OR AS OUTLINED IN THE WRITTEN SPECIFICATIONS)

13) ELECTRICAL SERVICE TO LOCATION OF THE CONTROLLER, WELL OR PUMP SHALL BE PROVIDED TO A JUNCTION BOX OR DISCONNECT AT THE EQUIPMENT LOCATION BY THE ELECTRICAL CONTRACTOR OR BY OWNER WHEN IT IS NOT PART OF THE BID PACKAGE. CONFIRM THE LOCATION OF THE CONTROLLER WITH THE OWNER OR GENERAL CONTRACTOR BEFORE ANY INSTALLATION.

14) IT SHALL BE THE RESPONSIBILITY OF THE CONTRACTOR TO SCALE THE PLAN AND CHECK NOZZLE TYPES TO DETERMINE THE CORRECT SPACING OF THE HEADS. THE CONTRACTOR SHALL NOT SPACE THE HEADS FURTHER APART OR USE LESS HEADS THAN SHOWN ON THE PLAN. ANY CHANGES TO THE HEAD SPACING OR LAYOUT, WITHOUT THE CONSENT OF THE LANDSCAPE ARCHITECT OR OWNER, SHALL HOLD THE IRRIGATION CONTRACTOR RESPONSIBLE FOR WARRANTY OF THE PLANTS AND OR SOD IN THESE AREAS.

15) 48 HOURS BEFORE DIGGING, CALL 1-888-432-4770 (SUNSHINE STATE ONE CALL CENTER)

DRIP TUBING NOTES

1) INSTALL ALL DRIP TUBING AT GROUND LEVEL. AFTER PLANT INSTALLATION, INSTALL NETAFIM TUBE U SHAPED WIRE STABILIZERS A MIN. OF 4" O.C. TO HOLD THE LINES IN PLACE.

2) KEEP ALL DRIP LINE CLEAN AT ALL TIMES BEFORE THE FINAL CONNECTION. ALL TUBE ENDS SHALL BE INTERCONNECTED TO ALL OTHER DRIP TUBES. DO NOT DEAD END TUBING. SINGLE ROWS SHALL HAVE A END CAP AND NOT BENT OVER OR TAPED.

3) AVOID SHARP BENDS IN THE TUBING. DO NOT BEND THE TUBING WITH LESS THEN A 5" RADIUS. THERE SHALL NOT BE ANY KINKS IN THE TUBING.

4) ALL DRIP TUBING SHALL HAVE UNIFORM SPACING AND BURIAL DEPTH. THE PLAN DOES NOT ALWAYS REFLECT THE EXACT SPACING OR LAYOUT OF THE TUBING. LAYOUT THE TUBING DOWN THE LONGEST WIDTH WHEN POSSIBLE. ADAPT THE TUBING TO CURVED BEDS OR PLANTERS AS REQUIRED. ADJUST AND ADAPT THE TUBING FOR ALL TREES. REFER TO THE TREE DRIP RING DETAIL.

5) INSTALL DRIP TUBING TO ALL AREAS THAT SHALL RECEIVE PLANT MATERIAL. SEE THE LANDSCAPE PLAN FOR THE EXACT LOCATIONS. THERE SHALL BE A MINIMUM OF TWO ROWS OF TUBING ON A SINGLE ROW OF PLANTS.

6) SPACE TUBING AS NOTED ON THE PLAN. DO NOT SNAKE TUBING BACK AND FORTH EXCEPT WHERE SHOWN ON THE PLAN. ALWAYS INSTALL A HEADER PIPE UNLESS THE TOTAL GALLONAGE OF AN AREA IS 3 GPM OR LESS.

7) REFER TO THE MANUFACTURERS DRIP INSTALLATION MANUAL FOR INSTALLATION INSTRUCTIONS. ALL FITTINGS SHALL BE THE SAME TYPE AND MANUFACTURER AS THE DRIP TUBING.

8) ALWAYS FLUSH ALL LINES BEFORE FINAL CONNECTION.

9) INSTALL A "SYSTEM ON" INDICATOR FLAG ON EVERY ZONE WHERE IT IS SEEN FROM THE CONTROL VALVE.

10) INSTALL FLUSH VALVES WHERE SHOWN AT THE ENDS OF EACH RUN OF DRIP TUBING AND ONE FOR EVERY 15 GPM OF TUBING.

11) CLEARLY AND NEATLY MARK THE TOP OF EACH VALVE BOX WITH THE TYPE OF EQUIPMENT THAT IT CONTAINS. (I.E. VALVE, FLUSH VALVE, ETC.)

12) THE DRIP ZONE VALVE ASSEMBLY SHALL BE PLACED INSIDE AN ARMOR JUMBO VALVE BOX. THE VALVE SHALL BE INSTALLED AS PER THE DETAIL ON THE PLANS.

13) THE DRIP TUBING SHALL HAVE EMITTERS EVERY 12" AND SHALL BE SPACED 12" APART IN GROUND COVER BEDS AND A MINIMUM OF TWO RUNS FOR EACH ROW OF SHRUBS WHEN THE SHRUBS ARE SPACED FARTHER THAN 2' ON CENTER.

14) REFER TO THE ZONE CONTROL KIT DETAIL FOR FILTER SIZES.

15) THE IRRIGATION CONTRACTOR SHALL BE RESPONSIBLE TO COORDINATE HIS/HER WORK WITH THE LANDSCAPE CONTRACTOR.

NOZZLE CHART

LETTER • PRODUCT SPEC. • GPM • 45PSI • RADIUS • RADIUS/ANGLE • ZONE LABELS

A	MP2000	0.41	13'	FULL	360	
B	MP CORNER	.49	14'	CORNER	90	
C	MP CORNER	.73	14'	CORNER	45	
D	MP2000	.74	15'	HALF	180	
F	MP2000	.49	13'	QUARTER	90	
G	MP STRIP	.22	5' X 15'	END STRIP		
H	RAINBIRD 5Q-H	.23	4.5'	HALF PATTERN		
J	MP1000	.50	14'	THREE QTR.	270	
K	MP1000	.70	14'	FULL	360	
M	MP SIDE STRIP	.44	5' X 30'	SIDE STRIP		
P	MP3000	1.86	30'	HALF PATTERN	180	
R	MP1000	.75	14'	QUARTER	90	
S	MP SR SERIES	.42	6'	HALF	180	
T	MP1000	.37	14'	HALF	180	
V	MP3000	.86	30'	QUARTER	90	
W	MP3000	1.82	30'	HALF	180	
X	MP3000	2.73	30'	THREE QTR.	270	
Y	MP3000	3.64	30'	FULL	360	
Z	MP2000	1.10	13'	THREE QTR.	270	

ZONE NUMBER

GALLONS PER MINUTE WATER USE

H=HIGH ST. AUGUSTINE AND ZOYSIA SOD

M=MEDIUM PLANT MATERIAL

L=LOW BAHIA SOD NATIVE PLANTS

THE NOZZLES LISTED SHOW THE TYPE OF MP ROTATOR NOZZLE THAT SHOULD BE USED. THE CONTRACTOR SHOULD INSTALL THE MP2000, MP3000, MP1000 OR SPECIALTY NOZZLE IN EACH HEAD AS SHOWN BY THE LETTER BESIDE THE HEAD ON THE PLAN. THE GPM, DISTANCE AND ANGLE ON THE NOZZLE CHART ARE APPROXIMATE. THE CONTRACTOR SHALL ADJUST ALL NOZZLES TO PROVIDE THE 100% COVERAGE, BUT LIMIT OVERTHROW ON TO BUILDINGS, WALLS, PAVEMENT, ETC. THE HEADS SHALL BE SPACED AS PER THE PLAN. SCALE THE PLAN FOR DISTANCE. DO NOT ASSUME THAT ALL HEADS ARE SPACED AS PER CONVENTIONAL SPRAY HEADS. THE PRECIPITATION RATE FOR THESE NOZZLES IS LESS THAN A CONVENTIONAL SPRAY NOZZLE. FOLLOW THE ZONE CHART FOR AN APPROXIMATE RUN TIME FOR EACH ZONE, BUT SET THE RUN TIME ON THE CONTROLLER BASED ON THE SPECIFIC SITE CONDITIONS.

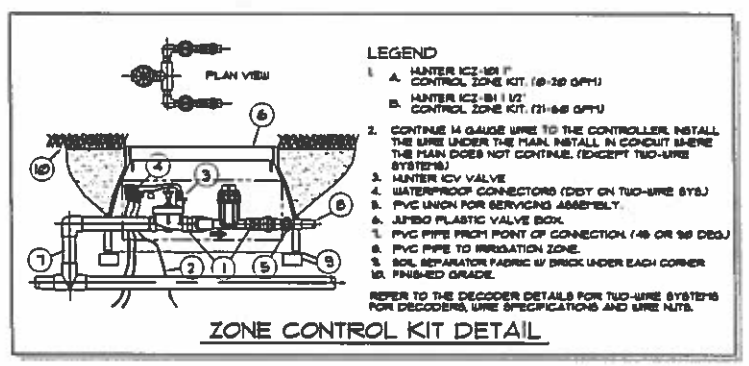

ZONE CONTROL KIT DETAIL

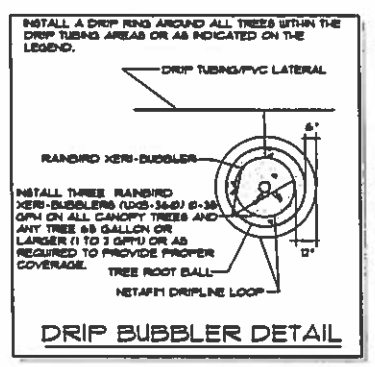

DRIP BUBBLER DETAIL

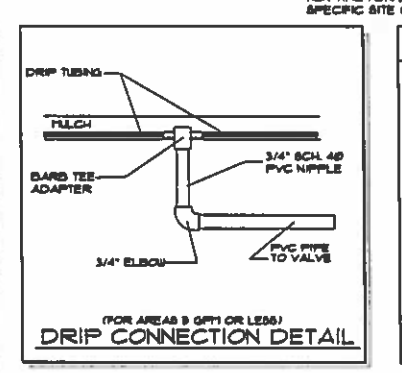

(FOR AREAS 3 GPM OR LESS)
DRIP CONNECTION DETAIL

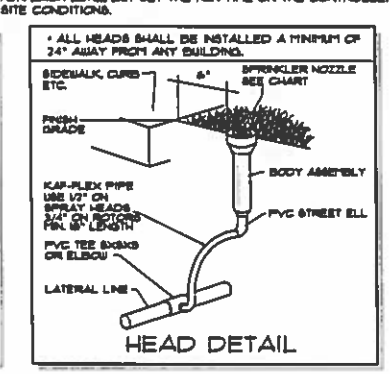

HEAD DETAIL

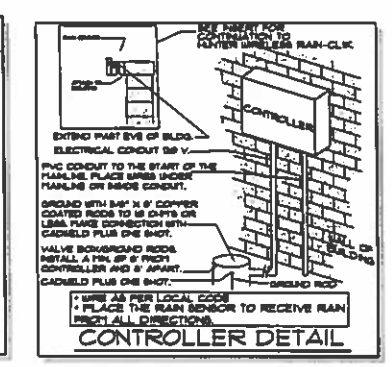

CONTROLLER DETAIL

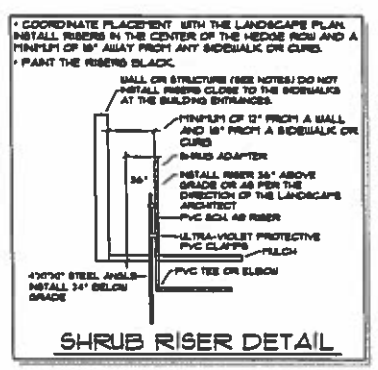

SHRUB RISER DETAIL

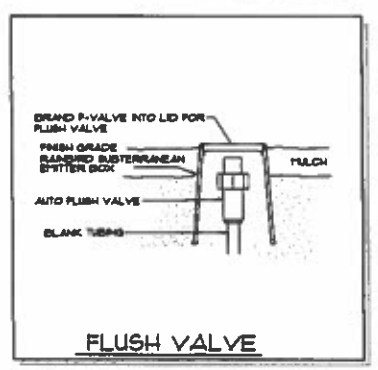

FLUSH VALVE

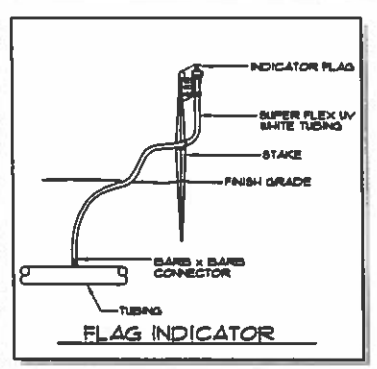

FLAG INDICATOR

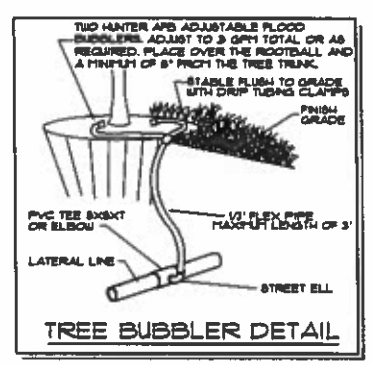

TREE BUBBLER DETAIL

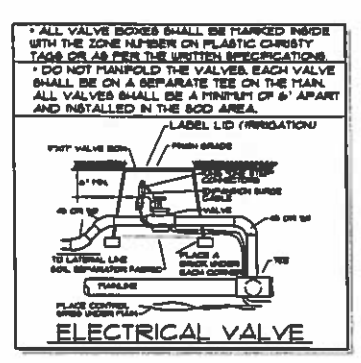

ELECTRICAL VALVE

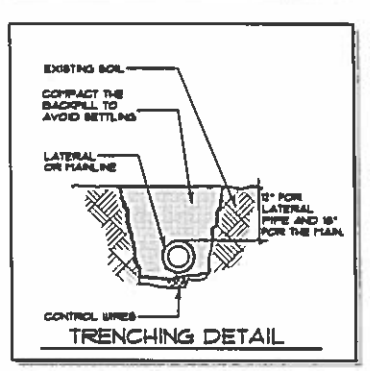

TRENCHING DETAIL

NOT TO SCALE

Conceptual Design Group, Inc.
Landscape Architecture - Site Planning
900 East Ocean Boulevard, Suite 130d
Stuart, Florida 34994
(772) 344-2349
LC. 26000198

These drawings are the property of the landscape architect and are not to be used for other projects except by written permission from the landscape architect. Report any discrepancies immediately to the landscape architect.

LAND DEVELOPERS
Urban Planning , Engineering
Landscape Architecture
Australian Avenue, Suite 518
West Palm Beach, Florida 33401
Office: 561-832-1653
Fax: 561-683-4574

Riviera Beach Maritime Academy Addition
City of Riviera, Florida

DESIGNED	JWS
DATE	9-29-2014
REVISIONS	

DOOR HARDWARE:

Hardware Group No. 01 - Exterior-Card Access
Provide each PR door(s) with the following:
6 EA HINGE 5BB1 4.5 X 4.5 NRP 630 IVE
2 EA POWER TRANSFER EPT10 CON 689 FAL
2 EA ELEC PANIC HARDWARE RX-QEL-98-CON 626 VON
2 EA RIM HOUSING C953 626 FAL
2EA SFIC CORE C606 626 FAL
2EA SURFACE CLOSER SC71 SS 689 FAL
2EA TOP RAIL DROP PLATES C73-19PA 689 FAL
1EA MULTITECH READER MT15 BLK SCE
1EA POWER SUPPLY PS902 LDR VON
Balance of hardware by storefront manufacturer. Hurricane code compliant opening.
Card access system by security supplier.
Operational Description
Free Egress at all times. Pressing Push Bar retracts latchbolts. Latchbolt retracted by lever unless locked by key. Key locks and unlocks lever. Card/contact electrically retracts the latchbolt, either for momentary unlocking or for extended periods of time. Provides dual operation. One internal SPDT switch monitors the depression of the pushbar or crossbar.

Hardware Group No. 02 - Exterior-Stair
Provide each PR door(s) with the following:
6 EA HINGE 5BB1 4.5 X 4.5 NRP 630 IVE
1 EA KEYED FIRE RATED REMOVABLE MULLION KR9954-M/TSAS728 VON
2 EA PANIC HARDWARE 99-2S-R-EO-SNB 630 FAL
1 EA MULLION STABILIZER 154 689 VON
1 EA MORTISE CYLINDER 985 626 FAL
2 EA SURFACE CLOSER SC71 SS 689 FAL
2 EA KICK PLATE 8400 10" X 2" LDW 630 IVE
2 SET SEALS 303AS 108" 2" AL PEM
1 EA THRESHOLD 2005AV 72" MSES10 AL PEM
Hurricane code compliant opening. Hardware as scheduled per Ingersoll Rand NOA #12-0335.15
Operational Description
Mullion removable by key.
Free Egress at all times. Pressing Push Bar retracts latchbolts. No exterior trim. Dogging by hex key locks down the pushbar or crossbar so the latchbolt remains retracted.

Hardware Group No. 03 - Exterior-Card Access
Provide each SGL door(s) with the following:
3 EA HINGE 5BB1 4.5 X 4.5 NRP 630 IVE
1 EA POWER TRANSFER EPT10 CON 689 FAL
1 EA ELEC PANIC HARDWARE QEL-98-CON 626 VON
1 EA RIM HOUSING C953 626 FAL
1 EA SFIC CORE C606 626 FAL
1 EA SURFACE CLOSER SC71 SS 689 FAL
1 EA TOP RAIL DROP PLATE SC73-19PA 689 FAL
1 EA MULTITECH READER MT15 BLK SCE
1 EA POWER SUPPLY PS902 LDR VON
Balance of hardware by storefront manufacturer. Hurricane code compliant opening.
Antenna by security supplier.

Hardware Group No. 04 - Exterior-Electrical
Provide each SGL door(s) with the following:
3 EA HINGE 5BB1 4.5 X 4.5 NRP 630 IVE
1 EA PANIC HARDWARE 99-2S-R-L-E19-DANE-SNB 630 FAL
1 EA MORTISE CYLINDER C987 626 FAL
1 EA SFIC CORE C606 626 FAL
1 EA SURFACE CLOSER SC71 SS 689 FAL
1 EA KICK PLATE 8400 10" X 2" LDW 630 IVE
1 SET SEALS 303AS 108" 2" AL PEM
1 EA THRESHOLD 2005AV 36" MSES10 AL PEM
Hurricane code compliant opening. Hardware as scheduled per Ingersoll Rand NOA #12-0335.14
Operational Description
Free Egress at all times. Pressing Push Bar retracts latchbolts. Latchbolt retracted by lever unless locked by key. Key locks and unlocks lever. Dogging by hex key locks down the pushbar or crossbar so the latchbolt remains retracted.

Hardware Group No. 05 - Exterior-Elevator Machine Room
Provide each SGL door(s) with the following:
3 EA HW HINGE 5BB1HW 4.5 X 4.5 NRP 630 IVE
1 EA STOREROOM LOCK T581PD DANE 626 FAL
1 EA SURFACE CLOSER SC71 SS 689 FAL
1 EA KICK PLATE 8400 10" X 2" LDW 630 IVE
1 SET SEALS 303AS 108" 2" AL PEM
1 EA THRESHOLD 2005AV 48" MSES10 AL PEM
Hurricane code compliant opening. Hardware as scheduled per Ingersoll Rand NOA #12-0335.14

Hardware Group No. 06 - Stair
Provide each PR door(s) with the following:
6EA HINGE 5BB1 4.5 X 4.5 NRP 652 IVE
1EA KEYED FIRE RATED REMOVABLE MULLION KR9954-SP28 VON
1EA FIRE EXIT HARDWARE F-25-R-L-BE-4"-DANE-SNB 626 FAL
1EA MULLION STABILIZER 154 689 VON
1EA MORTISE CYLINDER 985 626 FAL
2EA SURFACE CLOSER SC71 SS 689 FAL
2EA KICK PLATE 8400 10" X 2" LDW 630 IVE
2SET SEALS 303AS 108" 2" AL PEM
1EA THRESHOLD 2005AV 72" MSES10 AL PEM
Hurricane code compliant opening. Hardware as scheduled per Ingersoll Rand NOA #12-0335.15
Operational Description
Mullion removable by key.
Free Egress at all times. Pressing Push Bar retracts latchbolts. Latchbolt retracted by lever at all times.

Hardware Group No. 07 - Closet
Provide each BF door(s) with the following:
2EA SINGLE DUMMY TRIM T12 DANE 626 FAL
Balance of hardware by bifold manufacturer

Hardware Group No. 08 - Stair
Provide each SGL door(s) with the following:
3EA HINGE 5BB1 4.5 X 4.5 NRP 652 IVE
1EA FIRE EXIT HARDWARE F-25-R-L-BE-4"-DANE-SNB 626 FAL
1EA SURFACE CLOSER SC81 HDPA 689 FAL
EA KICK PLATE 8400 10" X 2" LDW 630 IVE
EA FLOOR STOP FS434 604 IVE
1SET SEALS 303AS 108" 2" AL PEM
1EA THRESHOLD 2005AV 36" MSES10 AL PEM
Operational Description
Free Egress at all times. Pressing Push Bar retracts latchbolts. Latchbolt retracted by lever at all times.

Hardware Group No. 09 - Reception
Provide each SGL door(s) with the following:
3EA HINGE 5BB1 4.5 X 4.5 652 IVE
1EA PASSAGE SET T101S DANE 626 FAL
1EA WALL STOP WS406/407CVX 630 IVE
3EA SILENCER SR64 GRY IVE
Operational Description
Latch bolt by levers at all times.

Hardware Group No. 10 - Restroom
Provide each SGL door(s) with the following:
3 EA HINGE 5BB1 4.5 X 4.5 652 IVE
1 EA PRIVACY LOCK T301S DANE 626 FAL
1 EA SURFACE CLOSER SC81 REG OR PA AS REQ 689 FAL
1 EA KICK PLATE 8400 10" X 2" LDW 630 IVE
1 EA FLOOR STOP FS436 626 IVE
3 EA SILENCER SR64 GRY IVE

Hardware Group No. 11 - Principle Guidance Bus. Manager
Provide each SGL door(s) with the following:
3 EA HINGE 5BB1 4.5 X 4.5 652 IVE
1 EA ENTRY LOCK T501PD DANE 626 FAL
1 EA KICK PLATE 8400 10" X 2" LDW 630 IVE
1 EA WALL STOP WS 406-407 CVX 630 IVE
3 EA SILENCER SR64 GRY IVE

Group No. 12 - Conference Work Room Asst. Principal
Provide each SGL door(s) with the following:
3 EA HINGE 5BB1 4.5 X 4.5 652 IVE
1 EA ENTRY/OFFICE LOCK T511PD DANE 626 FAL
1 EA SURFACE CLOSER SC81 REG OR PA AS REQ 689 FAL
1 EA KICK PLATE 8400 10" X 2" LDW 630 IVE
1 EA WALL STOP WS 406-407 CVX 630 IVE
3 EA SILENCER SR64 GRY IVE

Hardware Group No. 13 - Classroom
Provide each SGL door(s) with the following:
3 EA HINGE 5BB1 4.5 X 4.5 NRP 652 IVE
1 EA CLASSROOM LOCK T561PD DANE 626 FAL
1 EA SURFACE CLOSER SC81 SS 689 FAL
1 EA KICK PLATE 8400 10" X 2" LDW 630 IVE
3 EA SILENCER SR64 GRY IVE

Hardware Group No. 14 - Classroom Storage
Provide each SGL door(s) with the following:
3 EA HINGE 5BB1 4.5 X 4.5 652 IVE
1 EA CLASSROOM LOCK T561PD DANE 626 FAL
1 EA KICK PLATE 8400 10" X 2" LDW 630 IVE
1 EA WALL STOP WS 406-407CVX 630 IVE
3 EA SILENCER SR64 GRY IVE

Hardware Group No. 15 - Reception-Electric Release
Provide each SGL door(s) with the following:
3 EA HINGE 5BB1 4.5 X 4.5 652 IVE
1 EA STOREROOM LOCK T581PD DANE 626 FAL
1 EA ELECTRIC STRIKE 6211AL FSE 24 CON 630 VON
1 EA SURFACE CLOSER SC81 HDPA 689 FAL
1 EA WALL STOP WS 406-407 CVX 630 IVE
3 EA SILENCER SR64 GRY IVE
Buzzer to be mounted at reception desk by electrical supplier.
Operational Description
Entry buzzer will sound when strike is activated. Electric strike is released when power is applied (Fail Secure). Wire Connector

Hardware Group No. 16 - Data Controlled Storage
Provide each SGL door(s) with the following:
3 EA HINGE 5BB1 4.5 X 4.5 652 IVE
1 EA STOREROOM LOCK T581PD DANE 626 FAL
1 EA SURFACE CLOSER SC81 REG OR PA AS REQ 689 FAL
1 EA KICK PLATE 8400 10" X 2" LDW 630 IVE
1 EA FLOOR STOP FS434 604 IVE
3 EA SILENCER SR64 GRY IVE

DOOR HARDWARE SETS
Mark # / Hdwr #

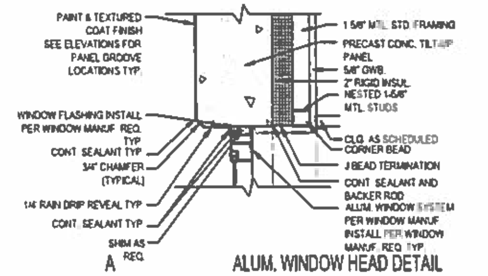

A ALUM. WINDOW HEAD DETAIL
1 1/2" = 1'-0"

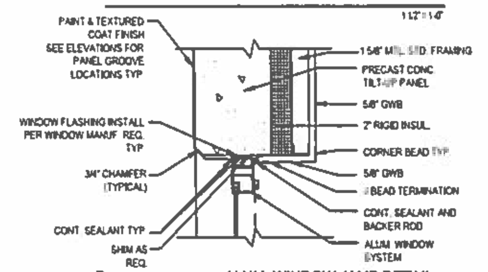

B ALUM. WINDOW JAMB DETAIL
1 1/2" = 1'-0"

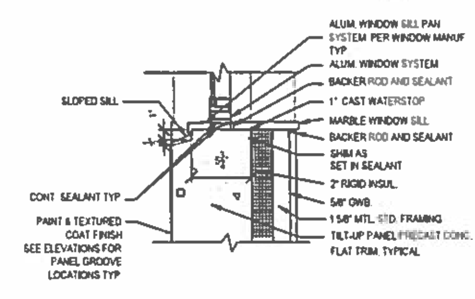

C ALUM. WINDOW SILL DETAIL
1 1/2" = 1'-0"

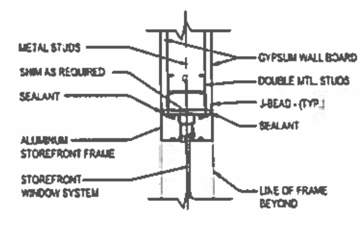

D HEAD DETAIL
SCALE 1-1/2"=1'-0"

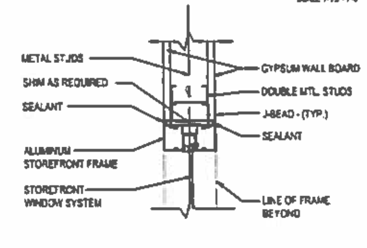

E JAMB DETAIL
SCALE 1-1/2"=1'-0"

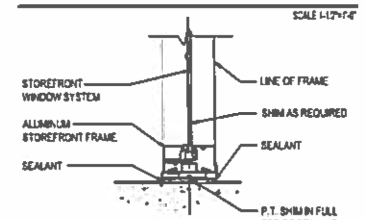

F SILL DETAIL
SCALE 1-1/2"=1'-0"

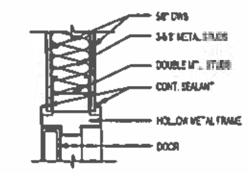

01 HEAD DETAIL
1 1/2" = 1'-0"

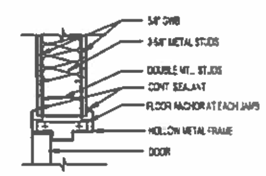

02 JAMB DETAIL
1 1/2" = 1'-0"

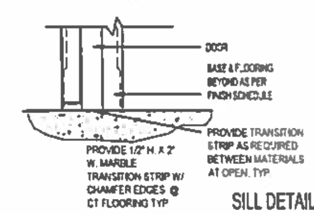

03 SILL DETAIL
1 1/2" = 1'-0"

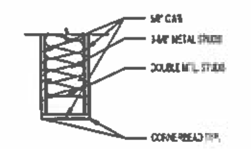

04 HEAD DETAIL
1 1/2" = 1'-0"

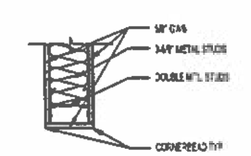

05 JAMB DETAIL
1 1/2" = 1'-0"

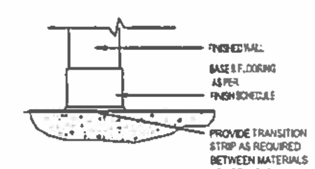

06 SILL DETAIL
1 1/2" = 1'-0"

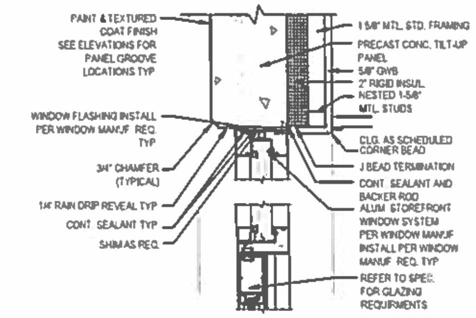

07 HEAD DETAIL
1 1/2" = 1'-0"

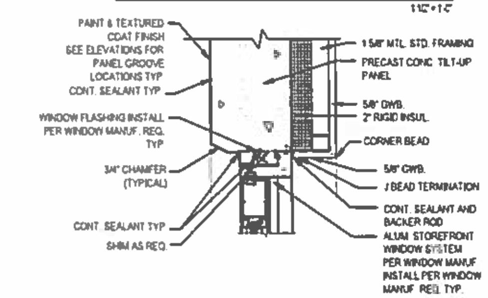

08 JAMB DETAIL
1 1/2" = 1'-0"

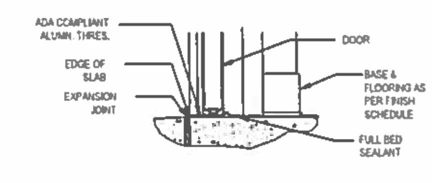

09 SILL DETAIL
1 1/2" = 1'-0"

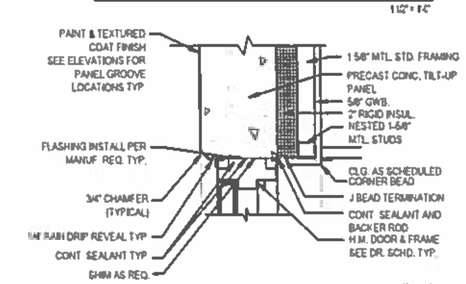

10 HEAD DETAIL
1 1/2" = 1'-0"

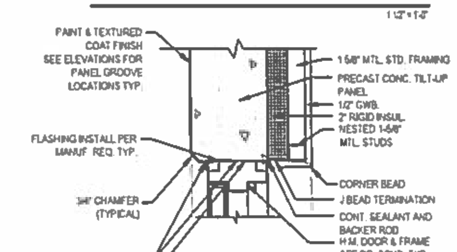

11 JAMB DETAIL
1 1/2" = 1'-0"

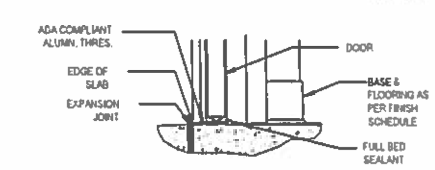

12 SILL DETAIL
1 1/2" = 1'-0"

HARVARD•JOLLY
ARCHITECTURE

Ft. Lauderdale 954-486-7910
Ft. Myers 239-275-7774
Jacksonville 904-396-3300
Orlando 407-667-7727
Punta Gorda 941-575-0403
St. Petersburg 727-896-4611
Tampa 813-286-8206
West Palm Beach 561-478-4457
AAC000119
www.HarvardJolly.com
WEST PALM BEACH, FL

NEW CLASSROOM BUILDING
RIVIERA BEACH MARITIME ACADEMY
RIVIERA BEACH, FLORIDA
CONTRUCTION DOCUEMENTS

Comm. No	214031.00
Date	09-24-14
Drawn	
Revised	

copyright 2014

René Torcilla AIA, REFP

A6.2

P:\T0042.00\plot\A6.2.dwg, 9/25/2014 2:04:18 PM

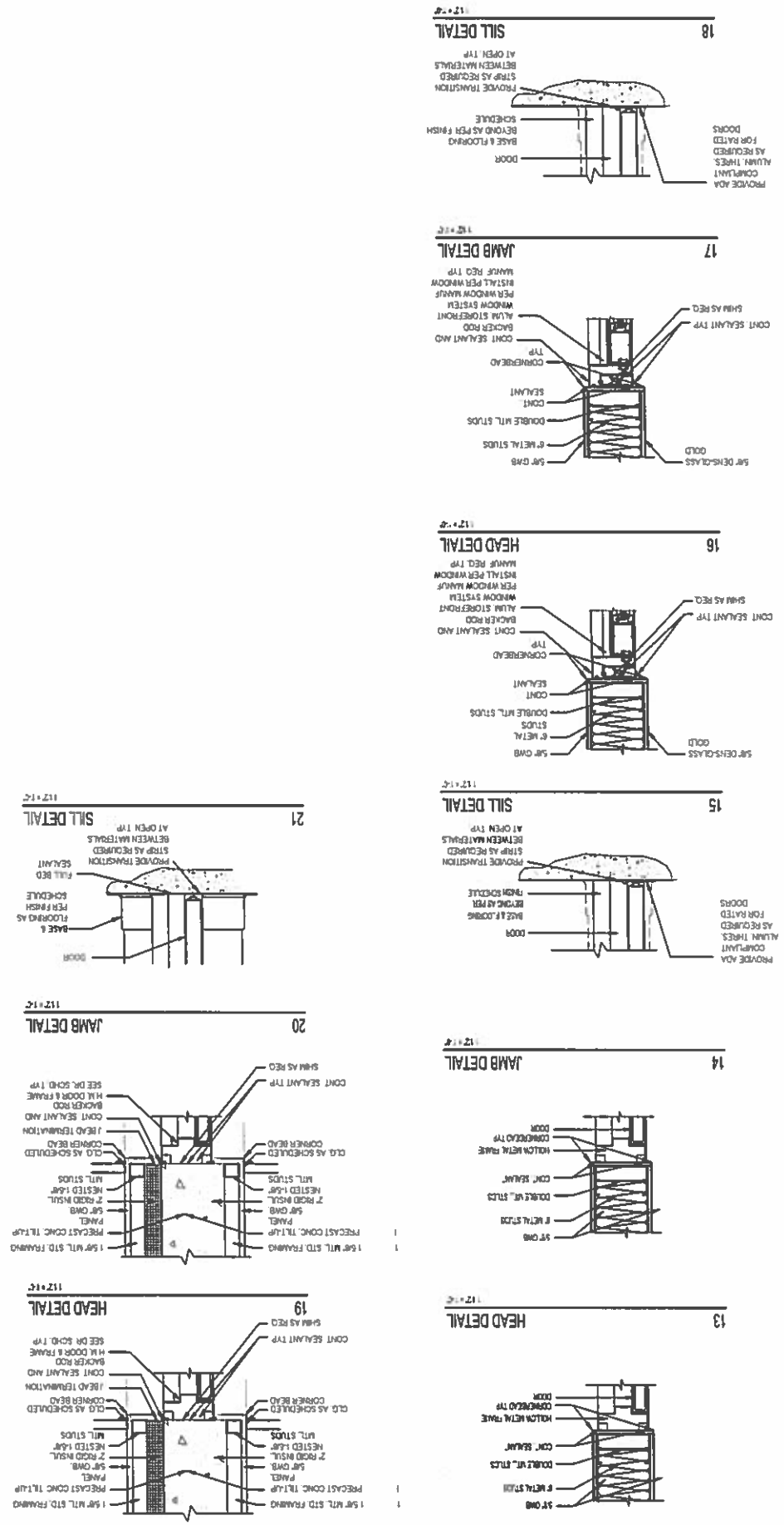

A6.3

Rene Tercilla AIA REFR

copyright 2014

Comm. No. 214031.00
Date 09-24-14
Drawn:
Revised:

NEW CLASSROOM BUILDING
RIVIERA BEACH MARITIME ACADEMY
RIVIERA BEACH, FLORIDA
CONTRUCTION DOCUEMENTS

Ft. Lauderdale 954-485-7910
Ft. Myers 239-275-7774
Jacksonville 904-365-3300
Orlando 407-667-7727
Punta Gorda 941-575-0403
St. Petersburg 727-896-4611
Tampa 813-286-8208
West Palm Beach 561-478-4457
AAC000119
www.HarvardJolly.com
WEST PALM BEACH, FL

HARVARD•JOLLY
ARCHITECTURE

P:\T0042 OD\plan\A6.3.dwg, 9/25/2014 2:04:40 PM

MISC. ACCESSORIES & EQUIPMENT

(SEE SPECIFICATIONS FOR MORE INFO.)

- MH — MOP HOLDER- B-223 SURFACE MOUNTED STAINLESS STEEL MOP HOLDER (PROVIDE AT EACH CUSTODIAL CLOSET) 36" LONG UNLESS OTHERWISE NOTED
- VF-1 — 86"W X 72"H POWERED- VIDEO FORMAT SCREEN W/ BLACK MASKING BORDERS- ELECT OPER. PROJECTOR 14'-0" AWAY
- CLK — CLOCK- GPS CLOCK SYSTEM VERIFY QUANTITY & LOCATION WITH PLANS GPS WIRELESS CLOCK SYSTEM SHALL BE MANUFACTURED BY PRIMEX WIRELESS, INC.(800) 537-6494 FAX (262) 248-0061 WWW.PRIMEXWIRELESS.COM, OR EQUAL.
- VP — PROVIDE & INSTALL VIDEO PROJECTOR MNT. PLATE & ALL OF THE SYSTEMS WIRING & CABLING REQUIRED.
- SCS — SATELLITE CONTROL STATION- AUDIO DATA CABLE, VIDEO POWER. CONNECTIONS SEE ELECTRICAL DWGS.
- FJDE — FLOOR JUNCTION BOX W/ DATA & POWER- PROVIDE A FLOOR J-BOX DATA & POWER FOR (3) COMPUTERS AT EA. LOCATION SHOWN. FOR CONNECTIONS SEE ELECTRICAL DWGS.
- DF — ELECTRIC WATER COOLER SEE PLUMBING DWGS.
- REF — FULL SIZE REFRIGERATOR - FRIGIDAIRE - 8 CU. FT. FGHT 1846 KP TOP FREEZER REFRIGERATOR OR EQUAL.
- MIC — MICROWAVE - GE PROFILE SPACEMAKER® 1.6 CU FT UNDER CABINET MNT. OR EQUAL.
- SINK — REFER TO PLUMBING DWGS.
- TD1 — SURFACE MOUNTED ROLL PAPER TOWEL DISPENSER-RENOWN HANDS FREE SYSTEM RENDS157-WB OR EQUAL.
- SD1 — WALL MOUNTED SOAP DISPENSER- RENOWN REND8129 CLEAR VIEW BULK SOAP DISP 46OZ WHT LIQUID SOAP DISPENSER OR EQUAL.
- MB — MARKER BOARD- 4'X4' PORCELAIN ENAMEL MARKER BOARDS BASIS OF DESIGN POLYVISION E3 ENVIRONMENTAL CERAMICSTEEL SURFACE,PROVIDE BALANCED HIGH PRESSURE LAMINATED PORCELAIN ENAMEL MARKER BOARDS OF 3-PLY CONSTRUCTION CONSISTING OF FACE SHEET, CORE MATERIAL AND BACKING.
- TB — TACK BOARD- 4'X4' FABRIC FACED OR NATURAL CORK TACK BOARDS AS SELECTED BY THE ARCHITECT. PROVIDE MILDEW RESISTANT WASHABLE, TWO-PLY 100 PERCENT RECYCLED POLYESTER FABRIC WITH A PLAIN WEAVE PATTERN COMPLYING WITH FS CCC-W-408 TYPE II MILDEW RESISTANT LAMINATED TO 1 1/4" THICK CORK BACKING SHEET.PROVIDE ONLY FABRIC THAT HAS A FLAME SPREAD RATING OF 25 OR LESS WHEN TESTED IN ACCORDANCE WITH THE REQUIREMENTS OF ASTM E 84.
- SB — SMART BOARD- INSTALL AUDIO, DATA CABLE, VIDEO, POWER, CONNECTIONS SEE ELECTRICAL DWGS. (PANASONIC UB-T880 IS A MULTI-TOUCH INTERACTIVE ELITE PANABOARD DIAGONAL 77-INCH (66.3" X 61.7") ANTI-GLARE PANEL 4:3 ASPECT RATIO MULTI-USER (UP TO 3 USERS) AND MULTI-TOUCH SENSITIVE CONES WITH MULTI FUNCTION ELECTRONIC PEN BUILT-IN SPEAKERS 2 BUILT-IN USB PORTS & VIDEO PROJECTOR W/ SUPPORT ARM BY OWNER).
- GB1 — BOBRICK 36" GRAB BAR - B-6136.99 X 36" 1 1/2" DIAMETER PEENED GRIP HORIZONTAL GRAB BAR WITH CONCEALED MOUNTING. STAINLESS STEEL OR EQUAL.
- GB2 — BOBRICK 42" GRAB BAR - B-6108.99 X 42" 1 1/2" DIAMETER PEENED GRIP HORIZONTAL GRAB BAR WITH CONCEALED MOUNTING. STAINLESS STEEL OR EQUAL.
- MS — BOBRICK B-2908 1824 STAINLESS STEEL MIRROR 18" X 24" OR EQUAL.
- MSF — FULL HGT. x 48" S.S. MIRROR
- ND — BOBRICK B-254 SURFACE MOUNTED FEMININE NAPKIN DISPOSAL OR EQUAL.
- TD1 — SURFACE MOUNTED ROLL PAPER TOWEL DISPENSER-RENOWN HANDS FREE SYSTEM RENDS157-WB OR EQUAL.
- RH — BOBRICK B-2888 SURFACE MNT. MULTI-ROLL TOILET TISSUE DISPENSER OR EQUAL.
- WF — (4) COMPARTMENT WASH FOUNTAIN W/ SOAP DISPENSERS-TERRECON BRADLEY QUADRA-FOUNT MODEL MF2944 OR EQUAL.
- DF — ELECTRICAL WATER COOLERS SEE A8.1 FOR MNT. HGHTS.
- FS — FLOOR SINK. REFER TO PLUMBING DWGS. INSTALL FRP PANELS & TRIM 30" H. ON WALLS AROUND SINK TYP.
- PART — RESTROOM STALL PARTITION SOLID COLOR PHENOLIC FLOOR ANCHORED/ OVERHEAD BRACED BY ACCURATE PARTITIONS W/ S.S. HARWARE & STILES OR EQUAL.
- WC — WATER CLOSET REFER TO PLUMBING DWGS.
- URN — URINAL REFER TO PLUMBING DWGS.
- FD — FLOOR DRAIN SEE PLUMBING DWGS.
- HD — ELECT. HAND DRYER -HAND DRYER FROM ONE OF THESE MANUFACTURERS AMERICAN DRYER, INC. BOBRICK, PINNACLE DRYER CORP. EXCEL DRYER, INC. OR WORLD DRYER.
- HW — ELECT. WATER HEATER- REFER TO ELECTRICAL & PLUMBING DWGS. TYP
- HANDICAPPED CLEAR FLOOR SPACE
- * — INDICATES TALL CASEWORK
- FE / FEC — FIRE EXTINGUISHER / FIRE EXTINGUISHER CABINET. (PROVIDE FIRE BLANKETS AS REQ.)

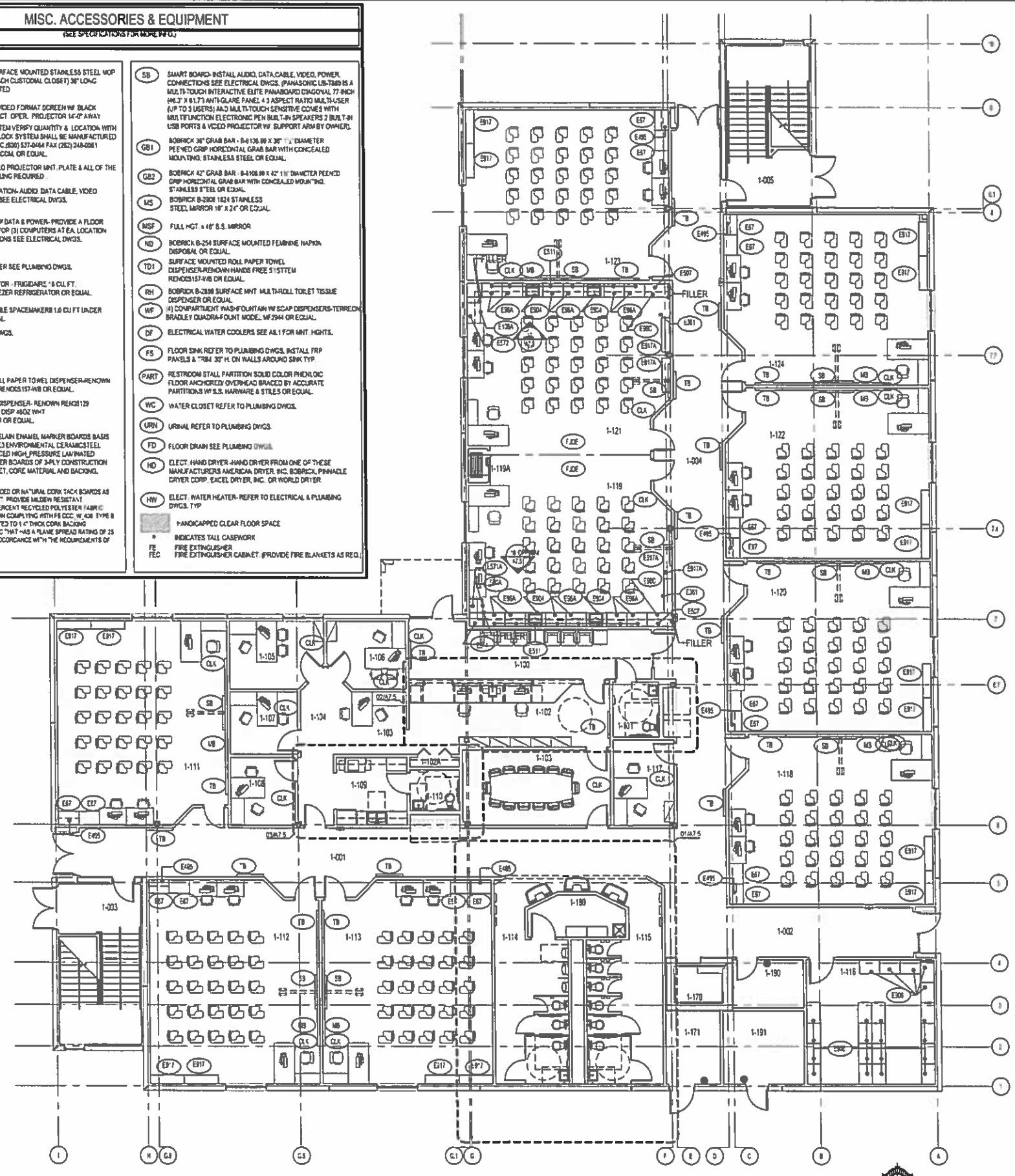

01 1st FLOOR EQUIP. PLAN- BLDG. 1

SCALE: 1/8"=1'-0"

ROOM CHART

ROOM NO	ROOM NAME	SF	ROOM NO	ROOM NAME	SF
1-001	CORRIDOR	696	1-200	CLASSROOM	736
1-002	CORRIDOR	281	1-201	IT LAB	636
1-003	STAIR	299	1-202	CLASSROOM	736
1-004	CORRIDOR	1075	1-203	IT LAB	625
1-005	STAIR	298	1-204	CLASSROOM	711
1-006	CORRIDOR	723	1-204A	STORAGE	82
1-007	CORRIDOR	1680	1-205	RESTROOM-BOYS	294
			1-206	RESTROOM-GIRLS	345
1-100	RECEPTION	299	1-207	CLASSROOM	749
1-101	RESTROOM	57	1-208	TEACHER PLANNING	126
1-102	ADMINISTRATION	301	1-208A	RESTROOM	44
1-102A	STORAGE	18	1-209	CLASSROOM	736
1-103	ADMINISTRATION	101	1-210	CONFERENCE	215
1-104	CORRIDOR	151	1-211	CLASSROOM	736
1-105	PRINCIPAL	127	1-212	CLASSROOM	736
1-106	GUIDANCE	100	1-213	CLASSROOM	736
1-107	BUSINESS MANAGER	92	1-214	CLASSROOM	736
1-108	GUIDANCE	96	1-215	CLASSROOM	736
1-109	WORK ROOM	186	1-216	CLASSROOM	736
1-110	RESTROOM	44			
1-111	CLASSROOM	736	1-268	CUSTODIAL	85
1-112	CLASSROOM	736	1-269	DATA	183
1-113	CLASSROOM	736			
1-114	RESTROOM-BOYS	294			
1-115	RESTROOM-GIRLS	398			
1-116	STORAGE	344			
1-117	ASSISTANT PRINCIPAL	113			
1-118	CLASSROOM	736			
1-119	CLASSROOM-SCIENCE	721			
1-120	CLASSROOM	736			
1-121	CLASSROOM-SCIENCE	731			
1-122	CLASSROOM	736			
1-123	CLASSROOM	736			
1-124	CLASSROOM	736			
1-170	ELEVATOR	82			
1-171	ELEVATOR EQUIPMENT	88			
1-190	CUSTODIAL	80			
1-190	DATA	73			
1-191	ELECTRICAL	128			

HARVARD•JOLLY
ARCHITECTURE

Ft. Lauderdale 954-486-7910
Ft. Myers 239-275-7774
Jacksonville 904-398-3300
Orlando 407-872-7777
Punta Gorda 941-575-0403
St. Petersburg 727-898-4611
Tampa 813-286-8200
Vero Beach/Stuart 561-478-4457
AA0001119
www.jollyarchitects.com
WEST PALM BEACH, FL

NEW CLASSROOM BUILDING
RIVIERA BEACH MARITIME ACADEMY
RIVIERA BEACH, FLORIDA
CONTRUCTION DOCUEMENTS

Comm. No	214031.00
Date:	09-24-14
Drawn:	
Reviewed:	

copyright 2014

René Torcilla AIA, REFP

A7.1

P:\T004\2 00\plan\A7.1.dwg, 10/6/2014 3:06:18 PM

MISC. ACCESSORIES & EQUIPMENT

(SEE SPECIFICATIONS FOR MORE INFO.)

- MH — MOP HOLDER- B-223 SURFACE MOUNTED STAINLESS STEEL MOP HOLDER (PROVIDE AT EACH CUSTODIAL CLOSET) 36" LONG UNLESS OTHERWISE NOTED
- VF-1 — 96"W X 72"H POWERED- VIDEO FORMAT SCREEN W/ BLACK MASKING BORDERS- ELECT. OPER. PROJECTOR 14'-0" AWAY
- CLK — CLOCK- GPS CLOCK SYSTEM VERIFY QUANTITY & LOCATION WITH PLANS. GPS WIRELESS CLOCK SYSTEM SHALL BE MANUFACTURED BY PRIMEX WIRELESS, INC.(800) 537-0464 FAX (252) 248-0081 WWW.PRIMEXWIRELESS.COM, OR EQUAL.
- VP — PROVIDE & INSTALL VIDEO PROJECTOR MNT. PLATE & ALL OF THE SYSTEMS WIRING & CABLING REQUIRED.
- SCS — SATELLITE CONTROL STATION- AUDIO DATA CABLE, VIDEO POWER. CONNECTIONS SEE ELECTRICAL DWGS.
- FJDE — FLOOR JUNCTION BOX W/ DATA & POWER- PROVIDE A FLOOR J-BOX DATA & POWER FOR (3) COMPUTERS AT EA. LOCATION SHOWN. FOR CONNECTIONS SEE ELECTRICAL DWGS.
- DF — ELECTRIC WATER COOLER SEE PLUMBING DWGS.
- REF — FULL SIZE REFRIGERATOR - FRIGIDAIRE - 8 CU. FT. FGHT 1846 KP TOP FREEZER REFRIGERATOR OR EQUAL
- MIC — MICROWAVE - GE PROFILE SPACEMAKER® 1.0 CU FT UNDER CABINET MNT. OR EQUAL.
- SINK — REFER TO PLUMBING DWGS.
- TD1 — SURFACE MOUNTED ROLL PAPER TOWEL DISPENSER-RENOWN HANDS FREE SYSTEM RENDS157-WB OR EQUAL.
- SD1 — WALL MOUNTED SOAP DISPENSER- RENOWN RENDS129 CLEAR VIEW BULK SOAP DISP 48OZ WHT LIQUID SOAP DISPENSER OR EQUAL.
- MB — MARKER BOARD- 4'x 4' PORCELAIN ENAMEL MARKER BOARDS BASIS OF DESIGN POLYVISION E3ENVIRONMENTAL CERAMICSTEEL SURFACE. PROVIDE BALANCED HIGH PRESSURE LAMINATED PORCELAIN ENAMEL MARKER BOARDS OF 3-PLY CONSTRUCTION CONSISTING OF FACE SHEET, CORE MATERIAL AND BACKING.
- TB — TACK BOARD- 4'X4' FABRIC FACED OR NATURAL CORK TACK BOARDS AS SELECTED BY THE ARCHITECT. PROVIDE MILDEW RESISTANT, WASHABLE, THICKPLY 100 PERCENT RECYCLED POLYESTER FABRIC WITH A PLAIN WEAVE PATTERN COMPLYING WITH FEDERAL SPEC. CCC-W-408 TYPE II MILDEW RESISTANT LAMINATED TO 1 4" THICK CORK BACKING SHEET. PROVIDE ONLY FABRIC THAT HAS A FLAME SPREAD RATING OF 25 OR LESS WHEN TESTED IN ACCORDANCE WITH THE REQUIREMENTS OF ASTM E 84.
- SB — SMART BOARD- INSTALL AUDIO, DATA CABLE, VIDEO, POWER. CONNECTIONS SEE ELECTRICAL DWGS. (PANASONIC UB-T880 IS A MULTI-TOUCH INTERACTIVE ELITE PANABOARD DIAGONAL 77-INCH (48.7" X 61.7") ANTI-GLARE PANEL 4:3 ASPECT RATIO MULTI-USER (UP TO 10USERS) AND MULTI-TOUCH SENSITIVE CONES WITH MULTIFUNCTION ELECTRONIC PEN BUILT-IN SPEAKERS 2 BUILT-IN USB PORTS & VIDEO PROJECTOR W/. SUPPORT ARM BY OWNER).
- GB1 — BOBRICK 36" GRAB BAR - B-6106.99 X 36" 1 ½" DIAMETER PEENED GRIP HORIZONTAL GRAB BAR WITH CONCEALED MOUNTING STAINLESS STEEL OR EQUAL.
- GB2 — BOBRICK 42" GRAB BAR B-6106.99 X 42" 1½" DIAMETER PEENED GRIP HORIZONTAL GRAB BAR WITH CONCEALED MOUNTING. 5" AINLESS STEEL OR EQUAL.
- MS — BOBRICK B-2908 1824 STAINLESS STEEL MIRROR 18" X 24" OR EQUAL.
- MSF — FULL HGT. x 48" S.S. MIRROR
- ND — BOBRICK B-254 SURFACE MOUNTED FEMININE NAPKIN DISPOSAL OR EQUAL.
- TD1 — SURFACE MOUNTED ROLL PAPER TOWEL DISPENSER-RENOWN HANDS FREE SYSTEM RENDS157-WB OR EQUAL.
- RH — BOBRICK B-2888 SURFACE MNT. MULTI-ROLL TOILET TISSUE DISPENSER OR EQUAL
- WF — (4) COMPARTMENT WASHFOUNTAIN W/ SOAP DISPENSERS-TERRACON BRADLEY QUADRA-FOUNT MODEL MF2944 OR EQUAL.
- DF — ELECTRICAL WATER COOLERS SEE A8.1 FOR MNT. HGHTS.
- FS — FLOOR SINK REFER TO PLUMBING DWGS. INSTALL FRP PANELS & TILE 30" H. ON WALLS AROUND SINK TYP.
- PART — RESTROOM STALL PARTITION SOLID COLOR PHENOLIC FLOOR ANCHORED OVERHEAD BRACED BY ACCURATE PARTITIONS W/ S.S. HARWARE & STILES OR EQUAL.
- WC — WATER CLOSET REFER TO PLUMBING DWGS.
- URN — URINAL REFER TO PLUMBING DWGS.
- FD — FLOOR DRAIN SEE PLUMBING DWGS.
- HD — ELECT. HAND DRYER-HAND DRYER FROM ONE OF THESE MANUFACTURERS AMERICAN DRYER, INC. BOBRICK, PINNACLE DRYER CORP, EXCEL DRYER, INC., OR WORLD DRYER.
- HW — ELECT. WATER HEATER- REFER TO ELECTRICAL & PLUMBING DWGS. TYP.
- HANDICAPPED CLEAR FLOOR SPACE
- * — INDICATES TALL CASEWORK
- FE — FIRE EXTINGUISHER
- FEC — FIRE EXTINGUISHER CABINET. (PROVIDE FIRE BLANKETS AS REQ.)

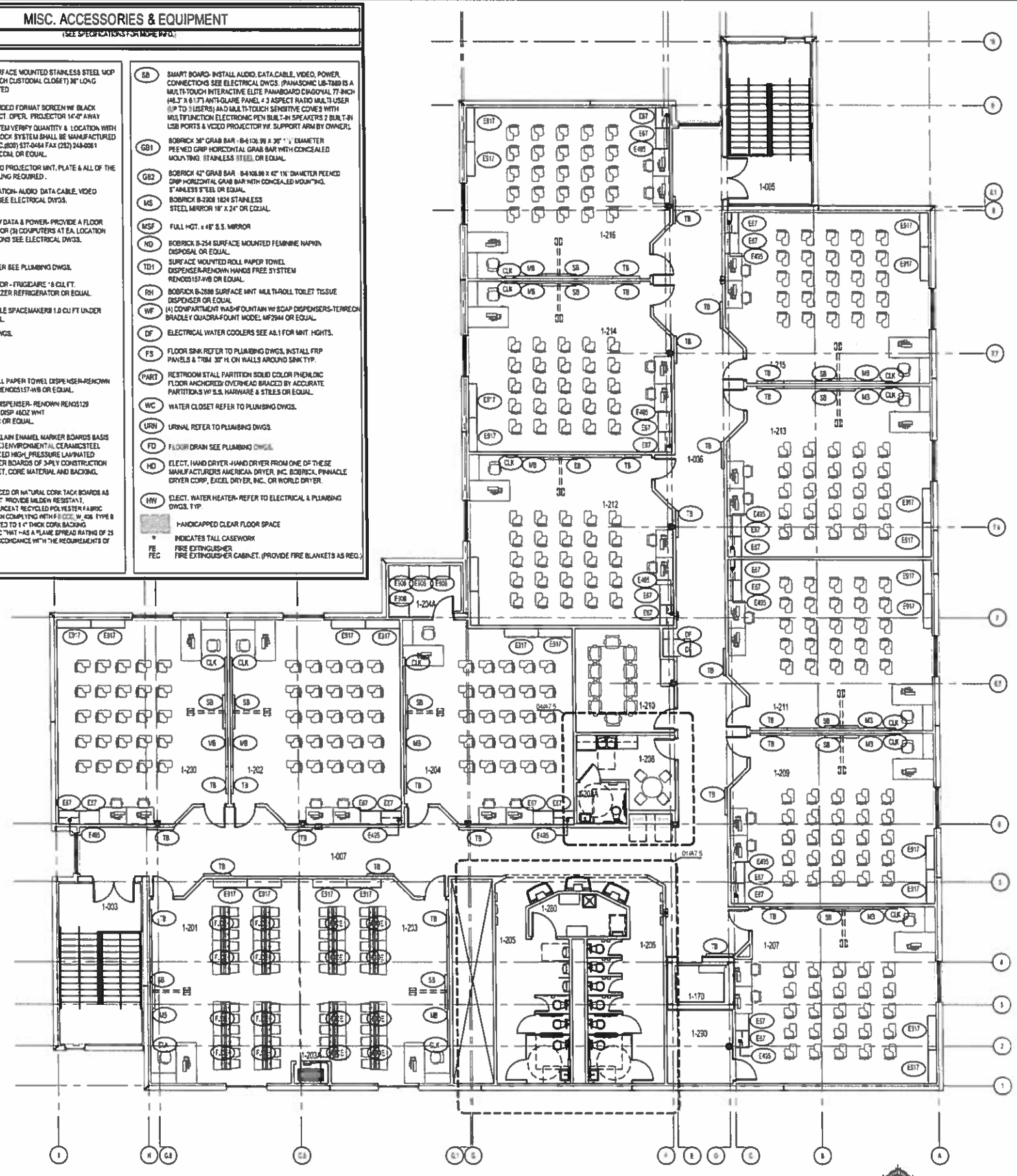

01 2nd FLOOR EQUIP. PLAN- BLDG. 1

SCALE: 1/8"=1'-0"

ROOM CHART

ROOM NO	ROOM NAME	SF	ROOM NO	ROOM NAME	SF
1-001	CORRIDOR	896	1-200	CLASSROOM	736
1-002	CORRIDOR	291	1-201	IT LAB	636
1-003	STAIR	239	1-202	CLASSROOM	736
1-004	CORRIDOR	1075	1-203	IT LAB	625
1-005	STAIR	298	1-204	CLASSROOM	711
1-006	CORRIDOR	725	1-204A	STORAGE	82
1-007	CORRIDOR	1088	1-207	RESTROOM-BOYS	294
			1-208	RESTROOM-GIRLS	305
1-100	RECEPTION	200	1-207	CLASSROOM	749
1-101	RESTROOM	87	1-208	TEACHER PLANNING	128
1-102	ADMINISTRATOR	301	1-208A	RESTROOM	44
1-102A	STORAGE	10	1-209	CLASSROOM	736
1-103	ADMINISTRATION	191	1-210	CONFERENCE	213
1-104	CORRIDOR	111	1-211	CLASSROOM	736
1-105	PRINCIPAL	132	1-212	CLASSROOM	736
1-106	GUIDANCE	188	1-213	CLASSROOM	736
1-107	BUSINESS MANAGER	82	1-214	CLASSROOM	736
1-108	GUIDANCE	86	1-215	CLASSROOM	736
1-109	MUSIC ROOM	188	1-216	CLASSROOM	736
1-110	RESTROOM	44			
1-111	CLASSROOM	736	1-258	CUSTODIAL	80
1-112	CLASSROOM	736	1-259	DATA	100
1-113	CLASSROOM	736			
1-114	RESTROOM-BOYS	294			
1-115	RESTROOM-GIRLS	305			
1-116	STORAGE	344			
1-117	ASSISTANT PRINCIPAL	113			
1-118	CLASSROOM	730			
1-119	CLASSROOM-SCIENCE	721			
1-120	CLASSROOM	730			
1-121	CLASSROOM-SCIENCE	731			
1-122	CLASSROOM	730			
1-123	CLASSROOM	736			
1-124	CLASSROOM	736			
1-170	ELEVATOR	53			
1-171	ELEVATOR EQUIPMENT	89			
1-180	CUSTODIAL	89			
1-190	DATA	72			
1-191	ELECTRICAL	129			

HARVARD•JOLLY
ARCHITECTURE
Ft. Lauderdale 954-486-7910
Ft. Myers 239-275-7774
Jacksonville 904-396-3300
Orlando 407-422-4477
Punta Gorda 941-575-0403
St. Petersburg 727-896-4611
Tampa 813-286-8000
Treasure Coast Region 561-478-4457
AA0003119
www.Harvardjolly.com
WEST PALM BEACH, FL

NEW CLASSROOM BUILDING
RIVIERA BEACH MARITIME ACADEMY
RIVIERA BEACH, FLORIDA
CONTRUCTION DOCUEMENTS

Contr. No: 214031.00
Date: 09-24-14
Drawn:
Revised:

copyright 2014

René Tercilla AIA, REFP

A7.2

P:\11004-2 CO\pdx\A7.2.dwg, 10/6/2014 3:08:55 PM

NOTE: HEIGHT SHOWN ARE TOP OF COUNTERS, ADJUST CABINET UNITS HEIGHT AS REQUIRED. ALL EXPOSED SIDES OF CASEWORK TO BE FINISHED LIKE THE FACE OF CASEWORK, TYP.

SINK BASE CABINETS

DESCRIPTION: SINK BASE UNIT WITH ONE DOOR HINGED LEFT. SERVICES, HOT AND COLD WATER

ITEM	SIZE
E160	24"Wx30"Hx24"D
E161	21"Wx30"Hx24"D
E162	18"Wx30"Hx24"D

DESCRIPTION: SINK BASE UNIT WITH TWO HINGED DOORS. SERVICES, HOT AND COLD WATER

ITEM	SIZE
E163	48"Wx28"Hx24"D
E164	45"Wx28"Hx24"D
E165	42"Wx28"Hx24"D
E166	39"Wx28"Hx24"D
E166A	36"Wx24"Hx30"D
E167	36"Wx28"Hx24"D
E167A	36"Wx24"Hx24"D
E168	33"Wx28"Hx24"D
E169	30"Wx28"Hx24"D
E170	27"Wx28"Hx24"D

DESCRIPTION: SINK BASE UNIT WITH ONE DOOR HINGED RIGHT. SERVICES, HOT AND COLD WATER

ITEM	SIZE
E171	24"Wx28"Hx24"D
E172	21"Wx28"Hx24"D
E173	18"Wx28"Hx24"D

DESCRIPTION: SINK BASE UNIT WITH ONE DOOR HINGED LEFT. SERVICES, HOT AND COLD WATER

ITEM	SIZE
E174	24"Wx28"Hx24"D
E175	21"Wx28"Hx24"D
E176	18"Wx28"Hx24"D

DRAWER CABINETS

FILE CABINETS

DESCRIPTION: FILE DRAWER UNIT WITH FOLLOWERS, ONE FILE DRAWER AND TWO TOP DRAWERS.

ITEM	SIZE
E337	21"Wx30"Hx24"D (LEGAL SIZE)
E338	18"Wx30"Hx24"D (LETTER SIZE)
E338A	15"Wx30"Hx24"D (LETTER SIZE)

DESCRIPTION: FILE DRAWER UNIT WITH FOLLOWERS, ONE FILE DRAWER AND THREE TOP DRAWERS.

ITEM	SIZE
E339	21"Wx34"Hx24"D (LEGAL SIZE)
E340	18"Wx34"Hx24"D (LETTER SIZE)

DESCRIPTION: FILE DRAWER UNIT WITH FOLLOWERS, AND TWO EQUAL DRAWERS.

ITEM	SIZE
E341	21"Wx30"Hx24"D (LEGAL SIZE)
E342	18"Wx30"Hx24"D (LETTER SIZE)
E342A	15"Wx30"Hx30"D

DESCRIPTION: FILE DRAWER UNIT WITH FOLLOWERS, TWO EQUAL DRAWERS AND ONE TOP DRAWER.

ITEM	SIZE
E343	21"Wx34"Hx24"D (LEGAL SIZE)
E344	18"Wx34"Hx24"D (LETTER SIZE)

DESCRIPTION: FILE DRAWER UNIT WITH FOLLOWERS AND 3 EQUAL DRAWERS.

ITEM	SIZE
E345	21"Wx42"Hx24"D (LEGAL SIZE)
E346	18"Wx42"Hx24"D (LETTER SIZE)

DESCRIPTION: DRAWER UNIT WITH FIVE EQUAL DRAWERS.

ITEM	SIZE
E316	48"Wx30"Hx24"D
E317	42"Wx30"Hx24"D
E318	36"Wx30"Hx24"D
E319	30"Wx30"Hx24"D
E320	24"Wx30"Hx24"D
E321	18"Wx30"Hx24"D
E322	12"Wx30"Hx24"D

SINK BASE CABINETS

DESCRIPTION: SINK BASE UNIT WITH TWO HINGED DOORS, AND ONE BLANK DRAWER PANEL. SERVICES, HOT AND COLD WATER

ITEM	SIZE
E107	48"Wx34"Hx24"D
E108	45"Wx34"Hx24"D
E109	42"Wx34"Hx24"D
E110	39"Wx34"Hx24"D
E111	36"Wx34"Hx24"D
E112	33"Wx34"Hx24"D
E113	30"Wx34"Hx24"D
E114	27"Wx34"Hx24"D

DESCRIPTION: SINK BASE UNIT WITH ONE DOOR HINGED RIGHT, AND ONE BLANK DRAWER PANEL. SERVICES, HOT AND COLD WATER

ITEM	SIZE
E115	24"Wx34"Hx24"D
E116	21"Wx34"Hx24"D
E117	18"Wx34"Hx24"D

DESCRIPTION: SINK BASE UNIT WITH ONE DOOR HINGED LEFT, AND ONE BLANK DRAWER PANEL. SERVICES, HOT AND COLD WATER

ITEM	SIZE
E118	24"Wx34"Hx24"D
E119	21"Wx34"Hx24"D
E120	18"Wx34"Hx24"D

DESCRIPTION: SINK BASE UNIT WITH TWO HINGED DOORS, AND ONE BLANK DRAWER PANEL. SERVICES, HOT AND COLD WATER

ITEM	SIZE
E121	48"Wx30"Hx24"D
E122	45"Wx30"Hx24"D
E123	42"Wx30"Hx24"D
E124	39"Wx30"Hx24"D
E125	36"Wx30"Hx24"D
E125A	36"Wx24"Hx24"D
E126	33"Wx30"Hx24"D
E127	30"Wx30"Hx24"D
E128	27"Wx30"Hx24"D

DESCRIPTION: SINK BASE UNIT WITH ONE DOOR HINGED RIGHT, AND ONE BLANK DRAWER PANEL. SERVICES, HOT AND COLD WATER

ITEM	SIZE
E129	24"Wx30"Hx24"D
E130	21"Wx30"Hx24"D
E131	18"Wx30"Hx24"D

SINK BASE CABINETS

DESCRIPTION: SINK BASE UNIT WITH ONE DOOR HINGED LEFT, AND ONE BLANK DRAWER PANEL. SERVICES, HOT AND COLD WATER

ITEM	SIZE
E132	24"Wx30"Hx24"D
E133	21"Wx30"Hx24"D
E134	18"Wx30"Hx24"D

DESCRIPTION: SINK BASE UNIT WITH TWO HINGED DOORS. SERVICES, HOT AND COLD WATER

ITEM	SIZE	ITEM	SIZE
E135	48"Wx34"Hx24"D	E148	48"Wx30"Hx24"D
E135A	48"Wx34"Hx24"D	E148A	48"Wx30"Hx24"D
E135B	45"Wx34"Hx29"D	E148B	36"Wx30"Hx30"D
E136	45"Wx34"Hx24"D	E150	45"Wx30"Hx24"D
E137	42"Wx34"Hx24"D	E151	42"Wx30"Hx24"D
E137A	42"Wx34"Hx24"D	E152	39"Wx30"Hx24"D
E138	39"Wx34"Hx24"D	E153	36"Wx30"Hx24"D
E139	36"Wx34"Hx24"D	E154	33"Wx30"Hx24"D
E139A	36"Wx34"Hx24"D	E155	30"Wx30"Hx24"D
E140	33"Wx34"Hx24"D	E156	27"Wx30"Hx24"D
E141	30"Wx34"Hx24"D		
E142	27"Wx34"Hx24"D		

DESCRIPTION: SINK BASE UNIT WITH ONE DOOR HINGED RIGHT. SERVICES, HOT AND COLD WATER

ITEM	SIZE
E143	24"Wx34"Hx24"D
E144	21"Wx34"Hx24"D
E145	18"Wx34"Hx24"D

DESCRIPTION: SINK BASE UNIT WITH ONE DOOR HINGED LEFT. SERVICES, HOT AND COLD WATER

ITEM	SIZE
E146	24"Wx34"Hx24"D
E147	21"Wx34"Hx24"D
E148	18"Wx34"Hx24"D

DESCRIPTION: SINK BASE UNIT WITH ONE DOOR HINGED RIGHT. SERVICES, HOT AND COLD WATER

ITEM	SIZE
E157	24"Wx30"Hx24"D
E158	21"Wx30"Hx24"D
E159	18"Wx30"Hx24"D

DESCRIPTION: BASE UNIT WITH ONE DRAWER, ONE ADJUSTABLE SHELF, & TWO HINGED DOORS.

ITEM	SIZE
E81	48"Wx30"Hx24"D
E82	45"Wx30"Hx24"D
E83	42"Wx30"Hx24"D
E84	39"Wx30"Hx24"D
E85	36"Wx30"Hx24"D
E86	33"Wx30"Hx24"D
E87	30"Wx30"Hx24"D
E88	27"Wx30"Hx24"D

DESCRIPTION: BASE UNIT WITH TWO EQUAL DRAWERS, ONE ADJUSTABLE SHELF, & TWO HINGED DOORS.

ITEM	SIZE
E89	48"Wx30"Hx24"D
E89A	48"Wx34"Hx24"D
E90	45"Wx30"Hx24"D
E91	42"Wx30"Hx24"D
E92	39"Wx30"Hx24"D
E93	24"Wx30"Hx24"D
E93A	24"Wx34"Hx24"D
E94	33"Wx30"Hx24"D
E95	36"Wx30"Hx24"D
E95B	36"Wx24"Hx24"D
E96	30"Wx30"Hx24"D
E96A	36"Wx34"Hx24"D
E96B	36"Wx34"Hx24"D
E96C	48"Wx34"Hx24"D

DESCRIPTION: BASE UNIT WITH ONE DRAWER, ONE ADJUSTABLE SHELF AND ONE DOOR HINGED RIGHT.

ITEM	SIZE
E97	24"Wx34"Hx24"D
E97A	24"Wx34"Hx24"D
E98	21"Wx30"Hx24"D
E98A	21"Wx24"Hx24"D
E99	18"Wx30"Hx24"D
E99A	15"Wx24"Hx24"D
E100	15"Wx30"Hx24"D

DESCRIPTION: BASE UNIT WITH ONE DRAWER, ONE ADJUSTABLE SHELF AND ONE DOOR HINGED LEFT.

ITEM	SIZE
E101	24"Wx30"Hx24"D
E102	21"Wx30"Hx24"D
E102A	21"Wx34"Hx24"D
E103	18"Wx30"Hx24"D
E104	15"Wx30"Hx24"D

DESCRIPTION: BLIND CORNER BASE UNIT (LEFT SIDE EXPOSED) WITH ONE DRAWER, ONE ADJUST. SHELF, AND ONE DOOR HINGED RIGHT.

ITEM	SIZE
E105	45"Wx30"Hx24"D

DESCRIPTION: BLIND CORNER BASE UNIT (RIGHT SIDE EXPOSED) WITH ONE DRAWER, ONE ADJUST. SHELF, AND ONE DOOR HINGED LEFT.

ITEM	SIZE
E106	45"Wx30"Hx24"D

DESCRIPTION: BLIND CORNER BASE UNIT (RIGHT SIDE EXPOSED) WITH ONE DRAWER, ONE ADJUST. SHELF AND (2) DOORS

ITEM	SIZE
E106A	60"Wx34"Hx24"D

DESCRIPTION: TALL STORAGE LOCKABLE UNIT WITH FIVE ADJUSTABLE SHELVES AND TWO HINGED DOORS.

ITEM	SIZE
E349	48"Wx84"Hx24"D
E348A	72"Wx96"Hx24"D
E348B	48"Wx84"Hx29"D
E348C	60"Wx108"Hx36"D
E350	45"Wx84"Hx24"D
E351	42"Wx84"Hx24"D
E352	39"Wx84"Hx24"D
E353	36"Wx84"Hx36"D
E353A	36"Wx84"Hx30"D
E353B	36"Wx84"Hx24"D
E353C	34"Wx108"Hx24"D
E354	33"Wx84"Hx24"D
E355	30"Wx84"Hx24"D
E356	27"Wx84"Hx24"D
E356A	24"Wx84"Hx24"D
E357	45"Wx84"Hx14"D
E358	42"Wx84"Hx14"D
E359	39"Wx84"Hx14"D
E360	36"Wx84"Hx14"D
E361	33"Wx84"Hx14"D
E362	30"Wx84"Hx14"D
E364	27"Wx84"Hx14"D

BASE CABINETS

DESCRIPTION: BASE UNIT WITH ONE ADJUSTABLE SHELF AND TWO HINGED DOORS.

ITEM	SIZE
E37	48"Wx28"Hx24"D
E38	45"Wx28"Hx24"D
E39	42"Wx28"Hx24"D
E40	39"Wx28"Hx24"D
E40A	36"Wx24"Hx30"D
E41	36"Wx28"Hx24"D
E41A	36"Wx24"Hx24"D
E42	33"Wx28"Hx24"D
E43	30"Wx28"Hx24"D
E44	27"Wx28"Hx24"D

DESCRIPTION: BASE UNIT WITH ONE ADJUSTABLE SHELF AND ONE DOOR HINGED RIGHT.

ITEM	SIZE
E45	24"Wx28"Hx24"D
E46	21"Wx28"Hx24"D
E47	18"Wx28"Hx24"D
E48	15"Wx28"Hx24"D

DESCRIPTION: BASE UNIT WITH ONE ADJUSTABLE SHELF AND ONE DOOR HINGED LEFT.

ITEM	SIZE
E49	24"Wx28"Hx24"D
E50	21"Wx28"Hx24"D
E51	18"Wx28"Hx24"D
E52	15"Wx28"Hx24"D

DESCRIPTION: BLIND CORNER BASE UNIT (LEFT SIDE EXPOSED) WITH ONE ADJUSTABLE SHELF & ONE DOOR HINGED RIGHT.

ITEM	SIZE
E53	45"Wx28"Hx24"D

DESCRIPTION: BLIND CORNER BASE UNIT (RIGHT SIDE EXPOSED) WITH ONE ADJUSTABLE SHELF & ONE DOOR HINGED LEFT.

ITEM	SIZE
E54	45"Wx34"Hx24"D

DESCRIPTION: BASE UNIT WITH ONE DRAWER, ONE ADJUSTABLE SHELF & TWO HINGED DOORS.

ITEM	SIZE
E55	48"Wx34"Hx24"D
E56	45"Wx34"Hx24"D
E57	42"Wx34"Hx24"D
E58	39"Wx34"Hx24"D
E59	36"Wx34"Hx24"D
E60	33"Wx34"Hx24"D
E61	30"Wx34"Hx24"D
E62	27"Wx34"Hx24"D

BASE CABINETS

DESCRIPTION: BASE UNIT WITH TWO EQUAL DRAWERS, ONE ADJUSTABLE SHELF & TWO HINGED DOORS.

ITEM	SIZE
E63	48"Wx34"Hx24"D
E64	45"Wx34"Hx24"D
E65	42"Wx34"Hx24"D
E66	39"Wx34"Hx24"D
E67	36"Wx34"Hx24"D
E68	33"Wx34"Hx24"D
E69	30"Wx34"Hx24"D
E70	27"Wx34"Hx24"D

DESCRIPTION: BASE UNIT WITH ONE DRAWER, ONE ADJUSTABLE SHELF AND ONE DOOR HINGED RIGHT.

ITEM	SIZE
E71	24"Wx34"Hx24"D
E72	21"Wx34"Hx24"D
E73	18"Wx34"Hx24"D
E74	15"Wx34"Hx24"D
E74A	18"Wx34"Hx30"D

DESCRIPTION: BASE UNIT WITH ONE DRAWER, ONE ADJUSTABLE SHELF AND ONE DOOR HINGED LEFT.

ITEM	SIZE
E75	24"Wx34"Hx24"D
E76	21"Wx34"Hx24"D
E77	18"Wx34"Hx24"D
E78	15"Wx34"Hx24"D

DESCRIPTION: BLIND CORNER BASE UNIT (LEFT SIDE EXPOSED) WITH ONE DRAWER, ONE ADJUST. SHELF AND ONE DOOR HINGED RIGHT.

ITEM	SIZE
E79	45"Wx34"Hx24"D

DESCRIPTION: BLIND CORNER BASE UNIT (RIGHT SIDE EXPOSED) WITH ONE DRAWER, ONE ADJUST. SHELF AND ONE DOOR HINGED LEFT.

ITEM	SIZE
E80	45"Wx34"Hx24"D
E80A	48"Wx34"Hx24"D

DESCRIPTION: BASE UNIT WITH ONE ADJUSTABLE SHELF AND TWO HINGED DOORS.

ITEM	SIZE
E1	48"Wx34"Hx24"D
E1A	48"Wx34"Hx30"D
E2	45"Wx34"Hx24"D
E3	42"Wx34"Hx24"D
E4	39"Wx34"Hx24"D
E5	36"Wx34"Hx24"D
E5A	36"Wx34"Hx36"D
E6	33"Wx34"Hx24"D
E7	30"Wx34"Hx24"D
E8	27"Wx34"Hx24"D

DESCRIPTION: BASE UNIT WITH ONE ADJUSTABLE SHELF AND ONE DOOR HINGED RIGHT.

ITEM	SIZE
E9	24"Wx34"Hx24"D
E10	21"Wx34"Hx24"D
E11	18"Wx34"Hx24"D
E12	15"Wx34"Hx24"D

DESCRIPTION: BASE UNIT WITH ONE ADJUSTABLE SHELF AND ONE DOOR HINGED LEFT.

ITEM	SIZE
E13	24"Wx34"Hx24"D
E14	21"Wx34"Hx24"D
E15	18"Wx34"Hx24"D
E16	15"Wx34"Hx24"D

DESCRIPTION: BLIND CORNER BASE UNIT (LEFT SIDE EXPOSED) WITH ONE ADJUSTABLE SHELF & ONE DOOR HINGED RIGHT.

ITEM	SIZE
E17	45"Wx34"Hx24"D
E17A	48"Wx34"Hx24"D

DESCRIPTION: BLIND CORNER BASE UNIT (RIGHT SIDE EXPOSED) WITH ONE ADJUSTABLE SHELF & ONE DOOR HINGED LEFT.

ITEM	SIZE
E18	45"Wx34"Hx24"D
E18A	48"Wx34"Hx24"D

BASE CABINETS

DESCRIPTION: BASE UNIT WITH ONE ADJUSTABLE SHELF AND TWO HINGED DOORS. 8 - TWO SLIDING DOORS. TWO HINGED DOORS.

ITEM	SIZE
E19	48"Wx30"Hx24"D
E19A	48"Wx30"Hx30"D
E19B	36"Wx30"Hx30"D
E20	45"Wx30"Hx24"D
E21	42"Wx30"Hx24"D
E22	39"Wx30"Hx24"D
E23	36"Wx30"Hx24"D
E24	33"Wx30"Hx24"D
E25	30"Wx30"Hx24"D
E26	27"Wx30"Hx24"D

DESCRIPTION: BASE UNIT WITH ONE ADJUSTABLE SHELF AND ONE DOOR HINGED RIGHT.

ITEM	SIZE
E27	24"Wx30"Hx24"D
E27A	24"Wx30"Hx18"D
E28	21"Wx30"Hx24"D
E29	18"Wx30"Hx24"D
E30	15"Wx30"Hx24"D

DESCRIPTION: BASE UNIT WITH ONE ADJUSTABLE SHELF AND ONE DOOR HINGED LEFT.

ITEM	SIZE
E31	24"Wx30"Hx24"D
E32	21"Wx30"Hx24"D
E33	18"Wx30"Hx24"D
E34	15"Wx30"Hx24"D

DESCRIPTION: BLIND CORNER BASE UNIT (LEFT SIDE EXPOSED) WITH ONE ADJUSTABLE SHELF & ONE DOOR HINGED RIGHT.

ITEM	SIZE
E35	45"Wx30"Hx24"D

DESCRIPTION: BLIND CORNER BASE UNIT (RIGHT SIDE EXPOSED) WITH ONE ADJUSTABLE SHELF & ONE DOOR HINGED LEFT.

ITEM	SIZE
E36	45"Wx30"Hx24"D

DESCRIPTION: BASE UNIT WITH (3) GRADUATED DRAWERS, ONE ADJUSTABLE SHELF & ONE HINGED DOOR.

ITEM	SIZE
E36A	36"Wx34"Hx24"D

WALL CABINETS

DESCRIPTION: WALL UNIT WITH ONE ADJUSTABLE SHELF AND ONE DOOR HINGED RIGHT

ITEM	SIZE
E515	24"Wx30"Hx14"D
E516	21"Wx30"Hx14"D
E517	18"Wx30"Hx14"D
E518	15"Wx30"Hx14"D

DESCRIPTION: WALL UNIT WITH ONE ADJUSTABLE SHELF AND ONE DOOR HINGED LEFT.

ITEM	SIZE	
E519	24"Wx30"Hx14"D	
E519A	24"Wx30"Hx18"D	(2-ADJ. SHELVES)
E520	21"Wx30"Hx14"D	
E521	18"Wx30"Hx14"D	
E521A	18"Wx30"Hx18"D	
E522	15"Wx30"Hx14"D	

DESCRIPTION: WALL UNIT WITH ONE ADJUSTABLE SHELF AND TWO HINGED DOORS. * EXPOSED END

ITEM	SIZE
E523	48"Wx24"Hx14"D *
E523A	48"Wx24"Hx12"D
E523A	48"Wx24"Hx18"D
E524	45"Wx24"Hx14"D
E525	42"Wx24"Hx14"D
E526	39"Wx24"Hx14"D
E526A	36"Wx24"Hx12"D
E527	36"Wx24"Hx14"D
E527A	36"Wx24"Hx14"D
E527B	36"Wx24"Hx18"D
E527C	36"Wx24"Hx18"D
E528	33"Wx24"Hx14"D
E529	30"Wx24"Hx14"D
E530	27"Wx24"Hx14"D

DESCRIPTION: WALL UNIT WITH ONE ADJUSTABLE SHELF AND ONE DOOR HINGED RIGHT.

ITEM	SIZE
E531	24"Wx24"Hx14"D
E532	21"Wx24"Hx14"D
E533	18"Wx24"Hx14"D
E534	15"Wx24"Hx14"D

DESCRIPTION: WALL UNIT WITH ONE ADJUSTABLE SHELF AND ONE DOOR HINGED LEFT.

ITEM	SIZE
E535	24"Wx24"Hx14"D
E535A	24"Wx24"Hx18"D
E536	21"Wx24"Hx14"D
E537	18"Wx24"Hx14"D
E538	15"Wx24"Hx14"D

WALL CABINETS

DESCRIPTION: WALL UNIT WITH TWO HINGED DOORS.

ITEM	SIZE
E539	48"Wx18"Hx14"D
E540	45"Wx18"Hx14"D
E541	42"Wx18"Hx14"D
E542	39"Wx18"Hx14"D
E543	36"Wx18"Hx14"D
E544	33"Wx18"Hx14"D
E545	30"Wx18"Hx14"D
E546	27"Wx18"Hx14"D

DESCRIPTION: WALL UNIT WITH ONE DOOR HINGED RIGHT.

ITEM	SIZE
E547	24"Wx18"Hx14"D
E548	21"Wx18"Hx14"D
E549	18"Wx18"Hx14"D
E550	15"Wx18"Hx14"D

DESCRIPTION: WALL UNIT WITH ONE DOOR HINGED LEFT

ITEM	SIZE
E551	24"Wx18"Hx14"D
E552	21"Wx18"Hx14"D
E553	18"Wx18"Hx14"D
E554	15"Wx18"Hx14"D

DESCRIPTION: WALL UNIT WITH TWO HINGED DOORS.

ITEM	SIZE
E555	48"Wx15"Hx14"D
E555A	48"Wx15"Hx18"D
E556	45"Wx15"Hx14"D
E557	42"Wx15"Hx14"D
E557A	42"Wx18"Hx18"D
E558	39"Wx15"Hx14"D
E559	36"Wx15"Hx14"D
E559A	36"Wx18"Hx18"D
E559B	36"Wx12"Hx14"D
E560	33"Wx15"Hx14"D
E561	30"Wx15"Hx14"D
E562	27"Wx15"Hx14"D

DESCRIPTION: WALL UNIT WITH ONE DOOR HINGED RIGHT.

ITEM	SIZE
E563	24"Wx15"Hx14"D
E564	21"Wx15"Hx14"D
E565	18"Wx15"Hx14"D
E566	15"Wx15"Hx14"D

DESCRIPTION: WALL UNIT WITH ONE DOOR HINGED LEFT

ITEM	SIZE
E567	24"Wx15"Hx14"D
E568	21"Wx15"Hx14"D
E569	18"Wx15"Hx14"D
E570	15"Wx15"Hx14"D

WALL CABINETS

DESCRIPTION: WALL UNIT WITH TWO ADJUSTABLE SHELVES AND TWO HINGED DOORS.

ITEM	SIZE
E475	48"Wx42"Hx14"D
E476	45"Wx42"Hx14"D
E477	42"Wx42"Hx14"D
E478	39"Wx42"Hx14"D
E479	36"Wx42"Hx14"D
E480	33"Wx42"Hx14"D
E481	30"Wx42"Hx14"D
E482	27"Wx42"Hx14"D

DESCRIPTION: WALL UNIT WITH TWO ADJUSTABLE SHELVES AND ONE DOOR HINGED RIGHT.

ITEM	SIZE
E483	24"Wx42"Hx14"D
E484	21"Wx42"Hx14"D
E485	18"Wx42"Hx14"D
E485A	15"Wx50"Hx14"D
E485B	15"Wx54"Hx14"D
E485C	15"Wx56"Hx14"D
E485D	18"Wx60"Hx14"D
E486	15"Wx42"Hx14"D
E486A	15"Wx48"Hx14"D
E486B	18"Wx42"Hx14"D

DESCRIPTION: WALL UNIT WITH TWO ADJUSTABLE SHELVES AND ONE DOOR HINGED LEFT.

ITEM	SIZE
E487	24"Wx54"Hx14"D
E488	21"Wx42"Hx14"D
E489	18"Wx42"Hx14"D
E489A	15"Wx54"Hx14"D
E489B	15"Wx50"Hx14"D
E489C	15"Wx56"Hx14"D
E489D	18"Wx60"Hx14"D
E490	15"Wx42"Hx14"D
E490A	15"Wx48"Hx14"D
E490B	18"Wx42"Hx14"D

DESCRIPTION: WALL UNIT WITH TWO ADJUSTABLE SHELVES AND TWO HINGED DOORS.

ITEM	SIZE
E491	48"Wx36"Hx14"D
E492	45"Wx36"Hx14"D
E493	42"Wx36"Hx14"D
E494	39"Wx36"Hx14"D
E495	36"Wx36"Hx14"D
E496	33"Wx36"Hx14"D
E497	30"Wx36"Hx14"D
E498	27"Wx36"Hx14"D
E498A	36"Wx36"Hx18"D
E498B	30"Wx36"Hx14"D
E498C	30"Wx54"Hx14"D
E498A	36"Wx54"Hx14"D

DESCRIPTION: WALL UNIT WITH TWO ADJUSTABLE SHELVES AND ONE DOOR HINGED RIGHT.

ITEM	SIZE
E499	24"Wx36"Hx14"D
E500	21"Wx36"Hx14"D
E500A	21"Wx30"Hx14"D
E501	18"Wx36"Hx14"D
E502	15"Wx36"Hx14"D

DESCRIPTION: WALL UNIT WITH TWO ADJUSTABLE SHELVES AND ONE DOOR HINGED LEFT.

ITEM	SIZE
E503	24"Wx36"Hx14"D
E503A	24"Wx30"Hx14"D
E504	21"Wx30"Hx14"D
E505	18"Wx30"Hx14"D
E506	15"Wx36"Hx14"D
E506A	15"Wx36"Hx14"D

DESCRIPTION: WALL UNIT WITH ONE ADJUSTABLE SHELF AND TWO HINGED DOORS.

ITEM	SIZE	
E507	44"Wx30"Hx14"D	
E507A	48"Wx30"Hx18"D	(2-ADJ. SHELVES)
E508	45"Wx30"Hx14"D	
E509	42"Wx30"Hx14"D	
E509A	42"Wx30"Hx18"D	(2-ADJ. SHELVES)
E510	39"Wx30"Hx14"D	
E511	36"Wx30"Hx14"D	
E511A	36"Wx30"Hx18"D	(2-ADJ. SHELVES)
E511B	36"Wx30"Hx18"D	(2-ADJ. SHELVES)
E512	33"Wx30"Hx18"D	LOCKED CABINET
E513	30"Wx30"Hx14"D	(2-ADJ. SHELVES)
E513A	30"Wx30"Hx18"D	(2-ADJ. SHELVES)
E514	27"Wx30"Hx14"D	
E514A	24"Wx30"Hx14"D	

DESCRIPTION: WALL CORNER UNIT WITH ONE ADJUSTABLE SHELF AND ONE DOOR WITH A CONTINUOUS PIANO HINGE AT DOOR CENTER.

ITEM	SIZE
E571	24"Wx30"Hx14"D
E571A	48"Wx30"Hx14"D

SECTION A

SECTION B

ITEM	SIZE
E571B	42"Wx30"Hx24"D

DESCRIPTION: WALL CORNER UNIT WITH ONE ADJUSTABLE SHELF AND ONE DOOR WITH A CONTINUOUS PIANO HINGE AT DOOR CENTER.

ITEM	SIZE	
E572	36"Wx30"Hx14"D	
E572A	23"Wx36"Hx26"D	NO DOOR OPEN CAB.
E572B	36"Wx54"Hx14"D	

DESCRIPTION: WALL CORNER UNIT WITH ONE ADJUSTABLE SHELF AND ONE DOOR WITH A CONTINUOUS PIANO HINGE AT DOOR CENTER.

ITEM	SIZE
E572C	36"Wx30"Hx14"D

DESCRIPTION: WALL CORNER UNIT WITH TWO ADJUSTABLE SHELVES AND A DOOR HINGED RIGHT.

ITEM	SIZE
E573	24"Wx30"Hx24"D

DESCRIPTION: WALL CORNER UNIT WITH TWO ADJUSTABLE SHELVES AND A DOOR HINGED LEFT.

ITEM	SIZE
E574	24"Wx30"Hx24"D

NOTE: ALL CASEWORK TO BE LOCKABLE ON PROJECT. VERIFY WITH OWNER THE KEY SEQUENCE. ALL EXPOSED SURFACES TO BE LAMINATED.

HARVARD•JOLLY ARCHITECTURE

Ft. Lauderdale 954-486-7910
Ft. Myers 239-275-7774
Jacksonville 904-396-3300
Orlando 407-667-7727
Punta Gorda 941-575-0403
St. Petersburg 727-896-4611
Tampa 813-286-8206
West Palm Beach 561-478-4457
AAC000119
www.HarvardJolly.com
WEST PALM BEACH, FL

NEW CLASSROOM BUILDING
RIVIERA BEACH MARITIME ACADEMY
RIVIERA BEACH, FLORIDA
CONTRUCTION DOCUEMENTS

Comm. No: 214031.00
Date: 09-24-14
Drawn:
Revised:

copyright 2014

René Terrella AIA, REFP

A7.3

MISCELLANEOUS

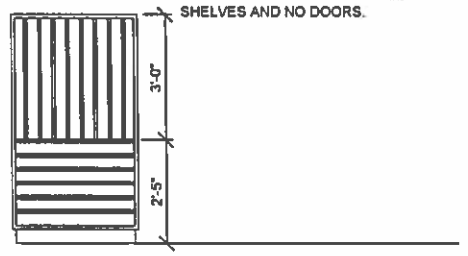

DESCRIPTION
TALL OPEN SHELVING UNIT WITH REMOVABLE ADJUSTABLE SHELVES AND NO DOORS.

ITEM	SIZE
E900	36"Wx65"Hx24I"D

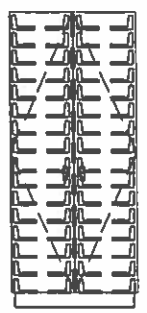

DESCRIPTION
TALL TOTE TRAY STORAGE WITH 32 #0004 TRAYS (16"Wx3 5/8"Hx13"D) AND TWO HINGED DOORS.

ITEM	SIZE
E901	36"Wx84"Hx15"D

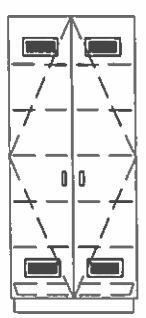

DESCRIPTION
DRY STORAGE UNIT WITH FIVE PERFORATED SHELVES (#0507), ONE DRIP PAN, AND TWO HINGED DOORS WITH LOUVERS.

DRY STORAGE UNIT WITH REMOVABLE ADJUSTABLE SHELVES AND TWO HINGED DOORS WITH LOUVERS.

ITEM	SIZE
E902	36"Wx84"Hx24"D
E903	36"Wx84"Hx30"D

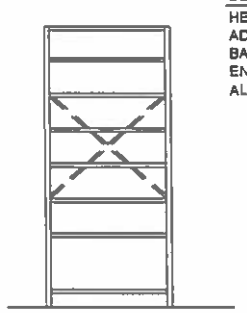

DESCRIPTION
HEAVY DUTY METAL OPEN ADJUSTABLE SHELVING W/ BAKED ENAMEL FINISH END PANELS BETWEEN ALL UNITS AND @ ENDS

ITEM	SIZE
E905	36"Wx84"Hx18"D
E905A	48"Wx84"Hx18"D
E905B	30"Wx84"Hx18"D
E906	36"Wx84"Hx12"D
E907	36"Wx84"Hx24"D
E907A	36"Wx107"Hx36"D
E907B	24"Wx107"Hx12"D
E907C	26"Wx48"Hx12"D MTD. FROM MID WALL TO CLG.

DESCRIPTION
HANDICAPPED ACCESSIBLE BASE CABINET TO ACCOMODATE A STAINLESS STEEL SINK.

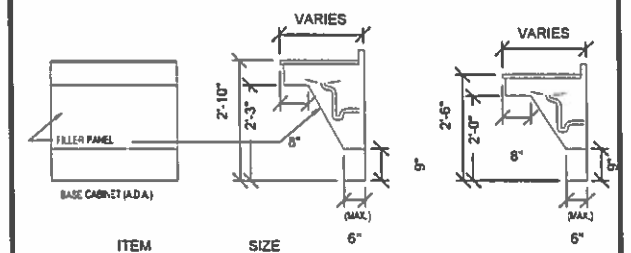

ITEM	SIZE
E904	36"Wx34"Hx24"D
E904A	36"Wx34"Hx30"D
E904B	48"Wx34"Hx24"D
E904C	36"Wx30"Hx24"D
E904D	48"Wx30"Hx30"D
E904E	36"Wx24"Hx24"D

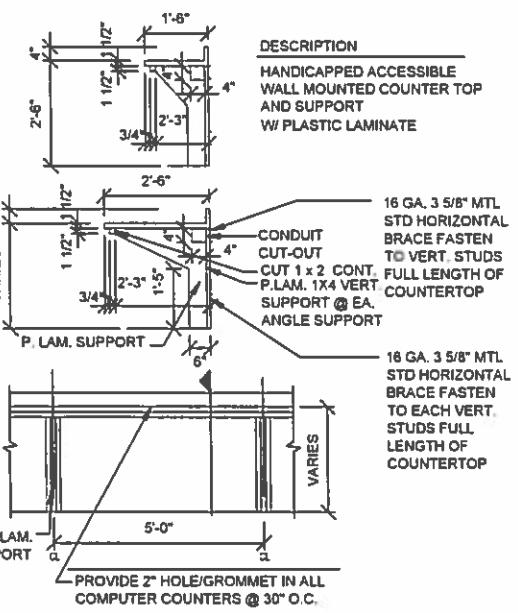

DESCRIPTION
HANDICAPPED ACCESSIBLE WALL MOUNTED COUNTER TOP AND SUPPORT W/ PLASTIC LAMINATE

ITEM	SIZE
E908	(PER PLAN)L x30"Hx2'-6"W
E908A	(PER PLAN)L x30"Hx2'-6"W
E908B	(PER PLAN)L x34"Hx2'-6"W
E908C	(PER PLAN)L x24"Hx2'-6"W
E908D	(PER PLAN)L x30"Hx2'-0"W
E908E	(PER PLAN)L x30"Hx2'-4"W
E908F	(PER PLAN)L x30"Hx2'-4"W
E908G	(PER PLAN)L x30"Hx3'-4"W
E908H	(PER PLAN)L x28"Hx24"W
E908J	(PER PLAN)L x30"Hx18"W

NOTE: CASEWORK IS TO BE LOCKABLE FOR PROJECT & CARRY A LINE ITEM. ALSO ALL EXPOSED SURFACES TO BE LAMINATED OR FINISHED AS NOTED.

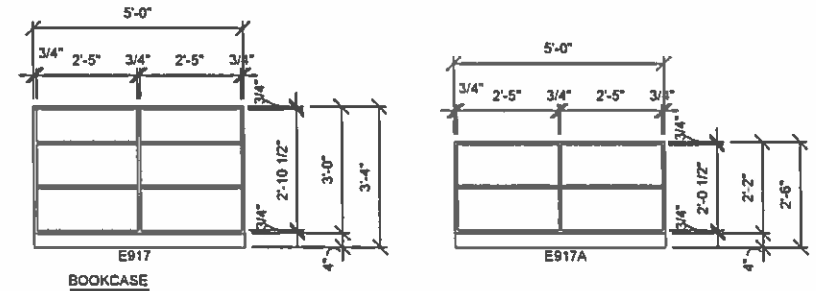

BOOKCASE

ITEM	SIZE
E917	5'-0"W x 3-4"H x 15"D

DESCRIPTION
P. LAM. BOOKCASE W/ ADJUSTABLE SHELVES.

HARVARD•JOLLY
ARCHITECTURE
Ft Lauderdale 954-486-7910
Ft Myers 239-275-7774
Jacksonville 904-737-3300
Deerfield Beach 954-427-7777
Punta Gorda 941-575-0403
St. Petersburg 727-896-4611
Tampa 813-738-4370
West Palm Beach 561-478-4457
AA0003119
www.HarvardJolly.com
1651 FIRST AVE. BEACH, FL.

NEW CLASSROOM BUILDING
RIVIERA BEACH MARITIME ACADEMY
RIVIERA BEACH, FLORIDA
CONTRUCTION DOCUEMENTS

Contr. No	214031.00
Date:	09-24-14
Drawn:	
Revised:	

copyright 2014

René Tarcila AIA, REFP

A7.4

P:\TD\K2 DD\pdf\A7.4.dwg, 9/25/2014 2:27:27 PM

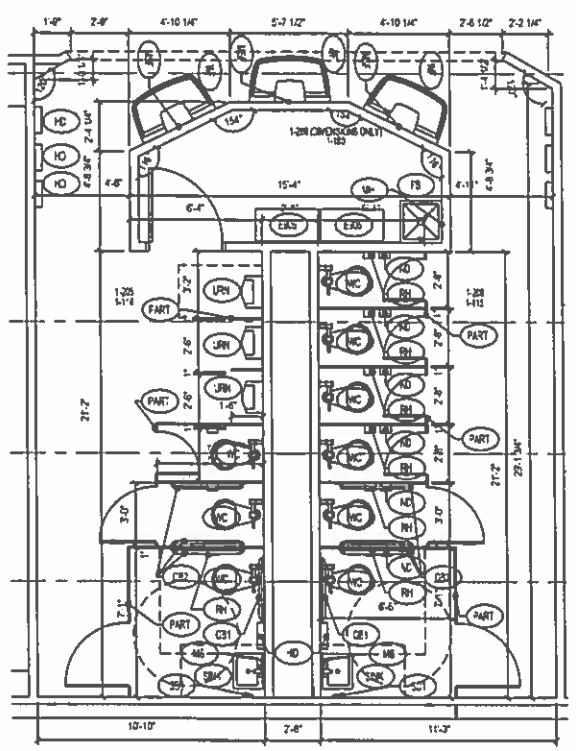

01 ENLARGED R.R. PLAN

SCALE: 1/4"=1'-0"

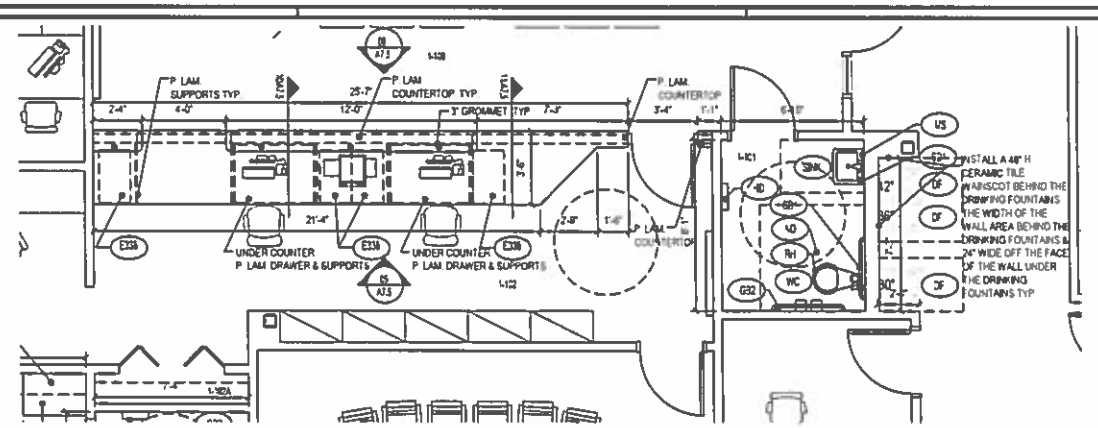

02 ENLARGED EQUIPMENT PLAN

SCALE: 1/4"=1'-0"

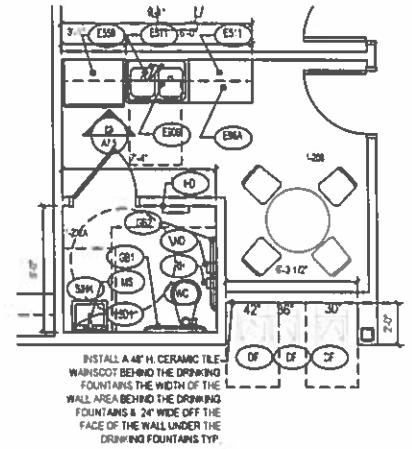

04 ENLARGED EQUIPMENTPLAN

SCALE: 1/4"=1'-0"

MISC. ACCESSORIES & EQUIPMENT

(SEE SPECIFICATIONS FOR MORE INFO.)

- MH — MOP HOLDER- B-223 SURFACE MOUNTED STAINLESS STEEL MOP HOLDER (PROVIDE AT EACH CUSTODIAL CLOSET) 38" LONG UNLESS OTHERWISE NOTED
- VT-1 — 86"W X 72"H POWERED- VIDEO FORMAT SCREEN W/ BLACK MASKING BORDERS- ELECT. OPER. PROJECTOR 14'-0" AWAY
- CLK — CLOCK- GPS CLOCK SYSTEM VERIFY QUANTITY & LOCATION WITH PLANS.GPS WIRELESS CLOCK SYSTEM SHALL BE MANUFACTURED BY PRIMEX WIRELESS, INC.(800) 537-0464 FAX (352) 248-2061 WWW.PRIMEXWIRELESS.COM. OR EQUAL.
- VP — PROVIDE & INSTALL VIDEO PROJECTOR MNT. PLATE & ALL OF THE SYSTEMS WIRING & CABLING REQUIRED .
- SCS — SATELLITE CONTROL STATION- AUDIO, DATA CABLE, VIDEO POWER, CONNECTIONS SEE ELECTRICAL DWGS.
- FJDE — FLOOR JUNCTION BOX W/ DATA & POWER- PROVIDE A FLOOR J-BOX DATA & POWER FOR (2) COMPUTERS AT EA LOCATION SHOWN. FOR CONNECTIONS SEE ELECTRICAL DWGS.
- DF — ELECTRIC WATER COOLER SEE PLUMBING DWGS.
- REF — FULL SIZE REFRIGERATOR - FRIGIDAIRE - 8 CU. FT. FGHT 1848 KP TOP FREEZER REFRIGERATOR OR EQUAL.
- MC — MICROWAVE - GE PROFILE SPACEMAKER® 1.0 CU FT UNDER CABINET MNT. OR EQUAL.
- SINK — REFER TO PLUMBING DWGS.
- TD1 — SURFACE MOUNTED ROLL PAPER TOWEL DISPENSER-RENOWN HANDS FREE SYSTEM REN005157-WB OR EQUAL.
- SD1 — WALL MOUNTED SOAP DISPENSER- RENOWN REN55129 CLEAR VIEW BULK SOAP DISP 48OZ WHT LIQUID SOAP DISPENSER OR EQUAL.
- MB — MARKER BOARD- 4'x4'- PORCELAIN ENAMEL MARKER BOARDS BASIS OF DESIGN: POLYVISION, EI ENVIRONMENTAL CERAMICSTEEL SURFACE.PROVIDE BALANCED HIGH PRESSURE LAMINATED PORCELAIN ENAMEL MARKER BOARDS OF 3-PLY CONSTRUCTION CONSISTING OF FACE SHEET, CORE MATERIAL AND BACKING.
- TB — TACK BOARD- 4'x4'-FABRIC FACED OR NATURAL CORK TACK BOARDS AS SELECTED BY THE ARCHITECT. PROVIDE WILDEW REISTANT, WASHABLE, TWO-PLY 100 PERCENT RECYCLED POLYESTER FABRIC WITH A PLAIN WEAVE PATTERN COMPLYING WITH FS CCC_W_408, TYPE II, MILDEW RESISTANT. LAMINATED TO 1/4" THICK CORK BACKING SHEET.PROVIDE ONLY FABRIC THAT HAS A FLAME SPREAD RATING OF 25 OR LESS WHEN TESTED IN ACCORDANCE WITH THE REQUIREMENTS OF ASTM E 84.
- SB — SMART BOARD- INSTALL AUDIO, DATA CABLE, VIDEO, POWER, CONNECTIONS SEE ELECTRICAL DWGS. (PANASONIC UB-T880 IS A MULTI-TOUCH INTERACTIVE ELITE PANAWOARD DIAGONAL 77-INCH (48.3" X 61.7") ANTI-GLARE PANEL 4.3 ASPECT RATIO MULTI-USER (UP TO 3 USERS) AND MULTI-TOUCH SENSITIVE COMES WITH MULTIFUNCTION ELECTRONIC PEN BUILT-IN SPEAKERS 2 BUILT-IN USB PORTS & VIDEO PROJECTOR W/. SUPPORT ARM BY OWNER).
- GB1 — BOBRICK 36" GRAB BAR - B-6106.99 X 36" 1"x" DIAMETER PEENED GRIP HORIZONTAL GRAB BAR WITH CONCEALED MOUNTING. STAINLESS STEEL OR EQUAL.
- GB2 — BOBRICK 42" GRAB BAR - B-6106.99 X 42" 1X" DIAMETER PEENED GRIP HORIZONTAL GRAB BAR WITH CONCEALED MOUNTING, STAINLESS STEEL OR EQUAL.
- MS — BOBRICK B-2806 1824 STAINLESS STEEL MIRROR 18" X 24" OR EQUAL.
- MSF — FULL HGT. x 48" S.S. MIRROR
- ND — BOBRICK B-254 SURFACE MOUNTED FEMININE NAPKIN DISPOSAL OR EQUAL.
- TD1 — SURFACE MOUNTED ROLL PAPER TOWEL DISPENSER-RENOWN HANDS FREE SYSTTEM REN005157-WB OR EQUAL.
- RH — BOBRICK B-2888 S.URFACE MNT. MULTI-ROLL TOILET TISSUE DISPENSER OR EQUAL.
- WF — (4) COMPARTMENT WASHFOUNTAIN W/ SOAP DISPENSERS-TERREON BRADLEY QUATRA-FOUNT MODEL MF2944 OR EQUAL.
- DF — ELECTRICAL WATER COOLERS SEE ALL FOR MNT. HGHTS.
- FS — FLOOR SINK- REFER TO PLUMBING DWGS. INSTALL FRP PANELS & TRIM 30" H. ON WALLS AROUND SINK TYP.
- PART — RESTROOM STALL PARTITION SOLID COLOR PHEN..DIC FLOOR ANCHORED/ OVERHEAD BRACED BY ACCURATE PARTITIONS W/ S.S. HARWARE & STILES OR EQUAL.
- WC — WATER CLOSET REFER TO PLUMBING DWGS.
- URN — URINAL REFER TO PLUMBING DWGS.
- FD — FLOOR DRAIN SEE PLUMBING DWGS.
- HD — ELECT. HAND DRYER -HAND DRYER FROM ONE OF THESE MANUFACTURERS AMERICAN DRYER, INC. BOBRICK, PINNACLE DRYER CORP. EXCEL DRYER, INC. OR WORLD DRYER.
- HW — ELECT. WATER HEATER- REFER TO ELECTRICAL & PLUMBING DWGS. TYP.

HANDICAPPED CLEAR FLOOR SPACE

* INDICATES TALL CASEWORK

FE — FIRE EXTINGUISHER

FEC — FIRE EXTINGUISHER CABINET. (PROVIDE FIRE BLANKETS AS REQ.)

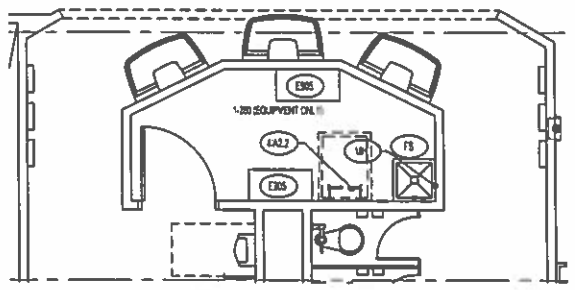

01A ENLARGED PLAN

SCALE: 1/4"=1'-0"

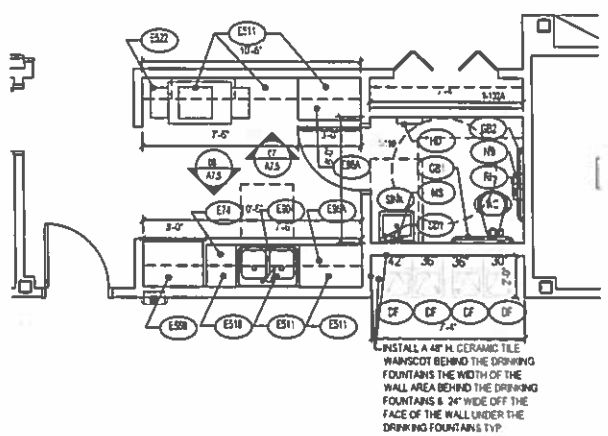

03 ENLARGED EQUIPMENTPLAN

SCALE: 1/4"=1'-0"

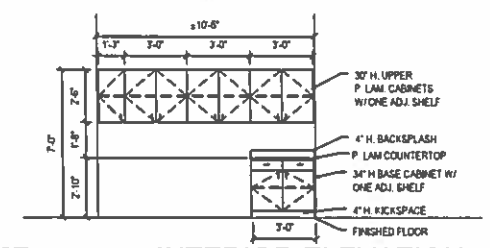

07 INTERIOR ELEVATION

SCALE: 1/4"=1'-0"

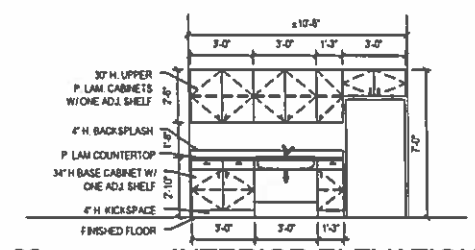

08 INTERIOR ELEVATION

SCALE: 1/4"=1'-0"

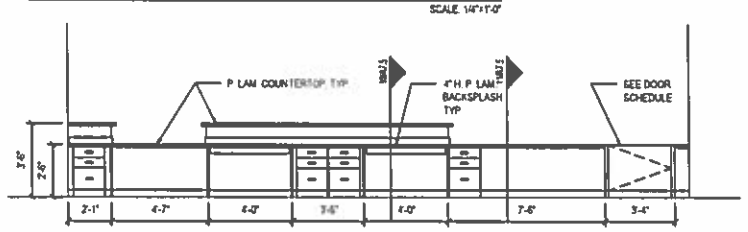

05 INTERIOR ELEVATION

SCALE: 1/4"=1'-0"

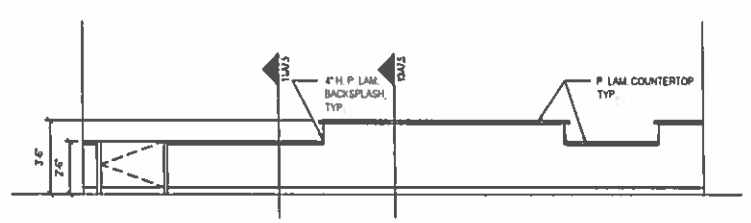

06 INTERIOR ELEVATION

SCALE: 1/4"=1'-0"

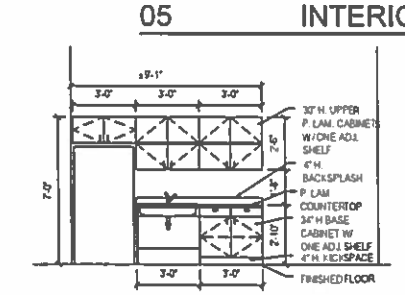

09 INTERIOR ELEVATION

SCALE: 1/4"=1'-0"

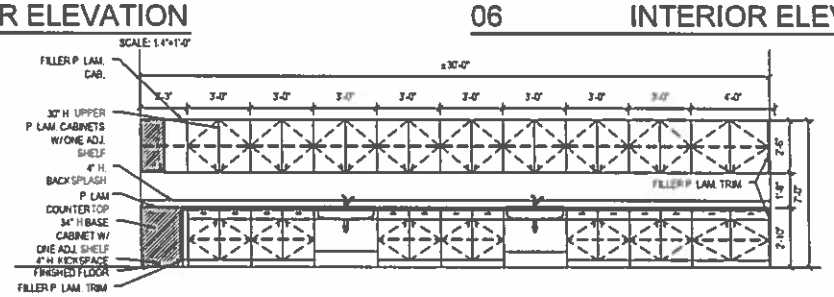

10 INTERIOR ELEVATION

SCALE: 1/4"=1'-0"

11 NOT USED

SCALE: N.T.S.

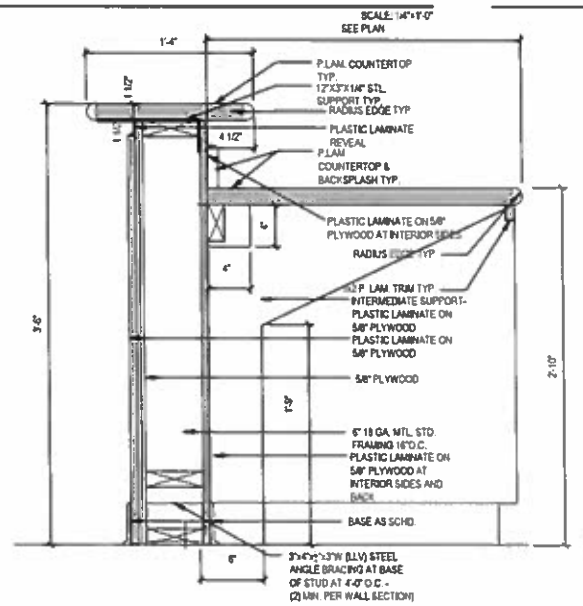

12 INTERIOR ELEVATION

SCALE: 1-1/2"=1'-0"

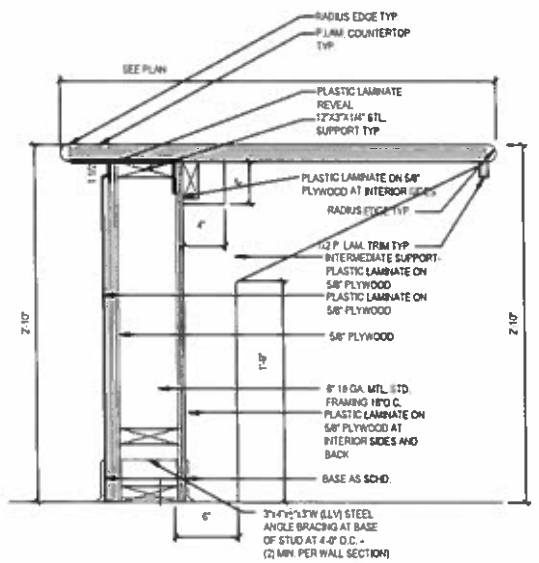

13 INTERIOR ELEVATION

SCALE: 1-1/2"=1'-0"

HARVARD • JOLLY ARCHITECTURE

Ft. Lauderdale 954-495-7910
Ft. Myers 239-275-7774
Jacksonville 904-399-3300
Melbourne 321-777-7777
Punta Gorda 941-575-0403
St. Petersburg 727-896-4611
Tampa 813-286-8001
West Palm Beach 561-478-4457
AA0003119
www.harvardjolly.com
WEST PALM BEACH, FL

NEW CLASSROOM BUILDING
RIVIERA BEACH MARITIME ACADEMY
RIVIERA BEACH, FLORIDA
CONTRUCTION DOCUEMENTS

Contr. No	214031.00
Date	09-24-14
Drawn:	
Revised:	

copyright 2014

René Tercilla AIA REFP

A7.5

P:\TODAY\2 00\pdx\A7.5.dwg 9/25/2014 2:27:44 PM

P:\T0042 00\plot\A8 1 dwg, 9/25/2014 2 28 38 PM

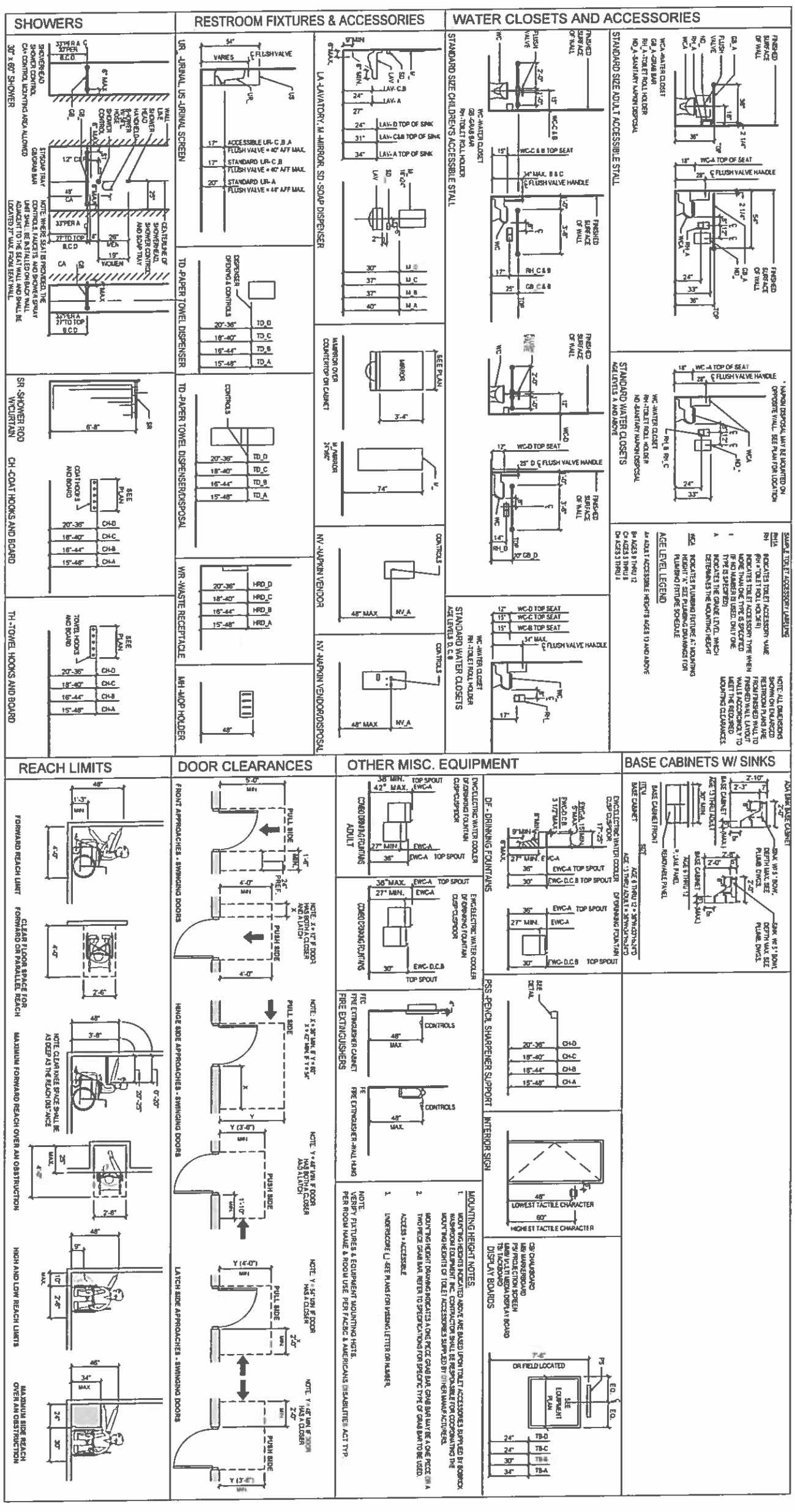

A8.1

Rand Torcello AIA, REFP

copyright 2014

Corner No 214031.00
Date 09-24-14
Drawn
Reviewed

NEW CLASSROOM BUILDING
RIVIERA BEACH MARITIME ACADEMY
RIVIERA BEACH, FLORIDA
CONTRUCTION DOCUEMENTS

Ft. Lauderdale 954-486-7919
Ft. Myers 239-275-7774
Jacksonville 904-396-3300
Orlando 407-667-7727
Punta Gorda 941-575-0403
St. Petersburg 727-896-4611
Tampa 813-286-8206
West Palm Beach 561-478-4457
AAC000119
www.HarvardJolly.com
WEST PALM BEACH, FL

HARVARD • JOLLY
ARCHITECTURE

2.1 SIGNS- MANUFACTURERS

A. Manufacturer shall be one of the following however products of other manufacturers will be considered for acceptance provided they equal or exceed the material requirements and functional qualities of the specified product.
   1. ASI Sign Systems, Indianapolis, Indiana; Cincinnati, Ohio; Cleveland, Ohio
   2. Andco Industries Corp., Greensboro, North Carolina
   3. Baron Signs, Lake Park, Florida
   4. Multi-Graphics, Inc. Pelham, Georgia

2.2 FLORIDA AMERICANS WITH DISABILITIES ACT REQUIREMENTS
A. Manufacturer shall conform to tactile, Braille, letter size, and other requirements as required by Florida Accessibility Code for Building Construction and ANSI A117.1.
B. ADA requirements supersede technical specifications in this Section.

2.3 BUILDING SIGNAGE - GENERAL
A. General; applies to all signs except as noted:
   1. Material shall be minimum 1/8" clear matte acrylic stock with 3/8" radius corners.
      a. Exterior signs - Shall be UV stable material of non-petroleum base phenolic resin using sand carving process to create the raised lettering, which is an integral part of the sign.
      b. Interior signs - Shall be material of non-petroleum base phenolic resin using sand carving process to create the raised lettering, which is an integral part of the sign.
      c. Interior signs exposed to direct sun, shall be of same material as exterior signs.
      d. Paint shall be Matthews Acrylic Polyurethane system or equal.
         i) Shall be low VOC
         ii) Shall be UV Stable
         iii) Shall be lead and chromate free
         iv) Minimum life expectancy of 10-years
   2. Applied lettering not allowed.
   3. Letters and background colors selected by Architect from manufacturer's standard colors
   4. Mounting:
      a. Shall be with adhesives and non-removable oval head screws
      b. Mount at locations as directed by Architect
      c. Mount at 60" above finished floor to the center of the sign
   5. Graphic Process with Braille in one of the following but no applied lettering method allowed:
      a. Provide raised (photopolymer process)
      b. Engraved letters
      c. Sand craved process
   6. Letters:
      a. Letters and numbers shall have width to height ratio between 3:5 and 1:1 and stroke width to height ratio between 1:5 and 1:10.
      b. Letters and numbers to be raised 1/32" upper case sans serif font with Grade 2 Braille
      c. Raised characters shall be 5/8" high minimum and 2" high maximum.
      d. Pictograms shall have the equivalent verbal description directly below the pictogram.
   7. Characters and backgrounds must be matte or other non-glaze surface and of contrasting colors.
   8. All signs shall comply with chapter 11 FBC.
B. Capacity signs:
   1. For all rooms with a capacity of 50 persons or more as shown on the drawings or other rooms as indicated on the plans.
   2. Furnish and install signage, 3" high by length required, reading "MAXIMUM CAPACITY".
   3. Allow for 3-digits maximum after "maximum capacity", copy as shown on the drawings.
C. Toilet Room Handicapped Signs
   1. Furnish and install one sign depicting National Handicapped Symbol (wheelchair) at each toilet room, equipped with facilities for the handicapped.
      a. Size shall be 6" by 6".
D. Room Name and Number Signs
   1. Provide a sign for each room or space to include name and room number.
      a. Classroom and administrative office signs shall have a slot providing the owner the ability to add a teacher's name and change the name as necessary.
      b. Minimum size of 3" high by 6" wide for signs, longer where nomenclature demands
   2. Mount number as directed by Architect.
   3. All spaces listed in Finish Schedule plus if more than one door is to a space, additional signs will be required one by number of doors to space.
E. Storage Signs
   1. Provide and install at mechanical and electrical rooms a sign mounted on the door to read as follows. " STORAGE NOT ALLOWED"
   2. Signs shall be matte acrylic plastic, red background with white letters 3 " high by width needed for copy and Braille, with 3/8" radius corners.
   3. Mount on doors with non-removable oval head screws verify number signs required.
F. Fire Extinguisher, No Exit and Pull Station Sign
   1. Copy to read; "No Exit", "Fire Pull Station Inside", And "Fire Extinguisher Inside"
   2. Red letters, same material, size and mounting as in A. General.
   3. NO EXIT sign shall have letter size as per NFPA 101 section 7.10.8.3.
   4. Braille sign not required for fire extinguisher.
   5. See plans for locations.
G. Stair Signs
   1. Provide tactile signs at each doorway leading to exit stairway.
   2. Wording on sign: "EXIT"
H. Evacuation Plan
   1. Provide frame for a graphic floor plan in each student occupied room.
      a. Size to be nominal 9" high by 12" width
      b. Provide a clear removable plastic cover over each sign.
      c. Sign cover will only be removable using a tool.
   2. Mounting:
      a. Non-removable oval head screws, using rawl plugs where mounted on masonry.
      b. Architect shall supply the plans to the Contractor.
   3. Frame Material: Matte acrylic plastic with all edges eased and tempered glass or clear plastic cover.
I. Fire Rated/Smoke Partition Labeling
   1. Field label all fire rated walls above ceiling level, with fire rating shown on the construction plans.
      a. Provide minimum 1½" high block lettering stenciled on wall above finished ceiling, if in a storage, mechanical, electrical, or similar unfinished room. install at approximately 84 inches above floor.
      b. *(Contractor to use rating from permit plans)* HOUR FIRE RATED WALL, PROTECT ALL OPENING AND THROUGH WALL PENETRATION PER CODE REQUIREMENTS.
   2. Field label all smoke partitions above ceiling level.
      a. Provide minimum 1½" high block lettering stenciled on wall above finished ceiling, if storage, mechanical, electrical, or unfinished room, install at 84" above floor.
      b. SMOKE PARTITION, PROTECT ALL OPENING AND THROUGH WALL PENETRATION PER CODE REQUIREMENTS.
J. Mechanical, Electrical, Data, and Similar Rooms
   1. Provide a sign saying "NO STORAGE" meeting the General requirements.
   2. If these rooms have pair of doors, provide sign saying "THIS DOOR TO REMAIN CLOSED AND LATCHED TOP AND BOTTOM, EXCEPT DURING THE TRANSFER OF EQUIPMENT"
      a. Sign shall have 1" high block letters and be permanently attached (Attached in way as to maintain the rating of the door) to the inactive door near the latch side 60 inches from finished floor to center of sign.
      b. Braille not required for this sign.
K. "No Smoking" - "Smoke Free Campus" Sign
   1. Copy to read: "No Smoking" or "Smoke Free Campus" with universal graphic.
   2. Mounting: Non-removable oval head screws, using rawl plugs where mounted on masonry.
   3. Verify exact location with Architect. Schedule is provided for verbiage and quantity for pricing purposes. Locations and final graphics/verbiage to be determined by Architect.
   4. Material: 1/8" thick matte acrylic plastic with all edges eased.
   5. Graphic Process: Raised letters, and graphic. Braille shall be formed as an integral part of the sign face or surface applied to the sign face.
   6. Colors: Letters and background colors as selected by Architect from manufacturer's standard colors.
   7. Letters: Letters and numbers shall have width to height ratio between 3:5 and 1:1 and a stoke width to height ratio between 1:5 and 1:10. Letters and numbers shall be raised 1/32" upper case sans serif font type with Grade 2 Braille.
   8. Raised characters shall be 2" high. Pictograms shall be accompanied by the equivalent verbal description placed directly below the pictogram.
   9. Characters and backgrounds must be eggshell, matte or other non-glare surface.

L. PLAQUE Sign
a. Provide shop drawing of plaque size, border type, background finish, letter styles, and sizes, and mounting method.
   1. Verify names, titles and exact wording required for plaque prior to fabrication.
b. Provide rubbing of actual pattern for architect's approval prior to casting.
c. manufacturer: Company specializing in manufacturing the product specified in this section with minimum 5-years documented experience.
d. Aluminum Alloy F-214, size 18" x 24" beveled edges, square corners.
e. Provide concealed anchors suitable for securing attached to intended wall.
f. Casting shall be free of pits, gas holes and all letters shall be sharp, and hand tooled.
g. Clean, etch, and treat plaque with Aldine.
h. Spray two coats of clear acrylic lacquer on completed plaque.

INTERIOR SIGNAGE CHART

TYPE	MOUNTING	LOCATION	QUANTITY	BRAILLE
A	-	NOT USED		
B	A	ALL SPACES LISTED ON THE FINISH SCHEDULE EXCEPT CORRIDORS, STAIRS, IT, MECHANICAL, ELECTRICAL, STORAGE, RESTROOMS, ELEVATOR MACHINE, RESTROOMS	AS REQUIRED	1/4" ADA GRADE II BRAILLE
C	A	ALL SPACES THAT ARE NOT SIGN TYPE "B" LISTED ON THE FINISH SCHEDULE	AS REQUIRED	1/4" ADA GRADE II BRAILLE
D	A	PROVIDE 1 AT EACH END OF EVERY CORRIDOR AND HALLWAY	AS REQUIRED	1/4" ADA GRADE II BRAILLE
E	A	AT EVERY RESTROOM / TOILET / SHOWER PER SEX	AS REQUIRED	1/4" ADA GRADE II BRAILLE
F	A	AT EVERY DOOR WITH AN EXIT LIGHT	AS REQUIRED	1/4" ADA GRADE II BRAILLE
G	A	TO BE DETERMINED	AS REQUIRED	1/4" ADA GRADE II BRAILLE
H	A	AT EVERY LABELED MECHANICAL, ELECTRICAL, DATA ROOM, MACHINE ROOM AND EMERGENCY GENERATOR	AS REQUIRED	1/4" ADA GRADE II BRAILLE
J	A	TO BE DETERMINED	AS REQUIRED	
K	A	AT EVERY ELEVATOR LANDING	AS REQUIRED	1/4" ADA GRADE II BRAILLE
L	A	AT EVERY SPACE WITH AN OCCUPANT CAPACITY OF 50 OR MORE	SEE LIFE SAFETY PLANS	
L2	A	SPACES WITH ROOF HATCHES	SEE ROOF PLANS	
L3	A	TO BE DETERMINED	AS REQUIRED	

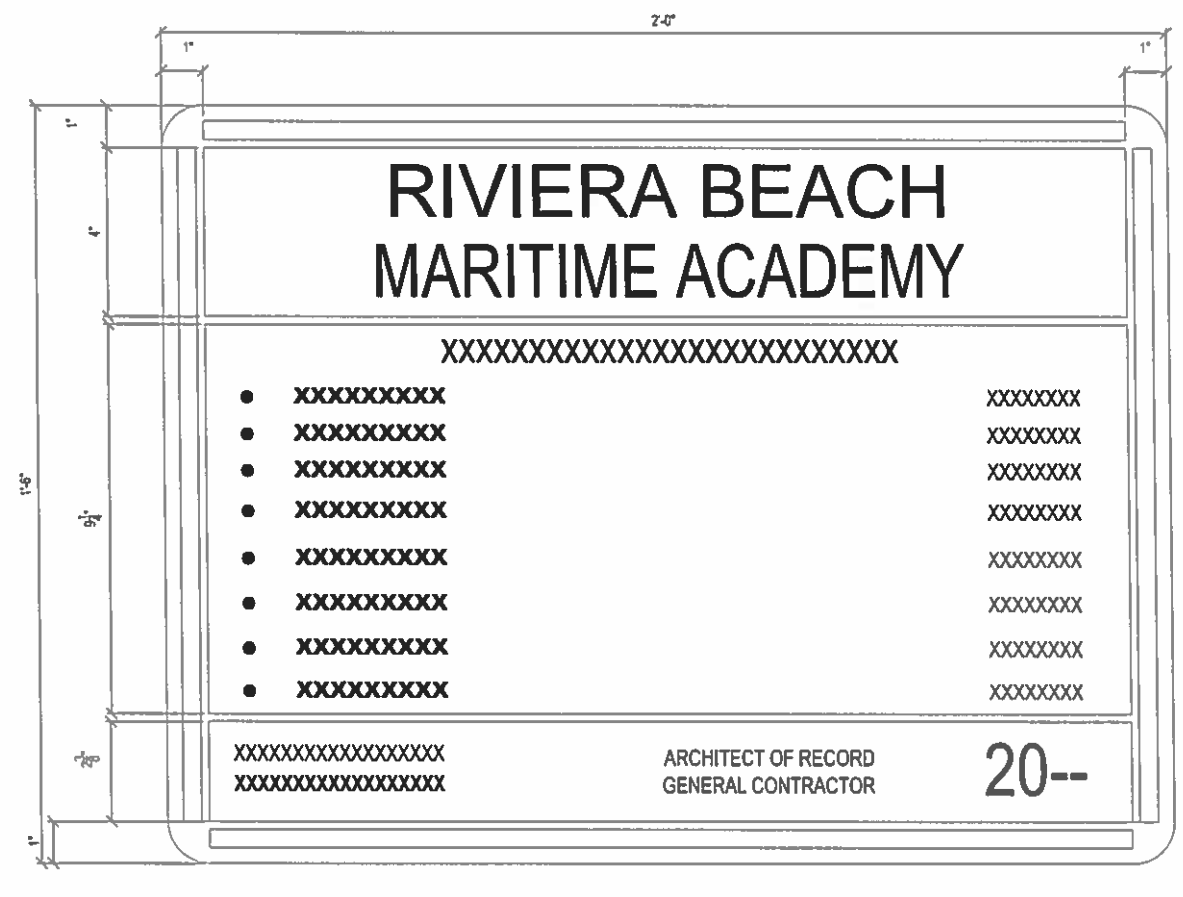

HARVARD•JOLLY
ARCHITECTURE
Ft. Lauderdale 954-486-7910
Ft. Myers 239-275-7774
Jacksonville 904-396-3300
Orlando 407-872-7772
Punta Gorda 941-575-0403
St. Petersburg 727-896-4611
Tampa 813-286-6200
West Palm Beach 561-478-4457
AA0003119
www.harvardjolly.com
WEST PALM BEACH, FL.

NEW CLASSROOM BUILDING
RIVIERA BEACH MARITIME ACADEMY
RIVIERA BEACH, FLORIDA
CONTRUCTION DOCUEMENTS

Contr. No 214031.00
Date 09-24-14
Drawn:
Revised:

copyright 2014

René Tercilla AIA, REFP

A8.2

P:\TC042 City\arch\A8.2.dwg, 9/25/2014 2:28:58 PM

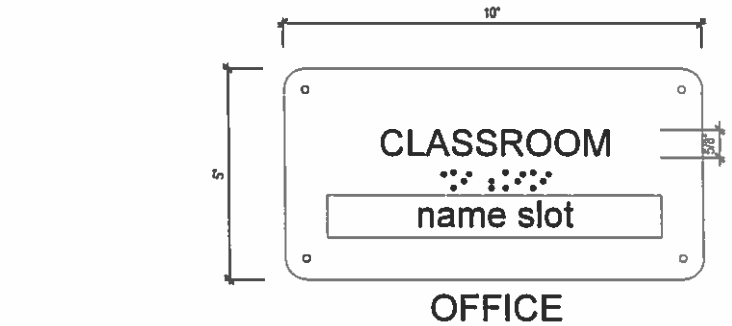

A NOT USED
SCALE: 6"=1'-0"

B SIGN TYPE
SCALE: 6"=1'-0"

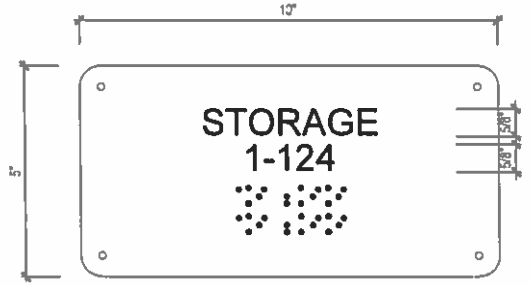

C SIGN TYPE
SCALE: 6"=1'-0"

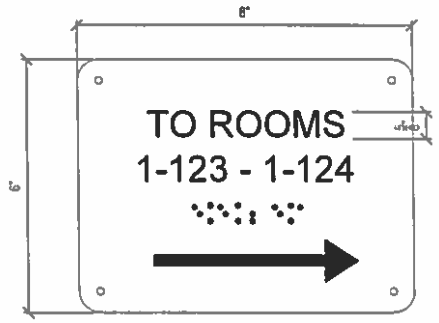

D1 SIGN TYPE
SCALE: 6"=1'-0"

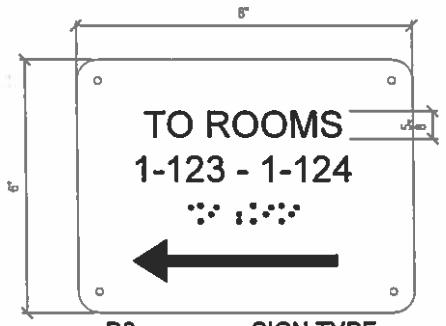

D2 SIGN TYPE
SCALE: 6"=1'-0"

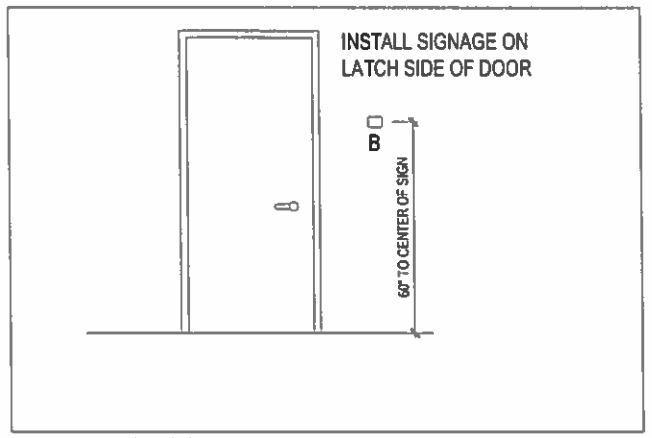

MOUNTING DETAIL
SCALE: 1/2"=1'-0"

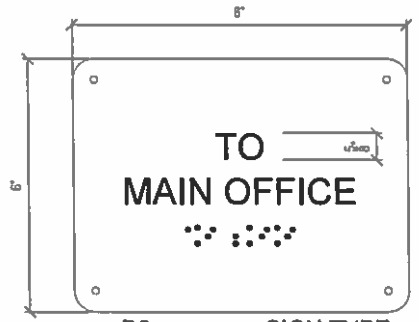

D3 SIGN TYPE
SCALE: 6"=1'-0"

E1 SIGN TYPE
SCALE: 6"=1'-0"

E2 SIGN TYPE
SCALE: 6"=1'-0"

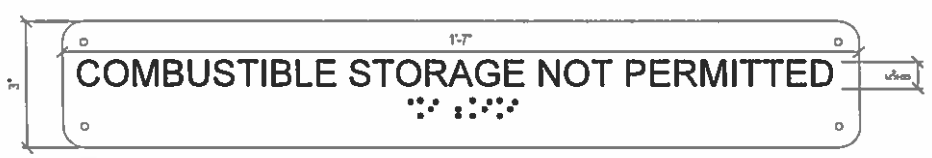

H SIGN TYPE
SCALE: 6"=1'-0"

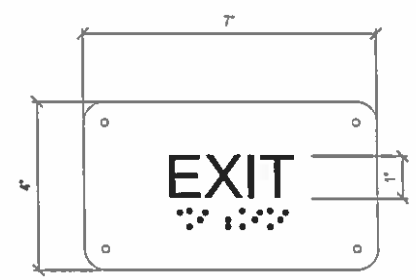

F SIGN TYPE
SCALE: 6"=1'-0"

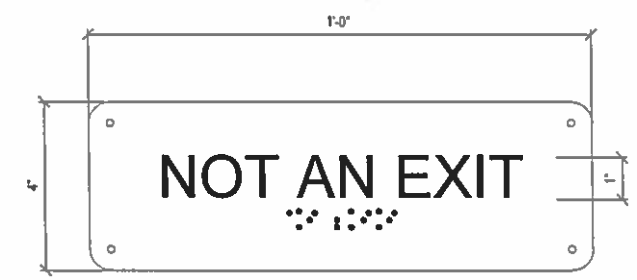

G SIGN TYPE
SCALE: 6"=1'-0"

J SIGN TYPE
SCALE: 6"=1'-0"

K SIGN TYPE
SCALE: 6"=1'-0"

L2 - ROOF ACCESS
L3 - FIRE EXTINGUISHER INSIDE

L SIGN TYPE
SCALE: 6"=1'-0"

HARVARD•JOLLY
ARCHITECTURE

Ft. Lauderdale 954-486-7910
Ft. Myers 239-275-7774
Jacksonville 904-396-3300
Orlando 407-667-7727
Punta Gorda 941-575-0403
St. Petersburg 727-896-4611
Tampa 813-286-8208
West Palm Beach 561-478-4457
AAC000119
www.Harvard.jolly.com
WEST PALM BEACH, FL

NEW CLASSROOM BUILDING
RIVIERA BEACH MARITIME ACADEMY
RIVIERA BEACH, FLORIDA
CONTRUCTION DOCUEMENTS

Comm. No.	214031.00
Date	09-24-14
Drawn:	
Revised:	

copyright 2014

René Torcilla AIA, REFP

A8.3

P:\T0042 00\pdx\A8.3.dwg, 9/25/2014 2:29:23 PM

CEILING LEGEND

- SUSUPENDED CEILING W/ GRID 2 x 2 LAY-IN ACOUSTICAL
- SUSUPENDED CEILING W/ GRID 2 x 4 LAY-IN ACOUSTICAL
- STUCCO SYSTEM W/ SCORE LINES
- GYPSUM WALL BOARD CEILING, SOFFIT OR HEADER
- 24 x 48 FLUORESCENT FIXTURE
- 24 x 24 FLUORESCENT FIXTURE
- SURFACE MOUNTED FLUORESCENT FIXTURE
- WALL MOUNTED FLUORESCENT FIXTURE
- SURFACE MOUNTED FLUORESCENT FIXTURE
- EMERGENCY EXIT LIGHTS SEE ELECT. DWGS. TYP.
- INSTALL OWNER PROVIDED SHORT THROW PROJECTOR & MNT. PLATE & SMART SCREEN AND INSTALL ALL OF THE SYSTEMS WIRING & CABLING REQUIRED. SEE SPECS. EQUIPMENT DWGS. & ELECTRICAL FOR MORE INFORMATION.

A. PROVIDE REVEAL DRYWALL TRIM AT ALL LOCATIONS WHERE GYPSUM WALL BOARD (GWB) ABUTS A DISSIMILAR MATERIAL, TYPICAL UNLESS NOTED OTHERWISE.

B. REFER TO FINISH SCHEDULE FOR ACD. CEILING HEIGHT INFORMATION FOR EACH ROOM.

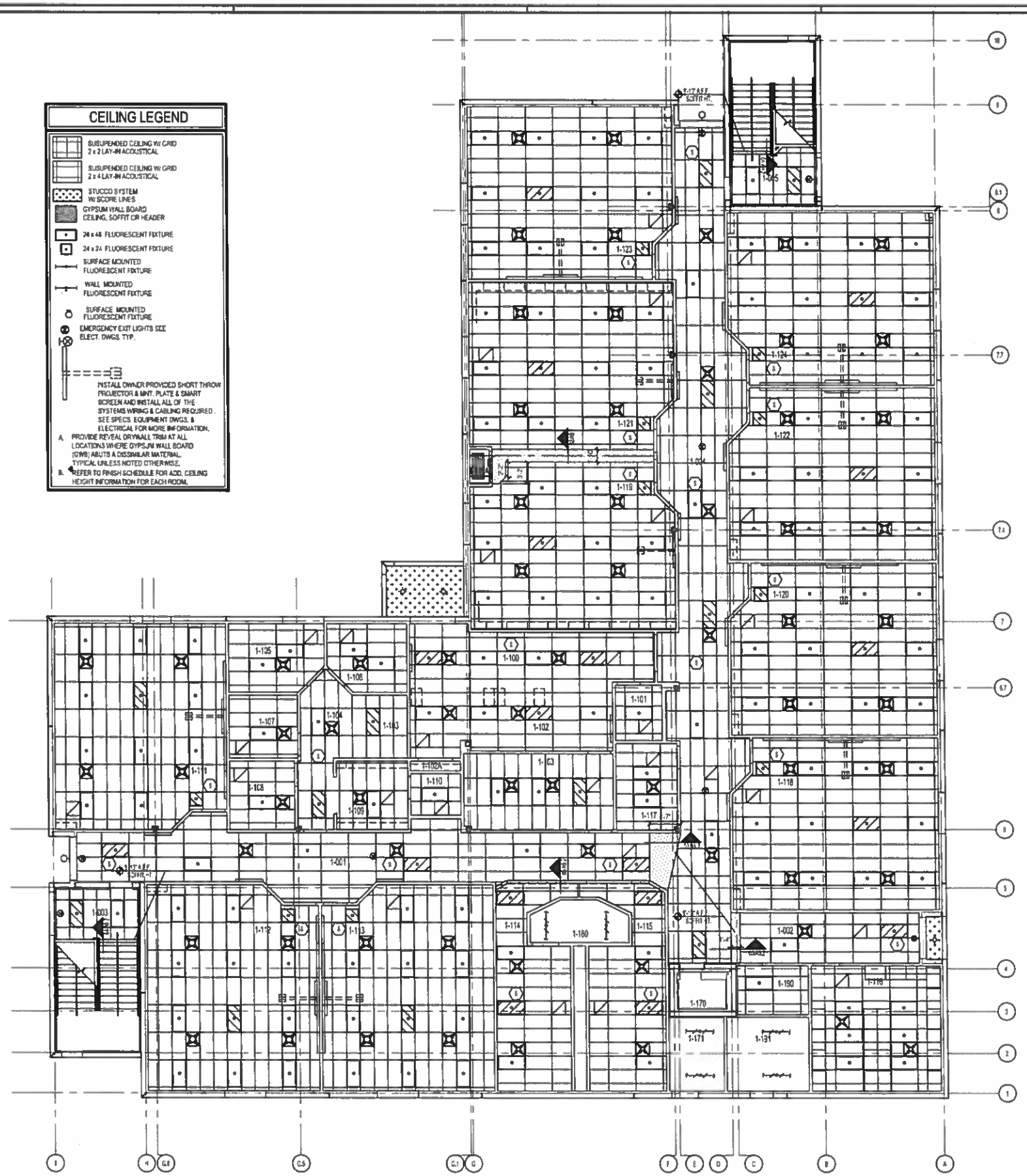

01 1st FLOOR CLG. PLAN- BLDG. 1

SCALE: 1/8"=1'-0"

ROOM CHART

ROOM NO	ROOM NAME	SF	ROOM NO	ROOM NAME	SF
1-001	CORRIDOR	698	1-200	CLASSROOM	736
1-002	CORRIDOR	291	1-201	IT LAB	630
1-003	STAIR	209	1-202	CLASSROOM	736
1-004	CORRIDOR	1075	1-203	IT LAB	625
1-005	STAIR	298	1-204	CLASSROOM	711
1-006	CORRIDOR	723	1-204A	STORAGE	82
1-007	CORRIDOR	1086	1-205	RESTROOM-BOYS	294
			1-206	RESTROOM-GIRLS	305
1-100	RECEPTION	286	1-207	CLASSROOM	749
1-101	RESTROOM	53	1-208	TEACHER PLANNING	128
1-102	ADMINISTRATION	391	1-208A	RESTROOM	44
1-102A	STORAGE	19	1-209	CLASSROOM	736
1-103	ADMINISTRATION	191	1-210	CONFERENCE	213
1-104	CORRIDOR	113	1-211	CLASSROOM	736
1-105	PRINCIPAL	122	1-212	CLASSROOM	736
1-106	GUIDANCE	189	1-213	CLASSROOM	736
1-107	BUSINESS MANAGER	62	1-214	CLASSROOM	736
1-108	GUIDANCE	98	1-215	CLASSROOM	736
1-109	WORK ROOM	186	1-216	CLASSROOM	736
1-110	RESTROOM	44			
1-111	CLASSROOM	736	1-288	CUSTODIAL	89
1-112	CLASSROOM	736	1-290	DATA	183
1-113	CLASSROOM	736			
1-114	RESTROOM-BOYS	294			
1-115	RESTROOM-GIRLS	305			
1-116	STORAGE	344			
1-117	ASSISTANT PRINCIPAL	113			
1-118	CLASSROOM	736			
1-119	CLASSROOM-SCIENCE	721			
1-120	CLASSROOM	736			
1-121	CLASSROOM-SCIENCE	721			
1-122	CLASSROOM	736			
1-123	CLASSROOM	736			
1-124	CLASSROOM	736			
1-170	ELEVATOR	82			
1-171	ELEVATOR EQUIPMENT	88			
1-180	CUSTODIAL	89			
1-190	DATA	73			
1-191	ELECTRICAL	128			

HARVARD • JOLLY
ARCHITECTURE

Ft. Lauderdale 954-485-7910
Ft. Myers 239-275-7774
Jacksonville 904-396-3300
Orlando 407-677-7777
Punta Gorda 941-575-0403
St. Petersburg 727-898-4611
Tampa 813-286-8200
West Palm Beach 561-478-4457
AA0003119
www.harvardjolly.com
WEST PALM BEACH, FL

NEW CLASSROOM BUILDING
RIVIERA BEACH MARITIME ACADEMY
RIVIERA BEACH, FLORIDA
CONTRUCTION DOCUEMENTS

Comm. No:	214031.00
Date:	09-24-14
Drawn:	
Revisions:	

copyright 2014

René Torcille AIA, REFP

A9.1

P:\TODAY DOWN\A9.1.dwg, 10/6/2014 3:07:16 PM

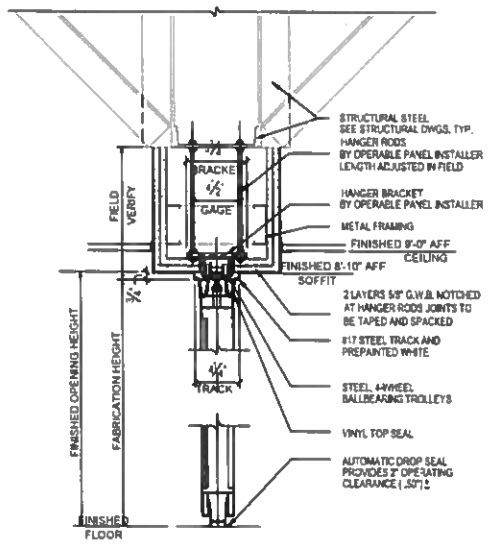

02 OPERABLE WALL DETAIL

SCALE: 1 1/2"=1'-0"

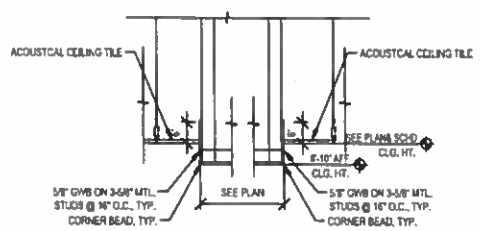

03 CEILING DETAIL

SCALE: 1/2"=1'-0"

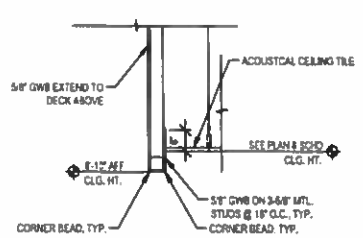

04 CEILING DETAIL

SCALE: 1/2"=1'-0"

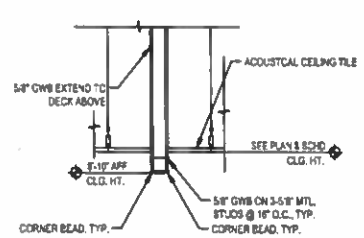

05 CEILING DETAIL

SCALE: 1/2"=1'-0"

CEILING LEGEND

- SUSUPENDED CEILING W/ GRID 2 x 2 LAY-IN ACOUSTICAL
- SUSUPENDED CEILING W/ GRID 2 x 4 LAY-IN ACOUSTICAL
- STUCCO SYSTEM W/ SCORE LINES
- GYPSUM WALL BOARD CEILING SOFFIT OR HEADER
- 2 x 4ft FLUORESCENT FIXTURE
- 2 x 2 FLUORESCENT FIXTURE
- SURFACE MOUNTED FLUORESCENT FIXTURE
- WALL MOUNTED FLUORESCENT FIXTURE
- SURFACE MOUNTED FLUORESCENT FIXTURE
- EMERGENCY EXIT LIGHTS SEE ELECT. DWGS. TYP.
- INSTALL OWNER PROVIDED SHORT THROW PROJECTOR & MNT. PLATE & SMART SCREEN AND INSTALL ALL OF THE SYSTEMS WIRING & CABLING REQUIRED. SEE SPECS, EQUIPMENT DWGS. & ELECTRICAL FOR MORE INFORMATION.

A. PROVIDE REVEAL DRYWALL TRIM AT ALL LOCATIONS WHERE GYPSUM WALL BOARD (GWB) ABUTS A DISSIMILAR MATERIAL. TYPICAL UNLESS NOTED OTHERWISE.

B. REFER TO FINISH SCHEDULE FOR ADD. CEILING HEIGHT INFORMATION FOR EACH ROOM.

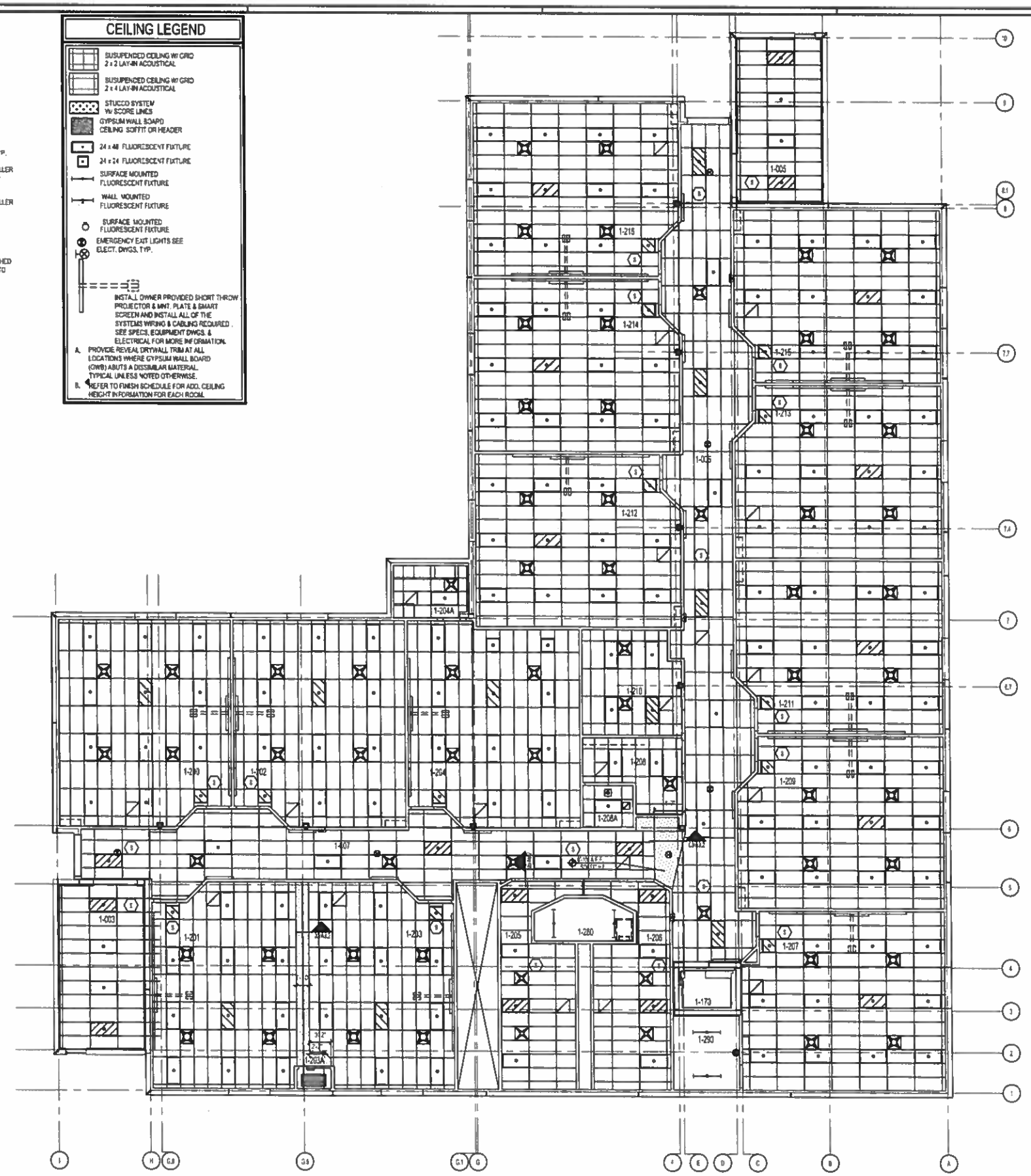

01 2nd FLOOR CLG. PLAN- BLDG. 1

SCALE: 1/8"=1'-0"

ROOM CHART

ROOM NO	ROOM NAME	SF	ROOM NO	ROOM NAME	SF
1-801	CORRIDOR	698	1-209	CLASSROOM	739
1-802	CORRIDOR	784	1-210	IT LAB	636
1-803	STAIR	288	1-202	CLASSROOM	739
1-804	CORRIDOR	1675	1-251	IT LAB	625
1-805	STAIR	288	1-204	CLASSROOM	711
1-806	CORRIDOR	729	1-204A	STORAGE	87
1-807	CORRIDOR	1086	1-255	RESTROOM-BOYS	294
			1-256	RESTROOM-GIRLS	306
1-100	RECEPTION	253	1-207	CLASSROOM	746
1-101	RESTROOM	82	1-208	TEACHER PLANNING	179
1-102	ADMINISTRATION	381	1-208A	RESTROOM	44
1-102A	STORAGE	79	1-209	CLASSROOM	739
1-103	ADMINISTRATION	191	1-210	CONFERENCE	213
1-104	CORRIDOR	111	1-211	CLASSROOM	739
1-105	PRINCIPAL	132	1-212	CLASSROOM	739
1-106	GUIDANCE	189	1-213	CLASSROOM	739
1-107	BUSINESS MANAGER	92	1-214	CLASSROOM	739
1-108	GUIDANCE	96	1-215	CLASSROOM	739
1-109	WORK ROOM	186	1-216	CLASSROOM	739
1-110	RESTROOM	44			
1-111	CLASSROOM	739	1-280	CUSTODIAL	80
1-112	CLASSROOM	739	1-290	DATA	152
1-113	CLASSROOM	739			
1-114	RESTROOM-BOYS	294			
1-115	RESTROOM-GIRLS	306			
1-116	STORAGE	144			
1-117	ASSISTANT PRINCIPAL	113			
1-118	CLASSROOM	739			
1-119	CLASSROOM-SCIENCE	721			
1-120	CLASSROOM	739			
1-121	CLASSROOM-SCIENCE	731			
1-122	CLASSROOM	739			
1-123	CLASSROOM	739			
1-124	CLASSROOM	739			
1-170	ELEVATOR	87			
1-171	ELEVATOR EQUIPMENT	86			
1-180	CUSTODIAL	88			
1-190	DATA	72			
1-191	ELECTRICAL	120			

HARVARD•JOLLY
ARCHITECTURE
Ft. Lauderdale 954-466-7910
Ft. Myers 239-275-7774
Jacksonville 904-399-3300
Orlando 407-896-4877
Punta Gorda 941-575-0403
St. Petersburg 727-896-4611
Tampa 813-286-8208
West Palm Beach 561-478-4457
AA0003119
www.harvardjolly.com
WEST PALM BEACH, FL.

NEW CLASSROOM BUILDING
RIVIERA BEACH MARITIME ACADEMY
RIVIERA BEACH, FLORIDA
CONTRUCTION DOCUEMENTS

Comm. No: 214031.00
Date: 09-24-14
Drawn: -
Revised:

copyright 2014

René Tercilla AIA, REFP

A9.2

P:\1004\2 00\dwg\A9.2.dwg, 10/6/2014 3:07:37 PM

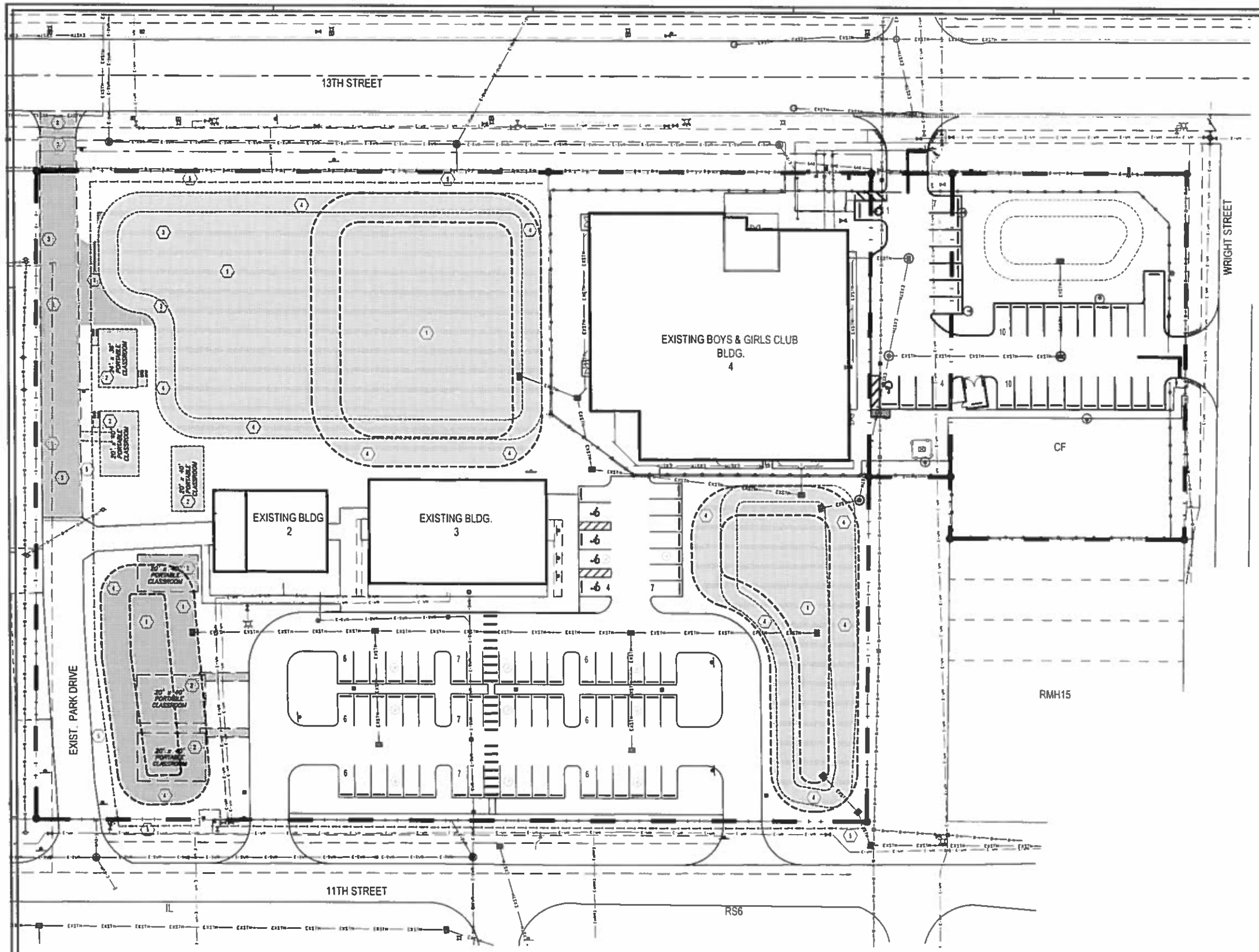

DEMOLITION PLAN GENERAL NOTES

- CONTRACTOR(S) ARE RESPONSIBLE FOR FIELD VERIFYING THE EXTENT OF DEMOLITION WORK PRIOR TO BIDDING AND FOR COORDINATING THE EXTENT OF DEMOLITION WITH THE INSTALLATION OF NEW SYSTEMS AND FINISHES INDICATED IN THE CONTRACT DOCUMENTS. REFER TO THE NEW CONSTRUCTION DRAWINGS FOR DEMOLITION REQUIRED, BUT NOT SHOWN ON DEMOLITION PLANS.
- REFER TO THE CIVIL, STRUCTURAL, MECHANICAL, PLUMBING AND ELECTRICAL DOCUMENTS FOR ADDITIONAL DEMOLITION ITEMS.
- MECHANICAL AND ELECTRICAL ITEMS REMOVED SHOULD BE CAPPED AND ABANDONED SHALL BE LOCATED BEHIND FINAL FINISH SYSTEMS.
- WALLS TO BE REMOVED SHALL BE REMOVED TO A POINT 2" MINIMUM BELOW THE EXISTING FLOOR SLAB UNLESS SETTING ON THE SLAB OR AS SPECIFICALLY NOTED. PATCH WITH NEW CONCRETE TO BE FLUSH WITH THE EXISTING FLOOR SLAB.
- WHEN OPENINGS ARE CUT INTO AN EXISTING WALL, THE OPENING SHALL BE A MINIMUM OF 1'-4" LONGER THAN THE FINISHED OPENING REQUIRED TO ALLOW FOR 8" MINIMUM OF NEW CMU TOOTHED IN AT EDGES.
- "CEILING" DENOTES CEILING MATERIALS INCLUDING SUSPENSION SYSTEMS ADHESIVE RESIDUES, MOLDINGS, UP TO BUT EXCLUSIVE OF STRUCTURAL SYSTEMS.
- REMOVE EACH ITEM SHOWN WITH DASHED LINES ON THIS DRAWING WHETHER OR NOT EACH ITEM IS SPECIFICALLY NOTED TO BE REMOVED
- AFTER THE DEMOLITION OF MATERIALS, THE RESULTING EXPOSED SURFACE SHALL BE SMOOTH AND FLUSH WITH EXISTING CONDITIONS.
- MATERIALS OF DEMOLITION SHALL BE DISPOSED OF OFF SITE UNLESS DIRECTED OTHERWISE BY OWNER.
- OWNER SHALL HAVE "FIRST RIGHTS OF REFUSAL" PRIOR TO DEMOLITION OPERATIONS.
- WHERE WALLS ARE SHOWN TO BE REMOVED, REMOVE ALL ITEMS IN THE WALLS, ELECTRICAL, PLUMBING, ETC. PER ALL APPLICABLE CODES AND STANDARDS.
- MAINTAIN THE EGRESS REQUIRED IN ALL AREAS PER ALL APPLICABLE CODES AND STANDARDS DURING CONSTRUCTION.
- COORDINATE REMOVAL OF UNDERGROUND UTILITIES WITH CIVIL DRAWINGS.

SITE PLAN DEMOLITION NOTES

DR — DENOTES EXISTING TO BE REMOVED, TYPICAL.

1. DENOTES AREA OF DEMOLITION & AREA OF WORK FOR THE PROJECT, REMOVE EXISTING DRIVE, CURB, PAVING, BLDG., LANDSCAPE ETC. PREPARE AREA FOR NEW WORK. THE NEW BLDG.&1, PARKING AREAS & NEW DRIVE FOR THIS PROJECT.
2. CONTRACTOR IS TO REMOVE BLDG. IN ITS ENTIRETY AND REMOVE ALL SERVICES, CONNECTING SIDEWALKS, SYSTEMS / UTILITIES TO & IN THE BLDG. (MEP, ETC.) COORDINATE ALL NEW SERVICES, SYSTEMS / UTILITIES TO THE NEW BLDG. WITH THE CONSTRUCTION DOCUMENTS FOR THIS PROJECT.
3. REMOVE EXISTING DRIVE, CURB, PAVING, ETC. PREPARE AREA FOR NEW WORK & THE NEW PARKING AREAS FOR THIS PROJECT.REFER TO LANDSCAPE PLANS & CIVIL DWGS. FOR MORE INFORMATION.
4. REMOVE EXISTING LANDSCAPE (GRASS, TREES, SHRUBS, ETC.) AND PREPARE AREA FOR NEW WORK. REFER TO LANDSCAPE PLANS & CIVIL DWGS. FOR MORE INFORMATION.
5. REMOVE EXISTING FENCE SYSTEM (POSTS, FOOTINGS, FENCE , ETC.) REFER TO G1.1 FOR MORE INFORMATION ON NEW FENCE.

GENERAL NOTE. TERMINATE ALL SYSTEMS TO CONFORM TO ALL APPLICABLE CODES AND STANDARDS THAT ARE TO BE REMOVED. ONCE A SYSTEM IS TERMINATED FROM A STRUCTURE REMOVE IB BACK TO THE MAIN POINT OF ENTRY ON THE SITE (IF IT IS TO REMAIN ON SITE REMOVE IT BACK TO THE POINT OF ENRTY TO THE SITE.)
NOTE : GENERAL CONTRACTOR IS REQUIRED TO INSTALL ALL CONSTRUCTION FENCING TO REMAIN IN PLACE THRU THE DURATION OF THE PROJECT. ALL CONSTRUCTION ACTIVITIES SHALL BE SEPARATED FROM THE OCCUPIED SITE BY LEAST ONE SECURE BARRIER, PROVIDE GATES FOR ACCESS REQUIRED TO AREAS ON THE SITE.

01 OVERALL SITE DEMO PLAN

SCALE: 1"= 30'-0"

TRUE NORTH

0 30' 60' 90'
GRAPHIC SCALE

HARVARD•JOLLY
ARCHITECTURE

Ft. Lauderdale 954-486-7910
Ft. Myers 239-275-7774
Jacksonville 904-396-3300
Orlando 407-872-2777
Punta Gorda 941-575-0403
St. Petersburg 727-896-4611
Tampa 813-286-8006
West Palm Beach 561-478-4457
AA0003119
www.Harvardjolly.com
WEST PALM BEACH, FL.

NEW CLASSROOM BUILDING
RIVIERA BEACH MARITIME ACADEMY
RIVIERA BEACH, FLORIDA
CONTRUCTION DOCUEMENTS

Corres. No: 214031.00
Date: 09-24-14
Drawn:
Reviewed:

copyright 2014

René Tercilla AIA REFP

AD1.0

C:\Users\rm sechrist\Documents\T0042 20\pdet\AD1 0.dwg, 10/29/2014 8:03:06 AM, rm sechrist

GENERAL NOTES:

1. COORDINATION OF DRAWINGS AND DISCIPLINES. IT IS THE CONTRACTOR'S RESPONSIBILITY TO REVIEW ALL DRAWINGS AND SPECIFICATIONS FOR COMPLETENESS AND ACCURACY. FURTHER CONTRACTOR IS COORDINATE ALL TRADES AND DISCIPLINES PROPERLY. ANY DISCREPANCIES IN PLANS OR SPECIFICATIONS ARE TO BE BROUGHT TO THE ATTENTION OF THE ENGINEER IN WRITING.
2. BUILDINGS. CONTRACTOR IS ADVISED THAT THERE MAY BE MODIFICATIONS TO SERVICE LINES (MATERIALS, SIZES, LOCATIONS, DEPTHS, ETC.) AS THE BUILDING DOCUMENTS ARE FINALIZED AND PERMITTED.
3. SAFETY. IT SHALL BE THE CONTRACTOR'S SOLE RESPONSIBILITY TO TAKE THE NECESSARY PRECAUTIONS TO ENSURE PROPER SAFETY AND WORKMANSHIP WHEN WORKING IN THE VICINITY OF EXISTING UTILITY LINES. THE CONTRACTOR SHALL BE RESPONSIBLE TO COORDINATE WITH THE RESPECTIVE UTILITY PROVIDER ON ANY WORK IN THE VICINITY OF OVERHEAD OR UNDERGROUND LINES. CONTRACTOR SHALL VERIFY PROPER CLEARANCE BELOW EXISTING OVERHEAD LINES PRIOR TO WORKING WITHIN THE VICINITY OF THE LINES.
4. FAMILIARITY WITH SITE CONDITIONS. THE CONTRACTOR SHALL VISIT THE SITE AND ACQUAINT HIMSELF WITH ALL EXISTING CONDITIONS. MAKE HIS OWN SUBSURFACE INVESTIGATION TO SATISFY HIMSELF AS TO THE SITE AND SUBSURFACE CONDITIONS, BUT SUCH SUBSURFACE INVESTIGATIONS SHALL BE PERFORMED ONLY UNDER TIME SCHEDULES AND ARRANGEMENTS APPROVED IN ADVANCE BY THE OWNER'S REPRESENTATIVE AND ENGINEER. THE EXISTING GRADES SHOWN ON THE DRAWINGS ARE APPROXIMATE ONLY AND NO REPRESENTATION IS MADE AS TO THEIR ACCURACY OR CONSISTENCY. THE CONTRACTOR SHALL VERIFY ALL EXISTING GRADES TO THE EXTENT NECESSARY TO INSURE COMPLETION OF THE JOB TO THE PROPOSED GRADES INDICATED ON THE DRAWINGS.
5. WORKMANSHIP. ALL WORK SHALL BE PERFORMED IN A WORKMANSHIP-LIKE MANNER AND SHALL CONFORM WITH ALL APPLICABLE CITY, COUNTY, STATE AND FEDERAL REGULATIONS AND/OR CODES, INCLUDING OSHA.
6. ELEVATIONS. ALL ELEVATIONS REFER TO THE NATIONAL GEODETIC VERTICAL DATUM OF 1929 (NGVD '29).
7. SITE PLAN. REFER TO ARCHITECTURAL SITE PLAN FOR ADDITIONAL INFORMATION.
8. SURVEY. REFER TO SURVEY FOR ADDITIONAL INFORMATION.
9. BENCHMARK. REFER TO SURVEY FOR BENCHMARK LOCATIONS AND ELEVATIONS.
10. GEOTECHNICAL INFORMATION. REFER TO GEOTECHNICAL REPORTS AND BORING LOGS FOR ADDITIONAL INFORMATION & PAVEMENT/EMBANKMENT/SITE PREPARATION REQUIREMENTS.
11. FIELD LOCATIONS. THE CONTRACTOR SHALL CONTACT "SUNSHINE STATE ONE CALL OF FLORIDA, INC. (1-800-432-4770)" AT LEAST 48 HOURS PRIOR TO BEGINNING ANY EXCAVATION. THE CONTRACTOR SHALL GIVE ADEQUATE NOTIFICATION TO ALL AFFECTED UTILITY OWNERS FOR REMOVAL, RELOCATION AND ALTERATION OF THEIR EXISTING FACILITIES.
12. PROTECTION OF UTILITIES. THE CONTRACTOR SHALL BE RESPONSIBLE AT ALL TIMES THROUGHOUT THE DURATION OF CONSTRUCTION FOR THE PROTECTION OF ALL EXISTING AND NEWLY INSTALLED ABOVE GROUND, UNDERGROUND, AND ON THE SURFACE STRUCTURES AND UTILITIES FROM DAMAGE OR SERVICE DISRUPTION. THE CONTRACTOR SHALL BE RESPONSIBLE FOR TAKING SUCH MEASURES AS NECESSARY TO PROTECT THE HEALTH, SAFETY, AND WELFARE OF THOSE PERSONS HAVING ACCESS TO THE WORK SITE.
13. EXISTING UTILITIES. EXISTING UTILITY LOCATIONS SHOWN ON THESE PLANS ARE APPROXIMATE. THE ENGINEER ASSUMES NO RESPONSIBILITY FOR THE ACCURACY OF THE EXISTING UTILITIES SHOWN ON THE PLANS OR FOR ANY EXISTING UTILITIES THAT ARE NOT SHOWN ON THE PLANS. PRIOR TO THE START OF ANY CONSTRUCTION ACTIVITY, IT SHALL BE THE CONTRACTOR'S RESPONSIBILITY TO MAKE ARRANGEMENTS FOR FIELD LOCATIONS OF EXISTING UTILITIES. ANY RELOCATIONS OF THE VARIOUS EXISTING UTILITIES SHALL BE COORDINATED WITH THE RESPECTIVE UTILITY PROVIDER IN A TIMELY MANNER TO MINIMIZE IMPACT ON THE CONSTRUCTION SCHEDULE. ANY DELAY CAUSED DUE TO THE RELOCATION OF UTILITIES SHALL BE INCIDENTAL TO THE CONTRACT AND NO EXTRA COMPENSATION WILL BE ALLOWED. ALL COSTS ASSOCIATED WITH VERIFICATION, PROTECTION OF EXISTING SYSTEMS OR CONNECTION TO THOSE SYSTEMS AS IDENTIFIED ON THE PLANS SHALL BE INCLUDED IN THE CONTRACTOR'S BID.
14. EXISTING UTILITIES. PRIOR TO BEGINNING CONSTRUCTION, THE CONTRACTOR SHALL VERIFY THE SIZE, LOCATION, ELEVATION, AND MATERIAL OF ALL EXISTING UTILITIES WITHIN THE AREA OF CONSTRUCTION. THE CONTRACTOR IS RESPONSIBLE FOR VERIFICATION OF ALL EXISTING UTILITIES AND SOILS CONDITIONS AND SHALL NOTIFY THE ENGINEER IN THE EVENT OF ANY DISCREPANCIES WITH THE PLANS.
15. FIELD REVIEWS. THE CONTRACTOR SHALL NOTIFY THE ENGINEER 48 HOURS PRIOR TO ANY REQUIRED FIELD REVIEWS OR INSPECTIONS AND SHALL SUPPLY ALL EQUIPMENT NECESSARY, LABOR AND MATERIALS FOR INSPECTION AND/OR TEST. ALL WORK SHALL BE OPEN AND SUBJECT TO REVIEW AND/OR INSPECTION BY AUTHORIZED PERSONNEL OF THE COUNTY, OWNER, INVOLVED UTILITY COMPANIES, PROJECT ENGINEER, AND REGULATORY AGENCIES. ALL RECOMMENDATIONS AND REQUIREMENTS OF INSPECTION PERSONNEL OTHER THAN THE OWNER'S SHALL BE REPORTED TO THE ENGINEER PRIOR TO IMPLEMENTATION. COMPENSATION WILL NOT BE ALLOWED FOR WORK WHICH IS NOT AUTHORIZED BY THE ENGINEER OR OWNER.
16. DIFFERING SITE CONDITIONS. THE CONTRACTOR SHALL IMMEDIATELY NOTIFY THE ENGINEER OF ANY DISCREPANCIES FOUND BETWEEN THE DRAWINGS AND THE FIELD CONDITIONS PRIOR TO CONSTRUCTION IN THE AREA OF CONFLICT. ANY DIFFERING SITE CONDITIONS FROM THAT WHICH ARE REPRESENTED ON THE PLANS, WHETHER ABOVE, ON OR BELOW THE SURFACE OF THE GROUND, ARE TO BE BROUGHT TO THE IMMEDIATE ATTENTION OF THE ENGINEER AND THE OWNER IN WRITING.
17. REQUIRED PERMITS. IT IS THE RESPONSIBILITY OF THE CONTRACTOR(S) TO ENSURE THAT ALL REQUIRED PERMITS ARE OBTAINED AND AT THE JOB SITE PRIOR TO THE COMMENCEMENT OF CONSTRUCTION. CONTRACTOR SHALL ABIDE BY ALL PERMIT CONDITIONS.
18. DEWATERING. THE CONTRACTOR SHALL BE RESPONSIBLE FOR OBTAINING AND COMPLYING WITH ANY DEWATERING PERMITS AND/OR APPROVALS NECESSARY FOR THE CONSTRUCTION OF THE PROPOSED FACILITIES AND SYSTEMS.
19. PERMITS. THE CONTRACTOR SHALL OBTAIN ALL REQUIRED PERMITS AND/OR LICENSES TO COMMENCE CONSTRUCTION.
20. USE OF EXISTING MATERIALS. NO EXISTING MATERIAL SHALL BE USED IN NEW CONSTRUCTION UNLESS APPROVED DURING THE SHOP DRAWING APPROVAL PROCESS.
21. EXISTING LANDSCAPE. CONTRACTOR SHALL BE EXTREMELY CAUTIOUS WHEN WORKING NEAR TREES WHICH ARE TO BE SAVED, WHETHER SHOWN ON THE PLAN OR DESIGNATED IN THE FIELD.
22. SHOP DRAWINGS. THE CONTRACTOR SHALL PROVIDE A MINIMUM OF SEVEN (7) COPIES (OR MORE IF SPECIFIED IN THE CONTRACT) OF SHOP DRAWINGS, PRODUCT DATA, MATERIAL SPECIFICATIONS AND OTHER INFORMATION REGARDING CONSTRUCTION MATERIALS AND STRUCTURES AS REQUESTED BY THE OWNER, ENGINEER OR JURISDICTIONAL AGENCY. SHOP DRAWINGS MUST BE NEWLY PREPARED INFORMATION, DRAWN TO ACCURATE SCALE. DO NOT REPRODUCE CONTRACT DOCUMENTS OR COPY STANDARD INFORMATION AS THE BASIS OF SHOP DRAWINGS. STANDARD INFORMATION PREPARED WITHOUT SPECIFIC REFERENCE TO THE PROJECT WILL NOT BE CONSIDERED A SHOP DRAWING.
    - A. BY SUBMITTAL OF ANY SHOP DRAWING OR CATALOG DATA, BEARING AN APPROVAL STAMP, THE CONTRACTOR REPRESENTS THAT IT HAS DETERMINED AND VERIFIED ALL FIELD MEASUREMENTS, FIELD CONSTRUCTION CRITERIA, MATERIALS, DIMENSIONS, CATALOG NUMBERS AND SIMILAR DATA, OR WILL DO SO, AND THAT IT HAS CHECKED AND COORDINATED EACH ITEM WITH OTHER APPLICABLE APPROVED SHOP DRAWINGS AND THE CONTRACT REQUIREMENTS.
    - B. SHOP DRAWINGS AND CATALOG DATA SUBMITTED WITHOUT THE CONTRACTOR'S STAMP OF APPROVAL WILL BE RETURNED TO THE CONTRACTOR WITHOUT REVIEW. APPROVAL OF SHOP DRAWINGS, SAMPLES, OR CATALOG DATA BY THE ENGINEER SHALL NOT AUTHORIZE ANY DEVIATION FROM THE REQUIREMENT OF THE CONTRACT DOCUMENTS.
    - C. ANY PROPOSED SUBSTITUTE OR EQUAL TO THE THAT SHOWN ON THE CONTRACT DOCUMENTS SHALL BE ACCOMPANIED BY CALCULATIONS SUBSTANTIATING EQUIVALENCY. SHOP DRAWINGS WITH SUBSTITUTE MATERIALS NOT ACCOMPANIED BY CALCULATIONS WILL BE RETURNED WITHOUT REVIEW.
    - D. THE CONTRACTOR SHALL CONFIRM COMPATIBILITY OF PIPE SLOPES AND INVERTS DURING SHOP DRAWING AND MATERIALS ORDERING PHASE OF THE PROJECT AND ADVISE THE ENGINEER IN WRITING OF ANY DISCREPANCIES.
    - E. INDIVIDUAL SHOP DRAWINGS FOR ALL PRECAST STRUCTURES ARE REQUIRED. CATALOG LITERATURE WILL NOT BE ACCEPTED FOR PRECAST STRUCTURES.
23. TESTING. THE CONTRACTOR SHALL BE RESPONSIBLE FOR ALL REQUIRED TESTS TO BE PERFORMED BY AN INDEPENDENT TESTING LABORATORY APPROVED BY THE ENGINEER. THE CONTRACTOR UNDERSTANDS THAT ANY AND ALL TESTS, INSPECTIONS, PROCEDURES INCLUDING ALL LABOR, MATERIALS, TIME AND EFFORT IN ORDER TO HAVE ALL WORK DESIGNATED AS FINAL BY THE RESPECTIVE JURISDICTIONAL AUTHORITIES AND THAT SUCH TESTS, INSPECTIONS AND PROCEDURES ARE INCLUDED IN THE BID.
24. RECORD DRAWINGS. RECORD DRAWINGS SHALL BE SUBMITTED IN SUFFICIENT QUANTITIES AS REQUIRED BY THE OWNER, ENGINEER AND JURISDICTIONAL AGENCIES TO COMPLETE THE CLOSE-OUT OF THE PROJECT. THE CONTRACTOR SHALL PROVIDE THE ENGINEER OF RECORD WITH ADEQUATE RECORD DRAWING INFORMATION, WHICH HAS BEEN PREPARED BY A LAND SURVEYOR REGISTERED IN THE STATE OF FLORIDA. THE INFORMATION SHALL BE PROVIDED ON A 24"x36" REPRODUCIBLE MYLAR. THE SURVEYOR SHALL SIGN AND SEAL THE RECORD DRAWINGS. THE FOLLOWING SHALL BE THE MINIMUM REQUIREMENTS FOR RECORD DRAWING INFORMATION
    - A. IF REQUIRED BY THE RESPECTIVE AGENCY, THE MYLARS SHALL BE 24"x36", 3 MIL SEPIA MYLAR.
    - B. THE WORDS "RECORD DRAWINGS" SHALL BE WRITTEN IN BOLD LETTERS IN A CONSPICUOUS PLACE. NO RUBBER STAMP ON PLANS OR MYLARS SHALL BE ACCEPTED.
    - C. ANY SIGNIFICANT CHANGES IN ALIGNMENT, PIPE CONFLICTS, LOCATION OF STORM MANHOLES, CATCH BASINS, ETC. SHALL BE SHOWN TO SCALE ON RECORD DRAWINGS. THE "PROPOSED" ALIGNMENT, ETC. SHALL BE CROSSED OUT.
    - D. THE DRAWINGS SHALL BE LEGIBLE AND THE AS-BUILT DIMENSIONS EASY TO IDENTIFY.
    - E. DATA FOR STORM MANHOLES AND CATCH BASINS (RIM, INVERTS), PIPE SLOPES, AND PIPE LENGTHS AS CONSTRUCTED SHALL BE SHOWN ON THE PLAN SHEET NEXT TO "PROPOSED" DIMENSIONS. THE "PROPOSED" NUMBERS RECORD DRAWING INFORMATION SHALL BE PROVIDED FOR THE CONTROL STRUCTURE, INCLUDING ALL PIPE INVERTS AND PIPE SIZES, AND GRATE ELEVATION. ELEVATIONS AND DIMENSIONS SHALL BE PROVIDED ON THE WEIR, THE BLEEDER ORIFICE AND THE POLLUTION CONTROL BAFFLE (IF APPLICABLE). THE BOTTOM ELEVATION OF STRUCTURE AND ELEVATIONS AND DIMENSIONS OF ANY SLOTS OR ORIFICES IN THE INLET WALLS SHALL BE PROVIDED.
    - F. PERIMETER BERM ELEVATIONS ADJACENT TO THE PROPERTY LINES SHALL BE PROVIDED EVERY 200 LINEAR FEET MINIMUM.
    - G. CROSS SECTIONS OF DRY DETENTION AREAS AND SECTIONS SHALL BE TAKEN EVERY 200 LINEAR FEET MINIMUM. CROSS SECTIONS SHALL DEPICT THE PROPOSED AND ASBUILT DATA INCLUDING ALL GRADE BREAKS.
25. FINAL UTILITY ADJUSTMENTS. ALL UTILITIES SHALL BE ADJUSTED TO NEW FINISH GRADES AND PROPERLY SET TO PAVEMENT CROSS SLOPE AS REQUIRED.

SITE DEMOLITION AND EROSION CONTROL NOTES:

1. SITE ACCESS. SUITABLE STABILIZED ROADS ARE TO BE PROVIDED DURING CONSTRUCTION FOR FIRE AND PARAMEDICAL ACCESS.
2. SITE. CONTRACTOR ACCEPTS THE SITE AS IS. ANY REPAIRS TO EXISTING SITE ELEMENTS INCLUDING PAVEMENT, SIDEWALKS, CURBING, DRAINAGE, SANITARY SEWER, WATER, SIGNAGE & STRIPING SHALL BE INCLUDED IN THE BID PRICE.
3. EROSION CONTROL. THE CONTRACTOR SHALL INSTALL AND MAINTAIN EROSION AND TURBIDITY BARRIERS PRIOR TO AND DURING CONSTRUCTION TO PREVENT VIOLATION OF STATE WATER QUALITY STANDARDS FOR OFFSITE DISCHARGES. THESE BARRIERS SHALL REMAIN IN PLACE UNTIL CONSTRUCTION IS COMPLETED, SOILS ARE STABILIZED, AND VEGETATION HAS BEEN ESTABLISHED. REFERENCE FDOT ROADWAY AND TRAFFIC DESIGN STANDARDS INDICES 102, 103 AND 106 FOR TYPICAL INSTALLATION DETAILS.
4. FILTER FABRIC. FILTER FABRIC SHALL BE INSTALLED ON ALL CATCH BASIN GRATES AND MAINTAINED UNTIL CONSTRUCTION IS COMPLETE.
5. ADJACENT IMPACTS. CONTRACTOR SHALL PROTECT ADJACENT WATER BODIES, WETLANDS AND PROPERTIES FROM DAMAGE BY SEDIMENTATION OR OTHER POTENTIAL CONSTRUCTION RELATED CAUSES.
6. SILT FENCES. SILT FENCES SHALL BE INSTALLED AND MAINTAINED AROUND ALL CLEARING PERIMETERS.
7. SITE CLEARING. CLEAR AREAS INDICATED SHALL BE COMPLETELY CLEAR OF ALL TIMBER, BRUSH, STUMPS, ROOTS, GRASS, WEEDS, RUBBISH AND ALL OTHER DEBRIS AND OBSTRUCTIONS RESTING ON OR PROTRUDING THROUGH THE SURFACE OF THE GROUND. THIS DEBRIS SHALL BE DISPOSED OF IN A LEGAL MANNER. BURNING OF THIS MATERIAL IS NOT PERMITTED UNLESS THE CONTRACTOR OBTAINS SPECIFIC PERMITS ALLOWING SUCH ACTIVITY.

GEOMETRIC, SIGNING, AND STRIPING NOTES

1. DIMENSIONS. ALL DIMENSIONS TO EDGE OF PAVEMENT OR FACE OF CURB UNLESS OTHERWISE NOTED.
2. REFERENCES. WORK SHALL BE PERFORMED IN ACCORDANCE WITH THE FLORIDA DEPARTMENT OF TRANSPORTATION (FDOT) STANDARD SPECIFICATIONS FOR ROAD AND BRIDGE CONSTRUCTION (LATEST EDITION), FDOT TRAFFIC DESIGN STANDARDS (LATEST EDITION), MANUAL ON UNIFORM TRAFFIC CONTROL DEVICES (MUTCD) (LATEST EDITION) AND THE PALM BEACH COUNTY TYPICALS FOR PAVEMENT MARKINGS, SIGNING & GEOMETRICS (T-P-13). ALL REFERENCES ARE INCORPORATED INTO THE PLAN DOCUMENTS. CONTRACTOR IS RESPONSIBLE FOR OBTAINING COMPLETE COPIES OF THE LATEST EDITION OF THE REFERENCES.
3. PARKING LOT STRIPING. ALL PARKING STALL STRIPING SHALL BE TRAFFIC PAINT AND CONFORM TO THE RESPECTIVE JURISDICTIONAL AUTHORITY REQUIREMENTS.
4. ROADWAY STRIPING. ALL ROADWAY STRIPING SHALL BE THERMOPLASTIC IN ACCORDANCE WITH THE RESPECTIVE JURISDICTIONAL AUTHORITY REQUIREMENTS.
5. BUILDING TIES AND DIMENSIONS. BUILDING TIES SHOWN ARE APPROXIMATE. CONTRACTOR TO VERIFY WITH ARCHITECTURAL PLANS. BUILDINGS SHOWN ON THESE DRAWINGS MAY NOT REFLECT MINOR ARCHITECTURAL REVISIONS AND SHOULD NOT BE RELIED UPON FOR STAKING OF BUILDINGS. CONTRACTOR SHOULD OBTAIN LATEST ARCHITECTURAL INFORMATION AND ESTABLISH GEOMETRIC DATA FOR STAKING. SHOULD THE CONTRACTOR IDENTIFY A CONFLICT BETWEEN THE ARCHITECTURAL INFORMATION AND THESE DRAWINGS, NOTIFY THE ENGINEER IN WRITING.
6. MAINTENANCE OF TRAFFIC. CONTRACTOR SHALL BE RESPONSIBLE FOR FURNISHING A PROPER TRAFFIC MAINTENANCE AND CONTROL PLAN IN ACCORDANCE WITH REGULATORY STANDARDS. INCLUDED WILL BE THE LABOR, EQUIPMENT AND MATERIALS REQUIRED TO IMPLEMENT THAT PLAN. ALL WORK MUST BE DONE IN ACCORDANCE WITH AGENCY REQUIREMENTS AND ANY REQUIRED PERMITS OR APPROVALS MUST BE APPLIED FOR AND OBTAINED BY THE CONTRACTOR.

PAVING, GRADING, AND DRAINAGE NOTES:

1. REFERENCES. WORK SHALL BE PERFORMED IN ACCORDANCE WITH THE FLORIDA DEPARTMENT OF TRANSPORTATION (FDOT) STANDARD SPECIFICATIONS FOR ROAD AND BRIDGE CONSTRUCTION, LATEST EDITION, AND FDOT ROADWAY TRAFFIC DESIGN STANDARDS, LATEST EDITION. ALL FDOT INDICES ARE INCORPORATED AS PLAN REFERENCES. CONTRACTOR IS RESPONSIBLE FOR OBTAINING COMPLETE COPIES OF THE LATEST EDITION OF THE FDOT INDICES.
2. SITE FAMILIARIZATION. PRIOR TO BID PREPARATION, THE CONTRACTOR MUST BECOME FAMILIAR WITH THE OVERALL SITE CONDITIONS AND PERFORM ADDITIONAL INVESTIGATIONS AS DETERMINED NECESSARY TO UNDERSTAND THE LIMIT AND DEPTH OF EXPECTED ORGANIC MATERIAL, ADEQUACY OF EXISTING MATERIALS AS FILL, DEWATERING REQUIREMENTS, CLEAN FILL REQUIRED FROM OFFSITE AND MATERIALS TO BE DISPOSED OF OFFSITE. ANY DELAY, INCONVENIENCE OR EXPENSE CAUSED TO THE CONTRACTOR DUE TO INADEQUATE INVESTIGATION OF EXISTING CONDITIONS SHALL BE INCIDENTAL TO THE CONTRACT AND NO EXTRA COMPENSATION WILL BE ALLOWED. THE MATERIALS ANTICIPATED TO BE ENCOUNTERED DURING CONSTRUCTION MAY REQUIRE DRYING PRIOR TO USE AS BACKFILL AND THE CONTRACTOR MAY HAVE TO IMPORT MATERIALS, AT NO EXTRA COST, FROM OFFSITE TO MEET THE REQUIREMENTS FOR COMPACTION AND PROPER FILL.
3. SITE FILL BALANCE. IT IS THE CONTRACTOR'S RESPONSIBILITY TO DETERMINE EXISTING SITE CONDITIONS OF SOIL DURING THE BID PREPARATION TO DETERMINE IF ANY OFF SITE MATERIALS WILL NEED TO BE IMPORTED TO ACHIEVE THE GRADES SPECIFIED ON THE PLANS.
4. RESTORATION. ALL DISTURBED AREAS SHALL BE RESTORED TO PRE-CONSTRUCTION CONDITION OR BETTER AS DETERMINED BY THE ENGINEER, OWNER AND RESPECTIVE JURISDICTIONAL AUTHORITY.
5. HORIZONTAL CONTROL AND LAYOUT. CONTRACTOR/OWNER SHALL COORDINATE WITH A REGISTERED SURVEYOR TO LAY OUT LINE, GRADES, STRUCTURES, LOT CORNERS, ETC. AS NECESSARY TO CONSTRUCT THE PROPOSED FACILITIES IN ACCORDANCE WITH THE PLANS AND SPECIFICATIONS. BENCH MARKS SHALL BE ESTABLISHED BY A REGISTERED SURVEYOR. BENCH MARKS SHALL BE PERMANENT AND EASILY ACCESSIBLE AND MAINTAINED AND REPLACED IF DISTURBED OR DESTROYED. HORIZONTAL CONTROL SHALL SIMILARLY BE ESTABLISHED AND MAINTAINED.
6. CLEARING, GRADING AND DISPOSAL. CLEARING AND GRADING SHALL CONFORM TO SECTION 110 OF THE FDOT STANDARD SPECIFICATIONS FOR ROAD AND BRIDGE CONSTRUCTION, LATEST EDITION. CLEARING SHALL BE CONTAINED TO THE CONSTRUCTION AREA AND/OR AS DIRECTED BY THE OWNER AND/OR HIS REPRESENTATIVE. ALL ROOTS, STUMPS, OR OTHER OBSTRUCTIONS SHALL BE REMOVED TO A DEPTH OF 18" BELOW NATURAL GRADE OR DESIGN GRADE WHICHEVER IS LOWER. ALL DEBRIS SHALL BE REMOVED FROM THE AREA AND BE DISPOSED OF LEGALLY.
7. EXCAVATION AND EMBANKMENT. ALL EXCAVATION AND EMBANKMENT SHALL CONFORM TO THE FDOT STANDARD SPECIFICATIONS FOR ROAD AND BRIDGE CONSTRUCTION, LATEST EDITION.
8. EARTHWORK. NO SEPARATE PAYMENT SHALL BE PROVIDED TO THE CONTRACTOR FOR EARTHWORK ASSOCIATED WITH THIS CONTRACT. ALL COSTS ASSOCIATED WITH SITE PREPARATION NECESSARY TO EXECUTE THE WORK SET FORTH IN THE CONTRACT SHALL BE INCLUDED IN THE BID.
9. EXCESS MATERIAL. ANY EXCESS MATERIAL REMAINING UPON COMPLETION OF CONSTRUCTION SHALL BE REMOVED TO AN ACCEPTABLE LOCATION AT THE EXPENSE OF THE CONTRACTOR. AT THE OWNER'S OPTION, A LOCATION MAY BE IDENTIFIED FOR MATERIAL STOCK PILING OR THE OWNER MAY INSTRUCT THE CONTRACTOR TO REMOVE THE EXCESS MATERIAL IN WHICH CASE THE CONTRACTOR IS TO LEGALLY DISPOSE OF ALL MATERIALS OFFSITE.
10. FINISHED SITE GRADING. THE CONTRACTOR SHALL BE RESPONSIBLE FOR FINAL GRADING OF THE SITE TO WITHIN ±0.1 FOOT OF ALL THE PROPOSED FINISHED GRADE ELEVATIONS THROUGHOUT THE PROJECT SITE AS DEPICTED ON THE PLANS. ELEVATIONS OF CONSTRUCTED FACILITIES, I.E. ROADWAYS, DRAINAGE, ETC. ARE TO BE AS INDICATED ON THE PLANS UNLESS APPROVED DIFFERENTLY IN WRITING.
11. BUILDING AREAS. ALL ORGANIC AND OTHER UNSUITABLE MATERIAL IN BUILDING OR PAVEMENT AREAS SHALL BE REMOVED AND REPLACED IN ACCORDANCE WITH THE GEOTECHNICAL REPORT RECOMMENDATIONS AND SOUND CONSTRUCTION PRACTICES.
12. LANDSCAPE AREAS. ALL LANDSCAPE ISLANDS SHALL CONTAIN SUITABLE LANDSCAPE MATERIAL FOR LANDSCAPE INSTALLATION. ALL LANDSCAPE AREAS SHALL BE SUITABLY SLOPED TO PROVIDE POSITIVE DRAINAGE.
13. SOD AREAS. ELEVATIONS OF GRASSED AREAS ARE GIVEN AT FINISHED SOD/SEED GRADE. CONTRACTOR TO GRADE AREAS RECEIVING SOD LOWER TO ACCOMMODATE SOD THICKNESS.
14. UNSUITABLE MATERIALS. WHERE ENCOUNTERED, UNSUITABLE MATERIAL SHALL BE REMOVED TO A DEPTH AND AREA DETERMINED BY THE ENGINEER. BACKFILLING SHALL BE IN LAYERS NOT GREATER THAN 8" THICKNESS AND COMPACTED TO 98 PERCENT OF MAXIMUM DENSITY AS DETERMINED BY AASHTO T-180. ANY UNSTABLE SOIL AND/OR SOIL CONTAINING ORGANIC MATERIAL ENCOUNTERED DURING CONSTRUCTION, INCLUDING BUT NOT LIMITED TO MUCK, SILT, SLUDGE, AND MARL SHALL BE REMOVED AND SHALL BE REPLACED BY MATERIAL ACCEPTABLE TO THE ENGINEER. IF ANY ROCK, HARDPAN, ETC. IS ENCOUNTERED DURING CONSTRUCTION OF ANY ITEMS, THE REMOVAL AND BACKFILL REQUIRED SHALL BE CONSIDERED INCIDENTAL TO CONSTRUCTION OF THAT ITEM AND NO SEPARATE PAYMENT WILL BE MADE.
15. GRADING. GRADING FROM PROPOSED TO EXISTING CONDITIONS SHALL NOT BE STEEPER THAN 3H:1V NOR FLATTER THAN 20H:1V. ALL SWALES AND SLOPES SHALL BE SODDED AFTER GRADING.
16. ELEVATIONS. ELEVATIONS GIVEN ADJACENT TO CURB OR FRONT OF SIDEWALK ARE CONSIDERED EDGE OF PAVEMENT GRADES UNLESS OTHERWISE NOTED.
17. POSITIVE DRAINAGE. CONTRACTOR IS RESPONSIBLE FOR GRADING ALL PAVEMENT TO DRAIN POSITIVELY. INTERSECTIONS SHALL BE TRANSITIONED TO PROVIDE A SMOOTH DRIVING SURFACE WHILE MAINTAINING POSITIVE DRAINAGE. SHOULD AREAS OF POOR DRAINAGE BE OBSERVED, THE CONTRACTOR SHALL NOTIFY THE ENGINEER PRIOR TO PLACEMENT OF CURBS OR PAVEMENT COURSES, SO THAT RECOMMENDATIONS FOR CORRECTION CAN BE MADE.

DOCUMENTS PREPARED BY

CIVIL DESIGN, INC.
ENGINEERING CONSULTANTS
Civil Design, Inc.
312 9th Street
West Palm Beach, FL 33401
T: 561.659.5760
F: 561.659.5772
www.civil-design.com
Engineering Business No. 9664

CDI PROJECT No. 14413

HARVARD • JOLLY
ARCHITECTURE

Ft. Lauderdale 954-486-7910
Ft. Myers 239-275-7774
Jacksonville 904-396-3300
Orlando 407-667-7727
Punta Gorda 941-575-0403
St. Petersburg 727-896-4611
Tampa 813-286-8206
West Palm Beach 561-478-4457
AAC000119
www.HarvardJolly.com
WEST PALM BEACH FL

NEW CLASSROOM BUILDING
RIVIERA BEACH MARITIME ACADEMY
RIVIERA BEACH, FLORIDA
CONTRUCTION DOCUEMENTS

Comm. No.	214031.00
Date	09-24-14
Drawn	-
Revised	

copyright 2014

GENERAL NOTES

C0.1

PAVING, GRADING & DRAINAGE NOTES CONTINUED :

18. ADA AREAS. PAVEMENT GRADES AT HANDICAP PARKING SPACES SHALL NOT EXCEED 2% IN ANY DIRECTION. PROPOSED AND EXISTING SIDEWALKS SHALL BE RAMPED FLUSH WITH PAVEMENT. RAMPS SHALL NOT EXCEED A 12H 1V SLOPE. SIDEWALK RAMPS SHALL BE TEXTURED IN CONFORMANCE WITH FDOT STANDARDS EXCEPT WHERE LOCAL CODES DICTATE OTHERWISE OR IF INDICATED OTHERWISE ON THE PLANS. CONTRACTOR SHALL COORDINATE WITH THE ENGINEER AND THE JURISDICTIONAL AUTHORITY FOR FORM BOARD AND PRE-POUR INSPECTIONS PRIOR TO ANY CONCRETE INSTALLATION. IT IS THE CONTRACTOR'S SOLE RESPONSIBILITY TO ENSURE THAT ALL RAMP TEXTURED SURFACES AND SIDEWALK LONGITUDINAL AND CROSS SLOPES ARE IN CONFORMANCE WITH LOCAL, STATE AND FEDERAL ADA AND BUILDING CODE STANDARDS.

19. ASPHALT MIX DESIGN. BEFORE CONSTRUCTION OF ASPHALT SURFACE, A JOB MIX FORMULA SHALL BE SUBMITTED FOR APPROVAL TO THE ENGINEER.

20. ROADWAY CONSTRUCTION. ALL ROADWAY CONSTRUCTION AND MATERIAL SHALL CONFORM TO THE APPLICABLE FDOT STANDARD SPECIFICATIONS FOR ROAD AND BRIDGE CONSTRUCTION, LATEST EDITION. ALL SUBBASE, BASE COURSE, PRIME COAT, TACK COAT AND ASPHALT MATERIALS SHALL BE INSTALLED IN ACCORDANCE WITH FDOT STANDARD SPECIFICATIONS (LATEST EDITION).

21. DRAINAGE STRUCTURES. ALL DRAINAGE STRUCTURES SHALL BE CONSTRUCTED AS PER THE PLANS AND IN ACCORDANCE WITH FDOT STANDARD SPECIFICATIONS FOR ROAD AND BRIDGE CONSTRUCTION (LATEST EDITION). ALL GRATES SHALL BE SECURED TO THE DRAINAGE STRUCTURE WITH A CHAIN AND EYEBOLT.

22. PIPE LENGTHS. PIPE LENGTHS SHOWN ON THE PLANS REPRESENT SCALED DISTANCES BETWEEN CENTERLINES OF DRAINAGE STRUCTURES AND FROM INVERTS OF ENDWALLS AND/OR MITERED END SECTIONS.

23. PIPE INSTALLATION. PIPE TRENCH SHALL BE DRY WHILE PIPE IS BEING LAID AND TO BE BEDDED PER DETAIL AND IN CONFORMANCE WITH THE FDOT STANDARD SPECIFICATIONS FOR ROAD AND BRIDGE CONSTRUCTION (LATEST EDITION). ALL CORRUGATED PIES SHALL BE INSTALLED WITH MAXIMUM LENGTHS IN ORDER TO MINIMIZE JOINTS.

24. PIPE TRENCHES. PIPE TRENCHES TO BE EXCAVATED AND BACKFILLED IN ACCORDANCE WITH FDOT STANDARD SPECIFICATIONS FOR ROAD AND BRIDGE CONSTRUCTION (LATEST EDITION).

25. DRAINAGE PIPING. ALL DRAINAGE PIPES TO BE REINFORCED CONCRETE PIPE (RCP) UNLESS NOTED OTHERWISE ON THE PLANS.

26. REINFORCED CONCRETE PIPE (RCP). REINFORCED CONCRETE PIPE (RCP) SHALL BE PER ASTM C-76 CLASS III, UNLESS OTHERWISE SPECIFIED. INSTALLATION OF RCP SHALL BE IN ACCORDANCE WITH FDOT SPECIFICATIONS (LATEST EDITION).

27. CORRUGATED ALUMINUM PIPE (CAP). CAP SHALL CONFORM WITH THE REQUIREMENTS OF AASHTO M-196 AND WITH THE FDOT SPECIFICATIONS (LATEST EDITION). CAP TO BE HELICAL (SPIRAL FLOW). ALL CONNECTION BANDS, FOR CORRUGATED PIPES, SHALL BE CORRUGATED, LAP-TYPE, IN CONFORMANCE WITH AASHTO M-16, AND TO BE WATERTIGHT BY USING A GASKET AT LEAST SIX (6) INCHES WIDE. ALL JOINTS ON STORM SEWER PIPE SHALL BE MADE UP WITH ONE-HALF INCH NEOPRENE. ALL BANDS SHALL HAVE THE SAME CORRUGATION DESIGN AS THE PIPE. THE WIDTH OF THE BANDS SHALL BE AS FOLLOWS: 12 INCH WIDE UP TO 48 INCH DIAMETER PIPE AND 24 INCH WIDE OVER 48 INCH DIAMETER PIPE. THE REQUIREMENTS OF FDOT DM08036 WILL BE ADHERED TO WITH ANNULAR BANDING OF JOINTS REQUIRED.

28. ROOF DRAIN PIPING. ALL ROOF DRAIN PIPING (OUTSIDE THE BUILDING) TO BE PVC SCHEDULE 40 UNLESS OTHERWISE NOTED. ALL FITTINGS REQUIRED TO MAKE A FULLY OPERATIONAL DRAINAGE SYSTEM MAY NOT BE SHOWN ON THE PLANS. ALL FITTINGS AND MATERIALS REQUIRED TO COMPLETE THE PROJECT ARE TO BE INCLUDED IN THE CONTRACTOR'S BID.

29. DRAINAGE CONNECTIONS. CONTRACTOR SHALL BE RESPONSIBLE FOR REMOVAL OF DEBRIS AND SILT WHERE CONNECTIONS TO EXISTING DRAINAGE STRUCTURES OR SWALES ARE TO BE PERFORMED. SWALES, DITCHES, LAKES, ETC. SHALL BE RESTORED TO THEIR ORIGINAL DESIGN CROSS SECTION AND SODDED. SUCH REMOVAL AND RESTORATION SHALL BE TO THE POINT OF LEGAL POSITIVE OUTFALL.

30. DRAINAGE JOINT WRAPPING. ALL DRAINAGE PIPE JOINTS TO BE WRAPPED IN FILTER FABRIC PER FDOT INDEX 280. THE FIRST JOINT OF PIPE ENTERING OR LEAVING A DRAINAGE STRUCTURE SHALL BE WRAPPED WITH FILTER FABRIC PER FDOT SPECIFICATIONS.

31. DRAINAGE LAMPING. ALL DRAINAGE SYSTEMS SHALL BE PUMPED DOWN BELOW ONE-THIRD OF THE DIAMETER OF THE PIPE (FROM THE INVERT) AND LAMPED AS A REQUIREMENT OF THE FINAL DRAINAGE INSPECTION.

32. SUBGRADE. SUBBASE SHALL BE FREE OF MUCK, STUMPS, ROOTS, UNDERBRUSH, VEGETATIVE MATTER, GARBAGE, TRASH OR ANY MATERIAL THAT WILL NOT PROVIDE A SUITABLE STABLE, CLEAN SUBGRADE. SUBGRADE SHALL BE AS SHOWN ON THE PLANS AND TO BE COMPACTED TO 98 PERCENT OF THE MAXIMUM DENSITY AS DETERMINED BY AASHTO T-180 UNLESS OTHERWISE NOTED ON THE PLANS.

33. UNDER PAVEMENT UTILITIES AND CONDUITS. THE SEQUENCE OF CONSTRUCTION SHALL BE SUCH THAT ALL UNDERGROUND INSTALLATIONS OF ANY KIND, INCLUDING IRRIGATION AND ELECTRICAL CONDUITS, THAT WILL REMAIN UNDER THE PROPOSED PAVEMENT OR WITHIN 10 FEET OF ITS EDGES SHALL BE INSTALLED PRIOR TO CONSTRUCTION OF THE BASE.

34. SOIL STABILIZATION. THE SOILS MAY REQUIRE PROPER SOIL STABILIZATION MIX DESIGNS AND STRINGENT QUALITY CONTROL OF FIELD MIXING APPLICATION ON THE DESIGN MIX IN ORDER TO OBTAIN AN EFFECTIVE STABILIZED SOIL. CONSTRUCTION SPECIFICATIONS SHOULD REQUIRE THAT THE SOIL BE SAMPLED AND MIX DESIGN(S) PREPARED AND TESTED BY A CERTIFIED TESTING LAB. THE MIX DESIGN SHOULD BE SPECIFIED OR OTHERWISE PREPARED AND TESTED BY A TESTING LAB. THE MIX DESIGN SHOULD BE SPECIFIED OR OTHERWISE ADMINISTERED CLOSELY DURING FIELD INSTALLATIONS OR CONSTRUCTION, INCLUDING PERFORMANCE OF FREQUENT LBR TESTS. STABILIZED SUBGRADE SHALL, AT A MINIMUM, BE TESTED TO MEET A MINIMUM OF LBR 40 VALUE OR FBV 50 AS STATED ON THE PLANS.

35. BASE. BASE SHALL BE AS SHOWN ON SECTION AND SHALL BE COMPACTED TO 98 PERCENT OF THE MAXIMUM DENSITY AS DETERMINED BY AASHTO T-180 UNLESS OTHERWISE NOTED ON THE PLANS.

36. ASPHALT TACK AND PRIME COATS. PRIME COAT SHALL BE APPLIED AT THE RATE OF 0.15 GALLONS PER SQUARE YARD. WHERE REQUIRED, TACK SHALL BE APPLIED AT THE RATE OF 0.08 GALLONS PER SQUARE YARD.

37. UTILITIES BY OTHERS. AT NO ADDITIONAL COST TO THE OWNER, THE CONTRACTOR SHALL PROVIDE ACCESS AND ALLOW FOR COORDINATION SERVICES TO ACCOMMODATE UTILITIES, CONDUIT AND/OR SLEEVE CONSTRUCTION BY OTHERS. ANY UTILITIES, CONDUITS AND/OR SLEEVES INSTALLED BY OTHERS AND DAMAGED BY THE CONTRACTOR SHALL BE REPAIRED AT THE CONTRACTOR'S EXPENSE.

38. CURB TRANSITIONS. ALL EXPOSED ENDS OF CURB SHALL TRANSITION TO FINISHED GRADE PER FDOT INDEX 300.

39. CONCRETE. ALL CONCRETE (CURBS, SIDEWALKS, STRUCTURES, ETC.) SHALL BE 3,000 PSI CONCRETE (MINIMUM 28 DAY COMPRESSIVE STRENGTH) UNLESS OTHERWISE SPECIFIED.

40. REINFORCING STEEL. ALL REINFORCING STEEL SHALL CONFORM TO ASTM A-615 AND HAVE A TENSILE STRENGTH OF 60,000 PSI OR AS OTHERWISE NOTED.

41. FIELD REVIEWS. FIELD REVIEWS OF CONSTRUCTED FACILITIES WILL BE REQUIRED DURING THE CONSTRUCTION PROCESS. THE CONTRACTOR IS TO NOTIFY THE ENGINEER A MINIMUM OF 48 HOURS PRIOR TO THE REQUESTED TIME FOR REVIEW OF THE COMPLETED ITEMS. CONTRACTOR TO PROVIDE ALL LABOR, EQUIPMENT AND MATERIALS NECESSARY TO ACCOMMODATE THE FIELD REVIEW. THESE REVIEWS INCLUDE BUT ARE NOT LIMITED TO:

A. DRAINAGE PIPE AND STRUCTURE REVIEW
B. SUBGRADE REVIEW
C. CURB REVIEWS
D. BASE REVIEWS
E. PUMP OUT AND LAMPING OF DRAINAGE SYSTEM
F. ASPHALT REVIEWS
G. SEMI-FINAL AND FINAL REVIEWS

42. COMPLETENESS FOR REVIEW. FACILITIES MUST BE COMPLETED PRIOR TO SCHEDULING THE FIELD REVIEW. IF A FIELD REVIEW FAILS TO MEET THE AGENCY REQUIREMENTS AND AN ADDITIONAL REVIEW IS REQUIRED, THE CONTRACTOR WILL BE RESPONSIBLE TO PAY ANY FEES ASSOCIATED WITH THE ADDITIONAL REVIEW.

43. TESTING. TESTING OF CONSTRUCTION MATERIALS AND/OR CONSTRUCTED FACILITIES WILL BE REQUIRED AS OUTLINED IN THE GOVERNING SPECIFICATIONS AS NECESSARY TO MEET THE REQUIREMENTS OF THE JURISDICTIONAL AGENCIES. ALL TESTING IS TO BE DONE BY A FLORIDA LICENSED TESTING LABORATORY. THE CONTRACTOR IS TO SUBMIT ALL REQUIRED TESTS ON UTILITY EMBANKMENT, BACKFILL, SUBGRADE, BASE AND SURFACE COURSE MATERIAL TO THE ENGINEER PRIOR TO ANY REQUEST FOR PAYMENT. IF ANY TESTS FAIL TO MEET THE SPECIFICATIONS, THE CONTRACTOR, AT ITS EXPENSE, SHALL CORRECT ALL DEFICIENT WORK AND SUBMIT TEST RESULTS INDICATING COMPLIANCE WITH THESE SPECIFICATIONS PRIOR TO ANY REQUEST FOR PAYMENT.

44. DENSITY TESTING. THE CONTRACTOR SHALL BE RESPONSIBLE FOR OBTAINING THE NECESSARY TESTING TO ASSURE THAT THE PROPER COMPACTION HAS BEEN ACHIEVED ON THE SUBGRADE, BASE MATERIAL, PIPE BASE MATERIAL AND ALL OTHER PERTINENT AREAS THAT HAVE BEEN COMPLETED. THE CONTRACTOR SHALL BEAR ALL COSTS ASSOCIATED WITH TESTING AND RETESTING THE AREAS AND SHALL PROVIDE THE OWNER AND THE ENGINEER COPIES OF ALL TEST RESULTS. ALL REPORTS ARE TO BE SIGNED AND SEALED BY A REGISTERED GEOTECHNICAL ENGINEER IN THE STATE OF FLORIDA.

45. VERTICAL DISTRIBUTION OF DENSITY TESTING. NUCLEAR DENSITY COMPACTION TESTS ARE TO BE TAKEN ON EVERY LIFT PLACED (12" MAXIMUM THICKNESS), STARTING WITH THE SOIL AT THE SPRINGLINE OF THE UTILITY OR AT THE BASE OF ANY STRUCTURE AND PROCEEDING UPWARD TO GRADE AT THE LOCATIONS DEFINED BY THE HORIZONTAL DISTRIBUTION OF DENSITY TESTING NOTE. IF THICKER LIFTS ARE APPROVED AND IMPLEMENTED, DENSITY TESTING SHALL BE PERFORMED VIA DIG DOWNS TO SUFFICIENT DEPTH TO TEST EACH 12 INCHES FOR THE FULL THICKNESS OF LIFT.

46. HORIZONTAL DISTRIBUTION OF DENSITY TESTING. DENSITY TESTING SHALL BE PERFORMED AT THE FOLLOWING MINIMUM LOCATIONS WITH HORIZONTAL SPACING PER THE VERTICAL DISTRIBUTION OF DENSITY TAKING NOTE. MORE SPECIFICALLY:

A. PIPE TRENCHES - TESTS SHALL BE PERFORMED AT RANDOMLY SELECTED LOCATIONS WITHIN EACH 150 FOOT INTERVAL (MAXIMUM) ALONG THE LENGTH OF A PIPE INSTALLATION, AND BETWEEN EACH SET OF STRUCTURES SEPARATED BY LESS THAN 150 FEET, HOWEVER, NO FEWER THAN TWO TESTS TO BE TAKEN. AT LEAST ONE TEST SHALL BE PERFORMED FOR EVERY 12 INCH BACKFILL LAYER, STARTING WITH THE FIRST TEST PERFORMED AT THE PIPE SPRINGLINE (COVERING THE 12" LAYER BELOW SPRINGLINE ELEVATION).

B. STRUCTURES - TESTS SHALL BE PERFORMED AT EACH MANHOLE OR DRAINAGE STRUCTURE. AT LEAST ONE TEST SHALL BE PERFORMED FOR EVERY 12 INCH BACKFILL LIFT, STARTING WITH THE FIRST TEST PERFORMED AT THE BASE OF THE STRUCTURE (COVERING THE 12" LAYER BELOW BASE ELEVATION).

C. SUBGRADE - TESTS SHALL BE PERFORMED AT RANDOMLY SELECTED LOCATIONS WITHIN EACH 300 FOOT INTERVAL (MAXIMUM) ALONG THE LENGTH OF THE ROADWAY, SIDEWALK, OR PATHWAY AND EVERY 2,000 SQUARE FEET OR LESS OF PARKING AREA. NO LESS THAN THREE (3) TESTS MINIMUM.

D. BASE ROCK - TESTS SHALL BE PERFORMED AT RANDOMLY SELECTED LOCATIONS WITHIN EACH 300 FOOT INTERVAL (MAXIMUM) ALONG THE LENGTH OF THE ROADWAY, SIDEWALK, OR PATHWAY AND EVERY 2,000 SQUARE FEET OR LESS OF PARKING AREA. NO LESS THAN THREE (3) TESTS MINIMUM.

E. ROAD CROSSINGS - TESTS SHALL BE PERFORMED FOR EACH 12 INCH LIFT WITHIN ANY OPEN CUT ROAD CROSSING LOCATION WITHIN EACH 150 FOOT INTERVAL. NO LESS THAN TWO (2) TESTS MINIMUM.

47. TACTILE SURFACES - ALL TACTILE SURFACES SHALL COMPLY WITH ALL APPLICABLE CODES AND REQUIREMENTS INCLUDING BUT NOT LIMITED TO, THE FLORIDA DEPARTMENT OF TRANSPORTATION (FDOT) INDEX 304 AND THE FLORIDA ACCESSIBILITY CODE FOR BUILDING CONSTRUCTION.

WATER AND SANITARY SEWER NOTES :

1. AVAILABILITY OF SYSTEMS FOR ASBUILT MEASUREMENTS. CONTRACTOR SHALL BE RESPONSIBLE FOR MAKING ALL WATER MAIN BENDS, VALVES, HYDRANTS, TEES AND WATER SERVICE TAPS AVAILABLE TO FACILITATE DIRECT PHYSICAL MEASUREMENT OF RECORD DRAWING INFORMATION. THE CONTRACTOR SHALL COORDINATE WITH THE OWNER, ENGINEER, AND SURVEYOR TO OBTAIN RECORD DRAWING MEASUREMENTS SO AS NOT TO ENDANGER THE GENERAL PUBLIC OR CREATE DELAY IN THE PROGRESS OF THE PROJECT. CONTRACTOR SHALL PROVIDE 48 HOURS MINIMUM WRITTEN NOTICE.

2. SYSTEM CLEANING. CONTRACTOR SHALL THOROUGHLY CLEAN ALL SANITARY AND DRAINAGE GRAVITY SYSTEMS TO FACILITATE MEASUREMENT OF RECORD DRAWING INFORMATION. CLEANING SHALL BE PERFORMED PRIOR TO "PRE-LAMPING" INSPECTIONS BY ENGINEER. CONTRACTOR SHALL ALSO HAVE ALL RIMS INSTALLED PRIOR TO PRE-LAMPING.

3. WATER MAINS. ALL WATER MAINS TO BE DUCTILE IRON PIPE (DIP). ALL LINES FROM THE WATER MAIN TO A FIRE HYDRANT TO BE DUCTILE IRON PIPE (DIP) UNLESS OTHERWISE NOTED ON THE PLANS. ALL LINES FROM THE WATER MAIN TO A FIRE LINE BACKFLOW TO BE DUCTILE IRON PIPE (DIP) UNLESS OTHERWISE NOTED ON THE PLANS.

4. WATER SERVICE LINES. ALL WATER SERVICE LINES TO BE PVC SCHEDULE 40 UNLESS NOTED OTHERWISE ON THE PLANS.

5. SANITARY SEWER LINES. ALL SANITARY SEWER GRAVITY MAINS LESS THAN 12' IN DEPTH TO BE PVC SDR 26 UNLESS NOTED OTHERWISE ON PLANS.

6. MINIMUM PIPE DEPTHS. ALL PRESSURE PIPE TO BE INSTALLED AT MIN. 36" COVER FROM FINISHED GRADE.

7. VALVES. ALL VALVES ARE TO BE CONSTRUCTED COMPLETELY IN GRASSED AREAS UNLESS SHOWN OTHERWISE ON THE PLANS. NO VALVES SHALL BE CONSTRUCTED WITHIN THE SIDEWALK, CURB OR PARKING STALLS.

8. EXISTING UTILITIES IMPACTED. ALL EXISTING VALVES AND MANHOLES IMPACTED BY CONSTRUCTION OF THIS PROJECT SHALL BE ADJUSTED IN ACCORDANCE WITH THE UTILITY SPECIFICATIONS.

9. ELEVATIONS. ALL ELEVATIONS REFER TO NGVD '29.

10. FIELD VERIFICATION. PRIOR TO CONSTRUCTION, IT IS THE RESPONSIBILITY OF THE CONTRACTOR TO FIELD VERIFY (ELEVATION & LOCATION) ALL EXISTING UTILITIES. ANY DISCREPANCIES SHALL BE BROUGHT TO THE ATTENTION OF THE ENGINEER PRIOR TO CONTINUATION OF WORK.

11. PIPE COLOR INFUSION. ALL WATER MAINS (BLUE), FORCE MAINS (GREEN), AND RECLAIM WATER MAINS (PURPLE) SHALL BE P.V.C. (C-900) COLORED DURING INFUSION PROCESS, UNLESS A DIFFERENT MATERIAL IS OTHERWISE NOTED.

12. HORIZONTAL SEPARATION FROM DRAINAGE. ALL WATER AND SANITARY SERVICES SHALL BE CONSTRUCTED A MINIMUM OF 5' FROM DRAINAGE STRUCTURES.

13. MAGNETIC TAPE. MAGNETIC TAPE IS REQUIRED FOR PVC WATER MAINS, FORCE MAINS, AND RECLAIM WATER MAINS AND SHALL BE 6" WIDE, IMPRINTED WITH 2" HIGH LETTERING READING "CAUTION - WATER MAIN BURIED BELOW", "CAUTION - FORCE MAIN BURIED BELOW" OR "CAUTION - RECLAIM WATER MAIN BURIED BELOW", AS REQUIRED.

14. TESTING. PRESSURE TESTING AND CERTIFICATION SHALL FOLLOW RIVIERA BEACH UTILITY DISTRICT & PALM BEACH COUNTY HEALTH DEPARTMENT STANDARDS, LATEST EDITIONS.

15. VERTICAL PIPE SEPARATIONS. ALL WATER MAINS TO CROSS OVER SANITARY SEWER SERVICES, WHERE 12" MINIMUM CLEARANCE CANNOT BE MAINTAINED, 20 LINEAR FEET OF DUCTILE IRON WATER MAIN SHALL BE CENTERED ON THE CROSSING AND THE SEWER SERVICE SHALL BE C-900, SDR-18. IN NO CASE SHALL THERE BE LESS THAN 6" CLEARANCE.

16. RECORD DRAWING NOTE. RECORD DRAWINGS SHALL INCLUDE ALL INFORMATION AS REQUIRED BY THE UTILITY DISTRICT AND SHOWN IN THE AS-BUILT LOCATION.

17. STATE PLANE COORDINATES FOR RECORD DRAWINGS. ALL RECORD DRAWINGS SHALL BE DRAWN IN THE STATE PLANE COORDINATE SYSTEM. STATE PLANE COORDINATES ARE REQUIRED FOR ALL AS-BUILT UTILITY OBJECTS.

18. WATER MAIN DUCTILE IRON PIPE (DIP). ALL WATER MAIN DUCTILE IRON PIPE AND PIPE FITTINGS SHALL BE PAINTED WITH A 4" WIDE CONTINUOUS BLUE LINE THAT RUNS PARALLEL TO THE AXIS OF THE PIPE AND THAT IS LOCATED ALONG THE TOP OF THE PIPE. APPROVED PAINT INDURON, AQUANAUT 5082 ALASKAN BLUE (ONE COAT, 3 MILS DRY FILM THICKNESS APPLIED WITH 1/2" NAP MEDIUM ROLLER).

19. PIPE COLORS. ALL WATER MAIN PIPE, INCLUDING FITTINGS, INSTALLED ON OR AFTER AUGUST 28, 2003, EXCEPT PIPE INSTALLED UNDER A CONSTRUCTION PERMIT FOR WHICH THE DEPARTMENT RECEIVED A COMPLETE APPLICATION BEFORE AUGUST 28, 2003, SHALL BE COLOR CODED OR MARKED USING BLUE AS A PREDOMINANT COLOR TO DIFFERENTIATE DRINKING WATER FROM RECLAIMED OR OTHER WATER. UNDERGROUND PLASTIC PIPE SHALL BE SOLID-WALL BLUE PIPE, SHALL HAVE A CO-EXTRUDED BLUE EXTERNAL SKIN, OR SHALL BE WHITE OR BLACK WITH BLUE STRIPES INCORPORATED INTO, OR APPLIED TO, THE PIPE WALL, AND UNDERGROUND METAL OR CONCRETE PIPE SHALL HAVE BLUE STRIPES APPLIED TO THE PIPE WALL. PIPE STRIPED DURING MANUFACTURING OF THE PIPE SHALL HAVE CONTINUOUS STRIPES THAT RUN PARALLEL TO THE AXIS OF THE PIPE, THAT ARE LOCATED AT NO GREATER THAN 90-DEGREE INTERVALS AROUND THE PIPE, AND THAT WILL REMAIN INTACT DURING AND AFTER INSTALLATION OF THE PIPE. IF TAPE OR PAINT IS USED TO STRIPE PIPE DURING INSTALLATION OF THE PIPE, THE TAPE OR PAINT SHALL BE APPLIED IN A CONTINUOUS LINE THAT RUNS PARALLEL TO THE AXIS OF THE PIPE AND THAT IS LOCATED ALONG THE TOP OF PIPE; FOR PIPES WITH AN INTERNAL DIAMETER OF 24 INCHES OR GREATER, TAPE OR PAINT SHALL BE APPLIED IN CONTINUOUS LINES ALONG EACH SIDE OF THE PIPE AS WELL AS ALONG THE TOP OF THE PIPE. ABOVEGROUND PIPE AT DRINKING WATER TREATMENT PLANTS SHALL BE COLOR CODED AND LABELED IN ACCORDANCE WITH SUBSECTION 62-555.320(10), F.A.C., AND ALL OTHER ABOVEGROUND PIPE SHALL BE PAINTED BLUE OR COLOR CODED OR MARKED LIKE UNDERGROUND PIPE.

DOCUMENTS PREPARED BY

CIVIL DESIGN, INC.
ENGINEERING CONSULTANTS
Civil Design, Inc.
312 9th Street
West Palm Beach, FL 33401
T: 561.659.5760
F: 561.659.5772
www.civil-design.com
Engineering Business No. 9664

CDI PROJECT No. 14413

HARVARD•JOLLY
ARCHITECTURE

FL Lauderdale 954-486-7910
Ft. Myers 239-275-7774
Jacksonville 904-396-3300
Orlando 407-667-7727
Punta Gorda 941-575-0403
St. Petersburg 727-896-4611
Tampa 813-286-8206
West Palm Beach 561-478-4457
AAC000119
www.HarvardJolly.com
WEST PALM BEACH FL

NEW CLASSROOM BUILDING
RIVIERA BEACH MARITIME ACADEMY
RIVIERA BEACH, FLORIDA
CONTRUCTION DOCUEMENTS

Comm. No	214031.00
Date.	09-24-14
Drawn.	,
Revised:	

copyright 2014

GENERAL NOTES

C0.2

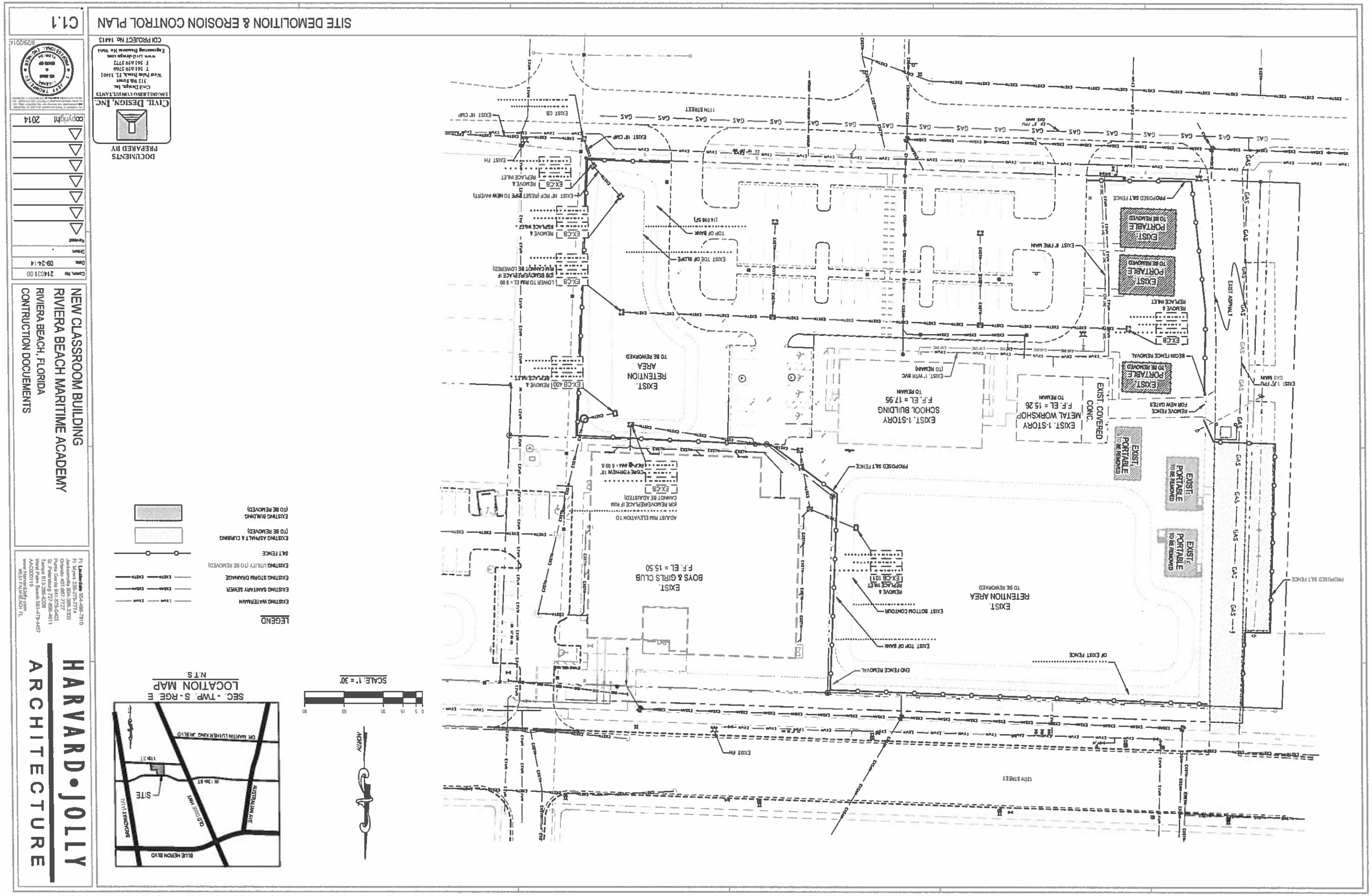

SITE DEMOLITION & EROSION CONTROL PLAN
C1.1
CDI PROJECT No. 14413
DOCUMENTS PREPARED BY
CIVIL DESIGN, INC.
ENGINEERING CONSULTANTS
Civil Design, Inc.
312 9th Street
West Palm Beach, FL 33401
T 561 659 5760
F 561 659 5772
www.civil-design.com
Engineering Business No. 9664
copyright 2014
NEW CLASSROOM BUILDING
RIVIERA BEACH MARITIME ACADEMY
RIVIERA BEACH, FLORIDA
CONTRUCTION DOCUEMENTS
HARVARD•JOLLY
ARCHITECTURE
LEGEND
EXISTING WATERMAIN
EXISTING SANITARY SEWER
EXISTING STORM DRAINAGE
EXISTING UTILITY (TO BE REMOVED)
SILT FENCE
EXISTING ASPHALT & CURBING (TO BE REMOVED)
EXISTING BUILDING (TO BE REMOVED)
SEC. - TWP. S - RGE. E
LOCATION MAP
N.T.S.
SCALE: 1" = 30'
NORTH
EXIST. RETENTION AREA TO BE REWORKED
EXIST. BOYS & GIRLS CLUB F.F. EL = 15.50
EXIST. 1-STORY SCHOOL BUILDING F.F. EL = 17.95 TO REMAIN
EXIST. 1-STORY METAL WORKSHOP F.F. EL = 15.26 TO REMAIN
EXIST. COVERED CONC.
EXIST. PORTABLE TO BE REMOVED
PROPOSED SILT FENCE
END FENCE REMOVAL
13TH STREET
11TH STREET

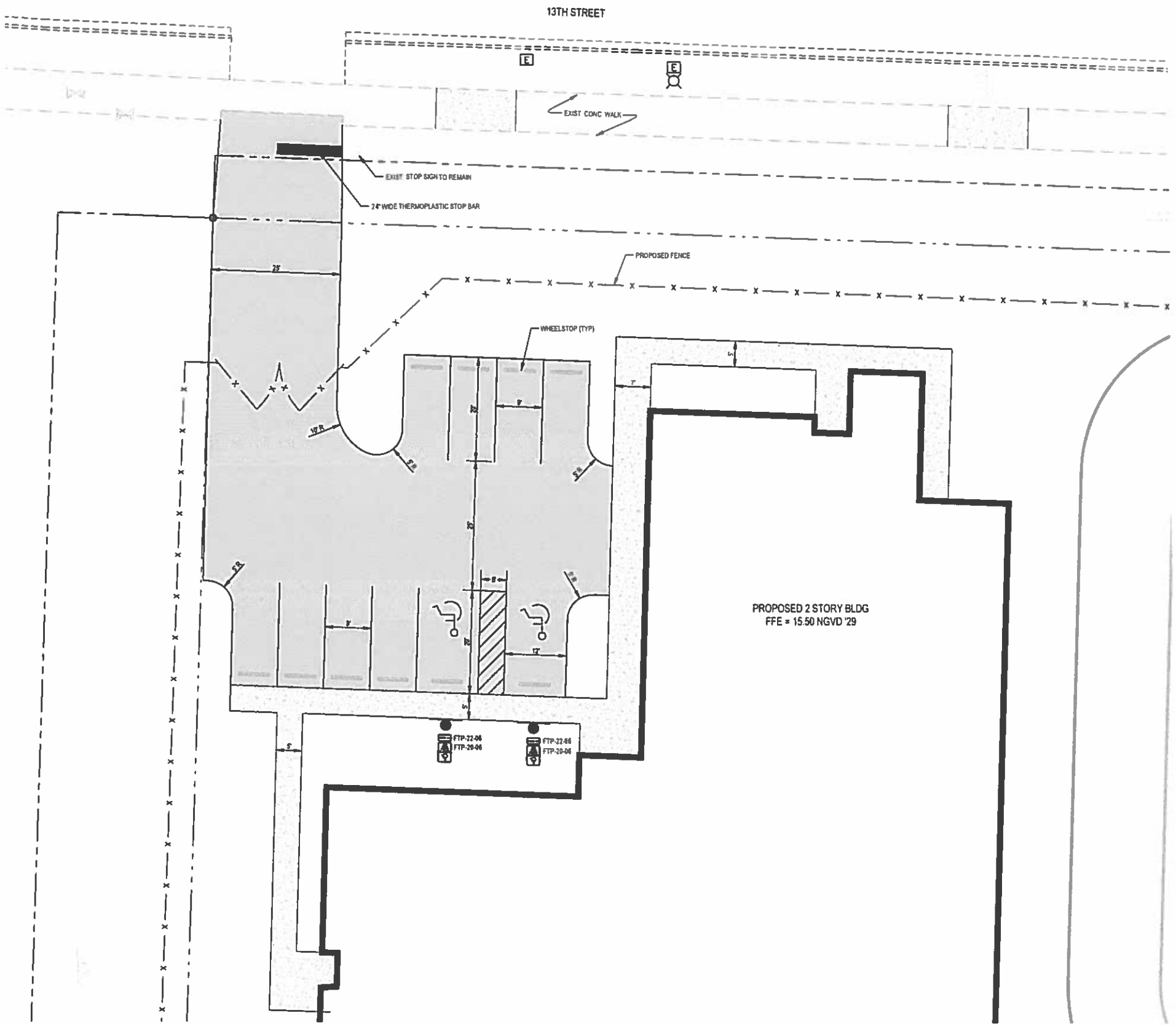

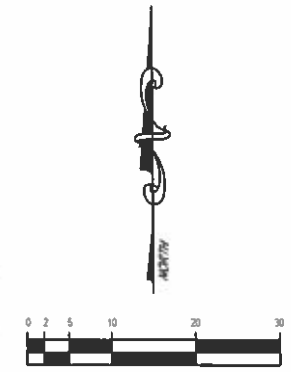

SCALE: 1" = 10'

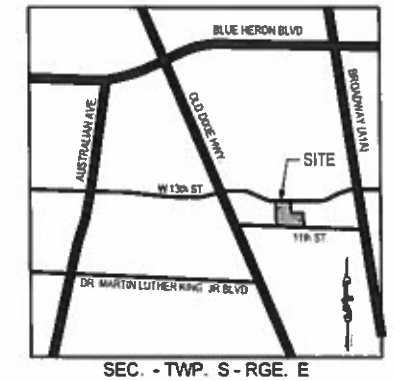

SEC. - TWP. S - RGE. E
LOCATION MAP
N.T.S.

LEGEND

PROPOSED PAVEMENT

PROPOSED CONCRETE

PROPOSED BUILDING

DOCUMENTS PREPARED BY

CIVIL DESIGN, INC.
ENGINEERING CONSULTANTS
Civil Design, Inc.
312 9th Street
West Palm Beach, FL 33401
T 561 659 5760
F 561 659 5772
www.civil-design.com
Engineering Business No. 9664

CDI PROJECT No. 14413

HARVARD•JOLLY
ARCHITECTURE

Ft. Lauderdale 954-486-7910
Ft. Myers 239-275-7774
Jacksonville 904-398-3300
Orlando 407-667-7727
Punta Gorda 941-575-0403
St. Petersburg 727-896-4611
Tampa 813-286-8206
West Palm Beach 561-478-4457
AAC000119
www.Harvard.jolly.com
WEST PALM BEACH FL

NEW CLASSROOM BUILDING
RIVIERA BEACH MARITIME ACADEMY
RIVIERA BEACH, FLORIDA
CONTRUCTION DOCUEMENTS

Comm. No.	214031.00
Date:	09-24-14
Drawn:	
Revised:	

copyright 2014

SIGNING, STRIPING, & GEOMETRIC PLAN

C2.1

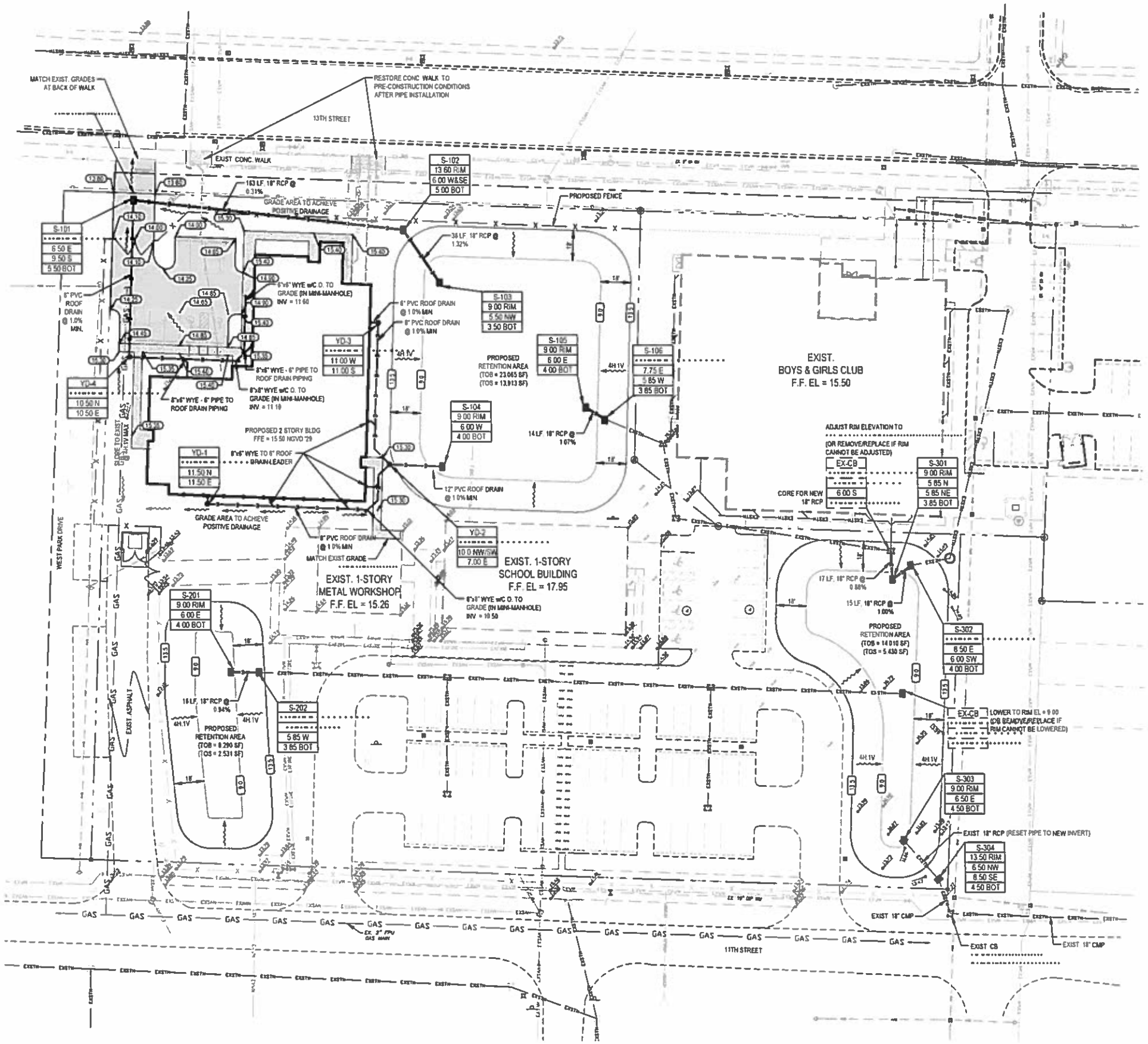

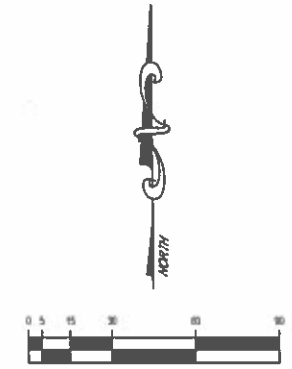

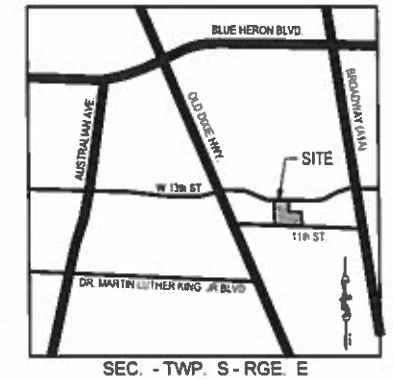

SEC. - TWP. S - RGE. E
LOCATION MAP
N.T.S.

LEGEND

- EXISTING WATERMAIN
- EXISTING SANITARY SEWER
- EXISTING STORM DRAINAGE
- STRUCTURE NUMBER — S-100
- RIM ELEVATION — 00.00 RIM
- INVERT — 0.00
- STRUCTURE BOTTOM — 0.00 BOT
- PROPOSED STORM DRAINAGE LINE W/ STORM STRUCTURE
- PROPOSED SANITARY SEWER SERVICE LINE
- PROPOSED WATER SERVICE LINE
- PROPOSED PAVEMENT
- PROPOSED BUILDING
- PROPOSED CONCRETE
- EXISTING ELEVATIONS
- PROPOSED ELEVATIONS — 0.00

NOTES:
1. STRUCTURES BASED ON USF PRECAST CONTRACTOR TO FIELD VERIFY
2. YD = YARD DRAIN (ADS DRAIN BASIN)

DRAINAGE STRUCTURE CHART

STRUCT NUMBER	STRUCT TYPE	GRATE TYPE
S-101	------	U.S.F. 4155-6209
S-102	------	U.S.F. 4155-6209
S-103	------	U.S.F. 4155-6209
S-104	------	U.S.F. 4155-6209
S-105	------	U.S.F. 4155-6209

(W/ SEATED GRATE)

DRAINAGE STRUCTURE CHART

STRUCT NUMBER	STRUCT TYPE	GRATE TYPE
S-201	------	U.S.F. 4155-6209
S-202	------	U.S.F. 4155-6209

DRAINAGE STRUCTURE CHART

STRUCT NUMBER	STRUCT TYPE	GRATE TYPE
S-301	------	U.S.F. 4155-6209
S-302	------	U.S.F. 4155-6209
S-303	------	U.S.F. 4155-6209
S-304	------	U.S.F. 4155-6209
S-305	------	U.S.F. 4155-6209

DOCUMENTS PREPARED BY

CIVIL DESIGN, INC.
ENGINEERING CONSULTANTS
Civil Design, Inc.
312 9th Street
West Palm Beach, FL 33401
T 561.659.5760
F 561.659.5772
www.civil-design.com
Engineering Business No. 9664

CDI PROJECT No. 14413

HARVARD • JOLLY
ARCHITECTURE
Ft. Lauderdale 954-486-7910
Ft. Myers 239-275-7774
Jacksonville 904-399-3300
Orlando 407-677-7777
Punta Gorda 941-575-0403
St. Petersburg 727-898-4611
Tampa 813-286-6200
West Palm Beach 561-478-4457
AA0003119
www.harvardjolly.com
WEST PALM BEACH FL

NEW CLASSROOM BUILDING
RIVIERA BEACH MARITIME ACADEMY
RIVIERA BEACH, FLORIDA
CONTRUCTION DOCUEMENTS

Comm. No 214031.00
Date. 09-24-14
Drawn.
Revised:

copyright 2014

9/29/2014

PAVING, GRADING, & DRAINAGE PLAN

C3.1

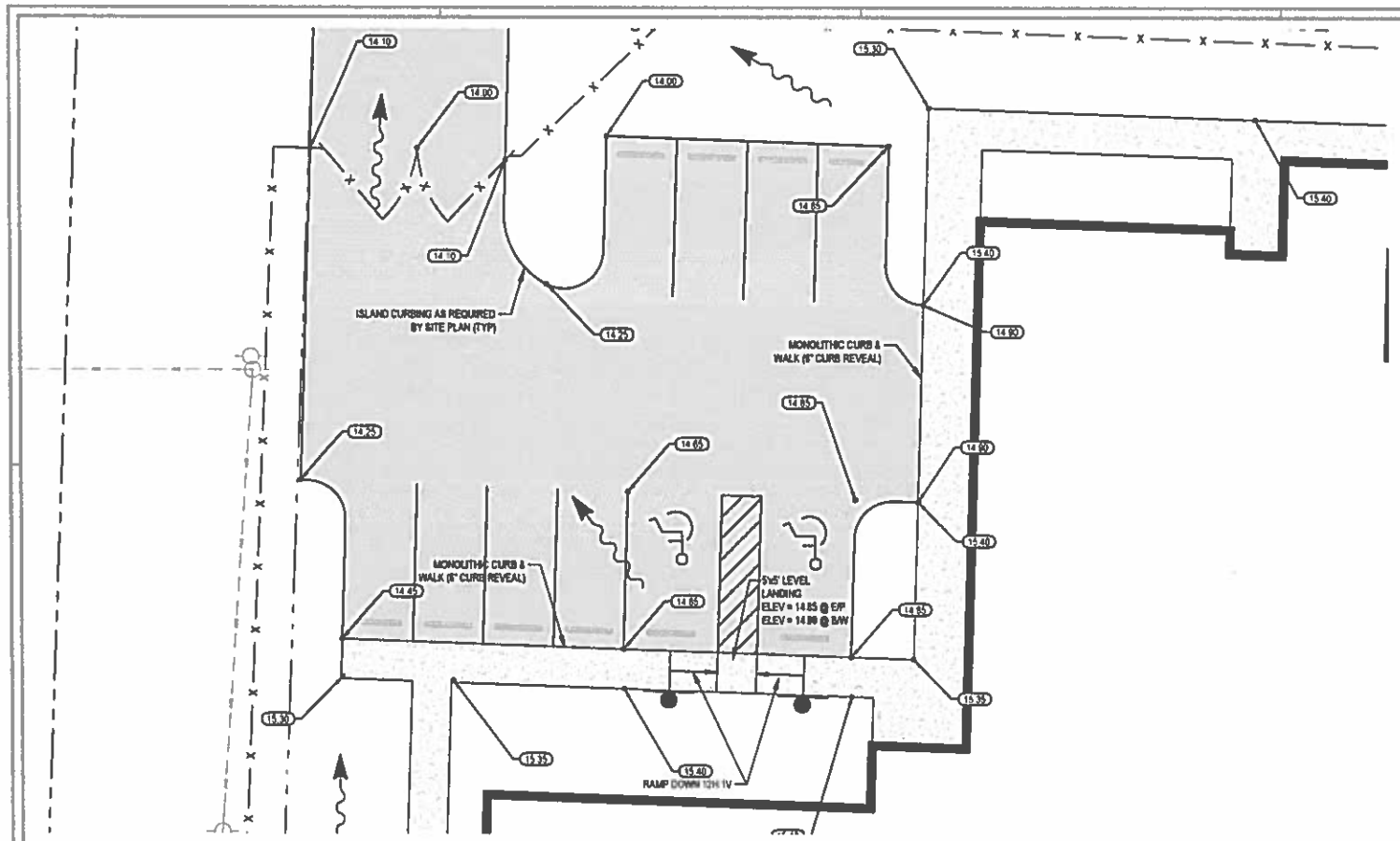

ENLARGED DETAIL

SCALE: 1" = 10'

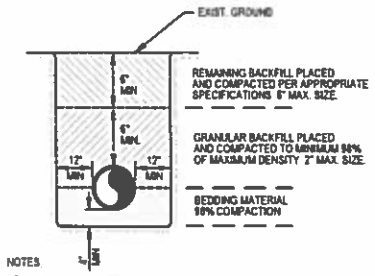

NOTES

1. BEDDING SHALL CONSIST OF IN-SITU GRANULAR MATERIAL OR WASHED AND GRADED LIMEROCK 3/8" - 7/8" SIZING UNSUITABLE IN-SITU MATERIALS SUCH AS MUCK, DEBRIS AND LARGER ROCK SHALL BE REMOVED
2. THE PIPE SHALL BE FULLY SUPPORTED FOR ITS ENTIRE LENGTH WITH APPROPRIATE COMPACTION UNDER THE PIPE HAUNCHES.
3. THE PIPE SHALL BE PLACED IN A DRY TRENCH
4. BACKFILL SHALL BE FREE OF UNSUITABLE MATERIALS SUCH AS LARGER ROCK, MUCK AND DEBRIS
5. SEE GENERAL NOTES FOR PIPE BACKFILL BENEATH PROPOSED PAVEMENT

TRENCH DETAIL

N.T.S.

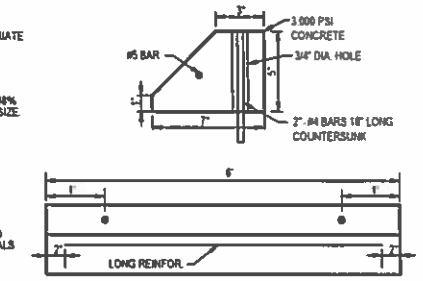

CONCRETE WHEEL STOP DETAIL

N.T.S.

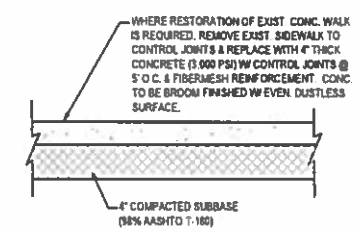

CONCRETE SIDEWALK RESTORATION DETAIL

N.T.S.

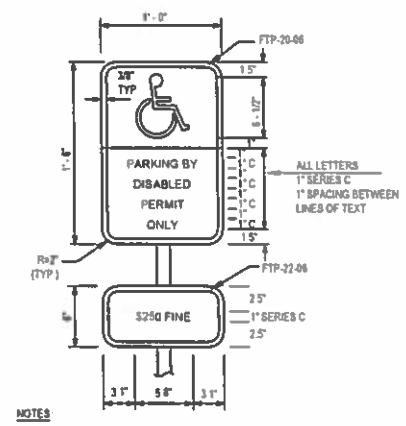

NOTES

SIGN FTP-20-06

1. ALL LETTERS ARE 1" SERIES "C"
2. TOP PORTION OF SIGN SHALL HAVE A REFLECTORIZED BLUE BACKGROUND WITH WHITE REFLECTORIZED LEGEND & BORDER.
3. BOTTOM PORTION OF SIGN SHALL HAVE A REFLECTORIZED WHITE BACKGROUND WITH BLACK OPAQUE LEGEND & BORDER.

SIGN FTP-22-06

1. ALL LETTERS ARE 1" SERIES "C"
2. BACKGROUND WHITE, LEGEND AND BORDER BLACK.

HANDICAP SIGN DETAILS

REFERENCE FDOT INDEX 17355

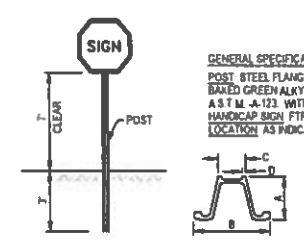

GENERAL SPECIFICATIONS

POST: STEEL FLANGED CHANNEL POST WITH BAKED GREEN ALKYD OR GALVANIZED FINISH PER A.S.T.M. A-123. WITHOUT ANCHOR PLATES
HANDICAP SIGN: FTP-20-06 & 22-06
LOCATION: AS INDICATED ON THE PLANS

DIMENSION	TOLERANCE	2.00	3.00
'A'	+ - 3/32"	1 - 15/32"	1 - 7/8"
'B'	+ - 1/8"	3 - 1/16"	3 - 1/2"
'C'	+ - 1/16"	1 - 9/32"	1 - 5/16"
'D'	+ - 1/32"	3/16"	7/32"

CHANNEL POST

TYPICAL SIGN & POST DETAILS

N.T.S.

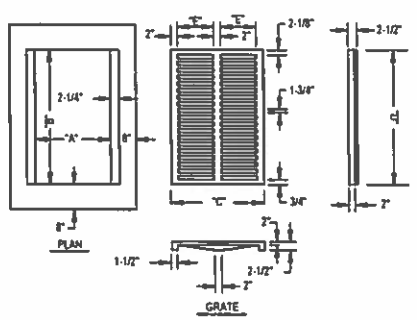

TYPE INLET	"A"	"B"	"C"	"D"	"E"	MAX. SIZE R.C.P.
"C"	2'-8"	3'-1"	2'-4"	3'-0"	11"	18"
"E"	3'-8"	4'-8"	3'-4"	4'-4"	1'-5"	30"
"E MOD"	3'-8"	4'-8"	3'-4"	4'-4"	1'-5"	48"

GENERAL NOTES

BEVELED EDGES	ALL EXPOSED CORNERS AND EDGES TO BE CHAMFERED 3/4"
FOUNDATION MATERIAL	WHERE MATERIAL UNSATISFACTORY FOR FOUNDATION IS ENCOUNTERED AT FLOW LINE OMIT FLOOR AND CARRY WALLS DOWN TO SATISFACTORY FOUNDATION BACKFILL TO FLOW LINE WITH CLEAN SAND
GRATES	CAST IRON GRATES IN ACCORDANCE WITH FLA D.O.T. SPECS
* INLET TYPES	INLETS ARE TO BE AS SHOWN HEREON. TYPE "E MOD"
	48" DIA. INLETS RECEIVING R.C.P. LARGER THAN 48" DIA. SHALL BE IN ACCORDANCE WITH FLA. D.O.T. STANDARDS.
MATERIAL	INLET WALLS AND FOOTING MAY EITHER POURED-IN-PLACE 2500 LB. CONC., OR PRECAST CLASS "A" 3000 LB. CONC.
	ALL INLET CONSTRUCTION IS IN ACCORDANCE WITH THE CURRENT F.D.O.T. STANDARDS INDEX NO. 201 & 232
	ALL INLET GRATES TO BE SECURED WITH A LOCKING CHAIN PER F.D.O.T. INDEX 201

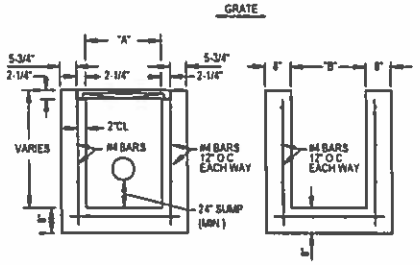

INLET DETAIL

N.T.S.

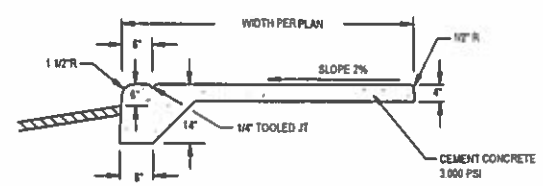

MONOLITHIC CURB AND SIDEWALK DETAIL

TO BE USED WHERE SIDEWALK ABUTS PAVEMENT UNLESS OTHERWISE NOTED ON PLANS.

N.T.S.

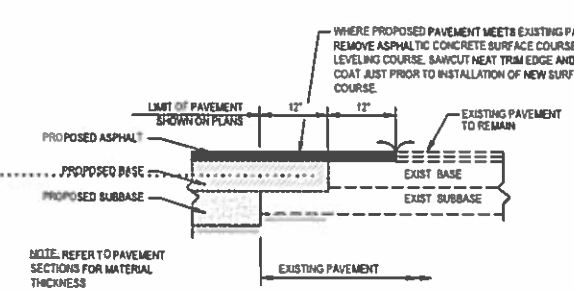

PAVEMENT MATCHING DETAIL

N.T.S.

PAVING & CONCRETE SPECIFICATIONS				
TYPE	WEARING SURFACE	BASE	SUB-GRADE	CONCRETE (ONSITE & OFFSITE)
ONSITE ASPHALT PAVEMENT	1 3/4" THICK, TYPE S-III A.C.S.C. - TWO LIFTS (FIRST LIFT TO BE 3/4" AND 2ND LIFT TO BE 1")	8" THICK, BASEROCK COMPACTED IN TWO EQUAL LIFTS TO 98% MAXIMUM DRY DENSITY A.A.S.H.T.O. T-180 (LBR 100)	12" THICK, COMPACTED TO 98% MAXIMUM DRY DENSITY A.A.S.H.T.O. T-180	4" THICK CONCRETE (3,000 PSI) TO BE PLACED AT TIME OF CONSTRUCTION WITH 4" COMPACTED BASE (SIDEWALKS SHALL BE 6" THICK AT DRIVEWAYS). SIDEWALKS TO BE BROOM FINISHED WITH EVEN, DUSTLESS SURFACE. CONTROL JOINTS TO BE SPACED 5' ON CENTER. EXPANSION JOINTS REQUIRED EVERY 120 FEET, AT EACH CHANGE OF DIRECTION, AND WHEN SIDEWALK ABUTS BUILDING
ONSITE - CONCRETE ALTERNATE	5" THICK, 3,500 PSI CONCRETE w/JOINTS EVERY 12' MAX. SUBMIT JOINT SHOP DRAWING FOR REVIEW	N/A	12" THICK, COMPACTED TO 98% MAXIMUM DRY DENSITY A.A.S.H.T.O. T-180	

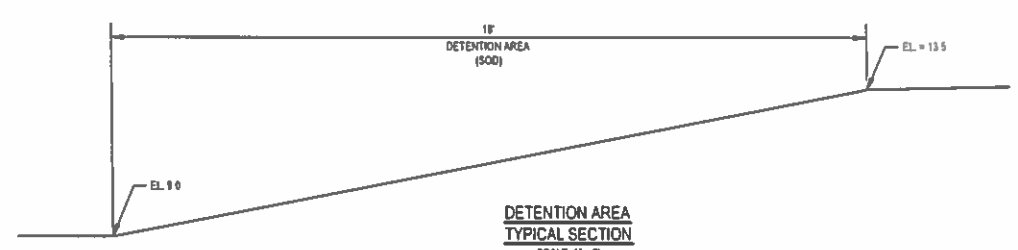

DETENTION AREA TYPICAL SECTION

SCALE: 1" = 2'

DOCUMENTS PREPARED BY

CIVIL DESIGN, INC.
ENGINEERING CONSULTANTS
Civil Design, Inc.
312 9th Street
West Palm Beach, FL 33401
T: 561.659.5760
F: 561.659.5772
www.civil-design.com
Engineering Business No. 9864

CDI PROJECT No. 14413

HARVARD•JOLLY ARCHITECTURE

Ft. Lauderdale 954-495-7910
Ft. Myers 239-275-7774
Jacksonville 904-398-3300
Orlando 407-277-7777
Punta Gorda 941-575-0403
St. Petersburg 727-895-4511
Tampa 813-258-8200
West Palm Beach 561-478-4457
AA0003119
www.HarvardJolly.com
RESTAURANT/CAFE FL

NEW CLASSROOM BUILDING
RIVIERA BEACH MARITIME ACADEMY
RIVIERA BEACH, FLORIDA
CONTRUCTION DOCUEMENTS

Comm. No: 214031.00
Date: 09-24-14
Drawn: -
Revised:

copyright 2014

JEFF TROMBETTA LICENSED STATE OF FLORIDA PROFESSIONAL ENGINEER 9/29/2014

PAVING, GRADING, & DRAINAGE DETAILS

C4.1

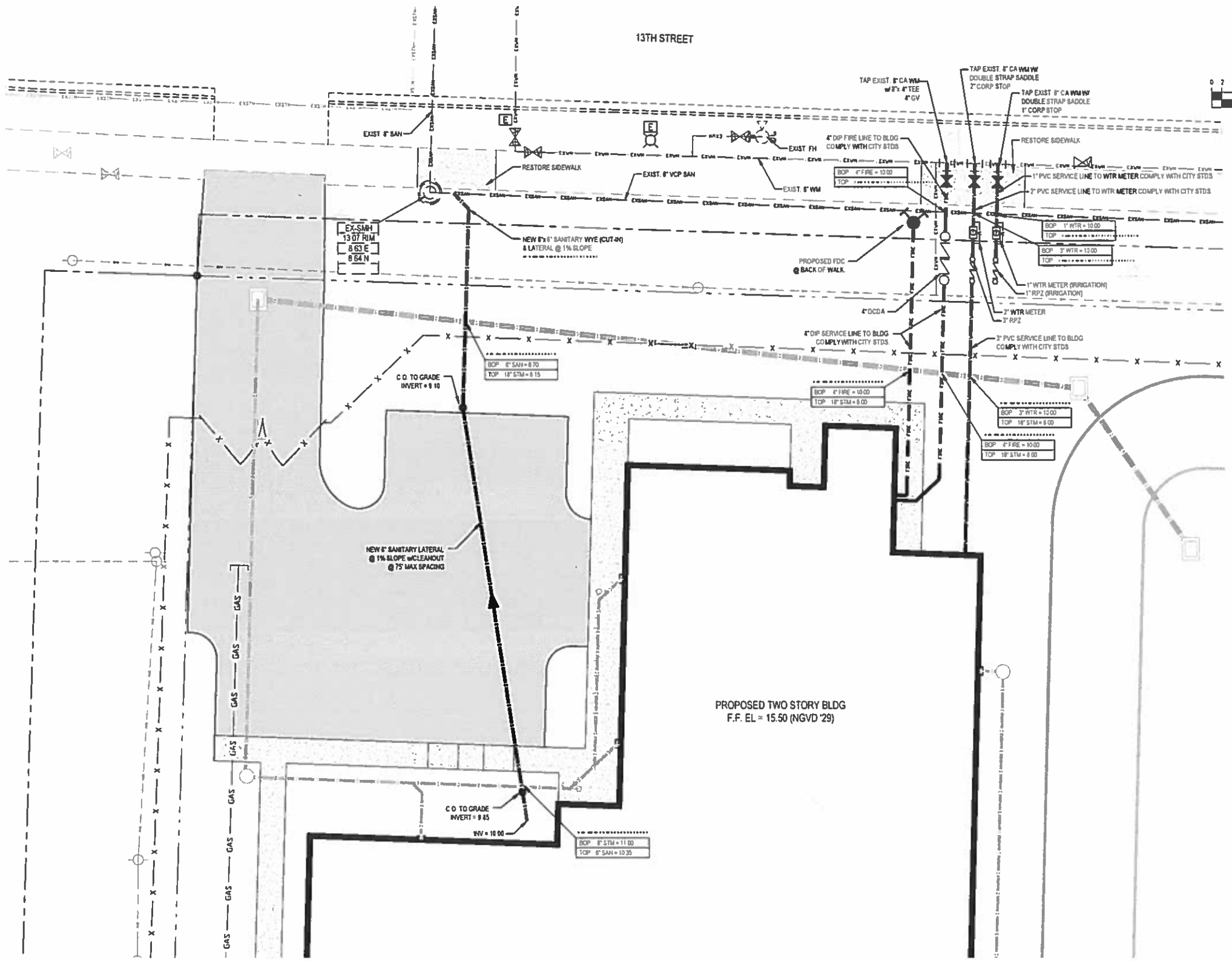

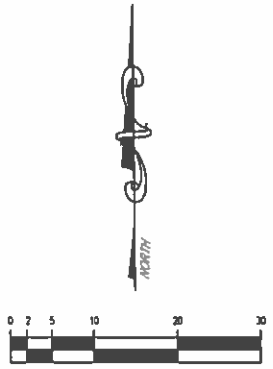

SCALE: 1" = 10'

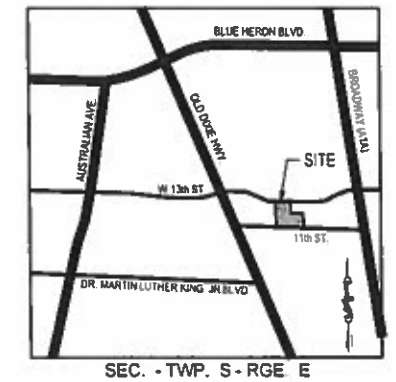

SEC. - TWP. S - RGE E
LOCATION MAP
N.T.S.

LEGEND

EXISTING WATERMAIN	EXWM
EXISTING SANITARY SEWER	EXSAN
EXISTING STORM DRAINAGE	EXSTM
PROPOSED STORM DRAINAGE LINE W/ STORM STRUCTURE	
PROPOSED SANITARY SEWER SERVICE LINE	S
PROPOSED WATER SERVICE LINE	W
PROPOSED FIRE	FIRE
PROPOSED PAVEMENT	
PROPOSED BUILDING	
PROPOSED CONCRETE	

DOCUMENTS PREPARED BY

CIVIL DESIGN, INC.
ENGINEERING CONSULTANTS
Civil Design, Inc.
312 9th Street
West Palm Beach, FL 33401
T: 561.659.5760
F: 561.659.5772
www.civil-design.com
Engineering Business No. 9664

CDI PROJECT No. 14413

POTABLE WATER & SANITARY SEWER PLAN

HARVARD • JOLLY
ARCHITECTURE

Ft. Lauderdale 954-486-7910
Ft. Myers 239-275-7774
Jacksonville 904-396-3300
Orlando 407-667-7727
Punta Gorda 941-575-0403
St. Petersburg 727-895-4611
Tampa 813-286-6206
West Palm Beach 561-478-4457
AAC000119
www.HarvardJolly.com
WEST PALM BEACH, FL

NEW CLASSROOM BUILDING
RIVIERA BEACH MARITIME ACADEMY
RIVIERA BEACH, FLORIDA
CONTRUCTION DOCUEMENTS

Comm. No	214031.00
Date	09-24-14
Drawn	
Revised	

copyright 2014

JEFF TROMMETER LICENSE NO. 49-6 STATE OF FLORIDA PROFESSIONAL ENGINEER
9/29/2014

C5.1

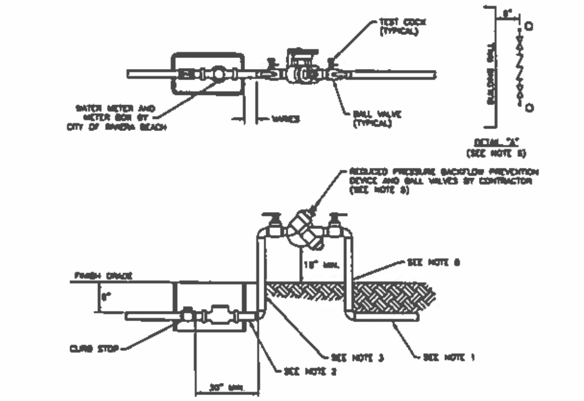

NOTES:
1. TYPE "K" COPPER TUBING (SOFT DRAWN) OR POLYETHYLENE TUBING SDR 9 COPPER TUBE SIZE.
2. IF THIS DISTANCE IS LESS THAN 3 FEET ONLY COPPER TUBING SHALL BE PERMITTED.
3. 3/4"-2" BOTH RISERS SHALL BE TYPE "K" COPPER TUBING (HARD DRAWN) WITH COPPER/BRASS SOLDER FITTINGS AND ADAPTORS. ONLY LEAD FREE SOLDER AND FLUX SHALL BE PERMITTED.
4. BOTH 1 1/2" AND 2" ANGLE METER STOPS SHALL BE EQUIPPED WITH LOCKING CAPS AND METER FLANGES.
5. ALL BACKFLOW PREVENTION DEVICES ASSEMBLY MUST BE USC APPROVED.
6. WHEN THE DEVICE IS INSTALLED PARALLEL TO A BUILDING WALL THERE SHALL BE A MIN. OF 6" BETWEEN THE EDGE OF THE DEVICE AND THE BUILDING WALL.
7. 2 1/2 "-10" THE RPZ BACKFLOW PREVENTION ASSEMBLY MUST BE INSTALLED DOWNSTREAM OF THE WATER SERVICE METER 18"-24" ABOVE FINISHED GRADE ON NON-GALVANIZED METAL PIPE. WORK DONE ON THIS DEVICE MUST BE PERFORMED BY A CERTIFIED BACKFLOW TECHNICIAN AND TEST REPORTS MUST BE SUBMITTED TO THE CITY OF RIVIERA BEACH - UTILITY DISTRICT.

RPZ BACKFLOW PREVENTION DEVICE

05/27/05

Water & Sewer Details

City of Riviera Beach Utility District

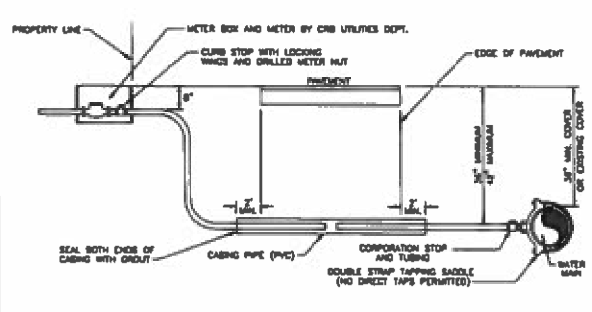

NOTES:
1. CASINGS SHALL BE REQUIRED FOR ALL LONG SIDE SERVICES.
2. SUCCESSIVE TAPS INTO THE WATER MAIN SHALL BE SPACED A MINIMUM OF 18" OFFSET.
3. WHERE NO SIDEWALK EXISTS, METER BOXES SHALL BE SET TO CONFORM TO FINISH GRADE.
4. COPPER TUBING SHALL BE TYPE "K" WITH COMPRESSION FITTINGS.
5. USE EMS MARKER #1252 COLOR BLUE DIRECTLY OVER THE CORPORATION STOP.
6. ALL SERVICE LINES SHALL BE EQUIPED WITH A CORPORATION STOP AT THE MAIN AND A CURB STOP (LOCKING CONNECTION TYPE) AT THE METER.
7. THE COPPER SERVICE LINE SHALL BE CONTINOUS FROM CORPORATION STOP TO CURB STOP WITH NO FITTINGS IN BETWEEN.
8. TAPPING SADDLES AND CORPORATION STOPS SHALL HAVE AWWA INLET THREADS.
9. ALL EXPOSED FITTINGS TO BE COATED WITH COLA TAR EPOXY.
10. GALVANIZED CASING REQUIRED FOR ANY INSTALLATION REQUIRING A JACK AND BORE, SCH. 40 PVC MAY BE USED FOR AN OPEN CUT INSTALLATION WITH THE APPROVAL OF THE CRB UTILITIES DEPT. CASING SHOULD EXTEND TWO (2) FEET BEYOND EDGE OF PAVEMENT AND SIZED AS FOLLOWS:
A.) 1" SERVICE USE 2" CASING
B.) 1 1/2" SERVICE USE 3" CASING
C.) 2" SERVICE USE 4" CASING

3/4" – 2" TYPICAL WATER SERVICE INSTALLATION

N.T.S.

05/27/05

Water & Sewer Details

City of Riviera Beach Utility District

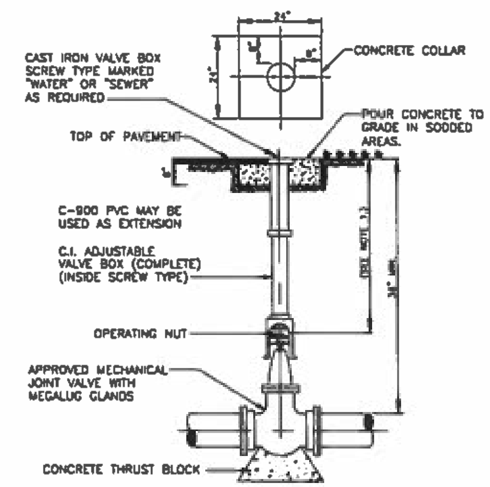

NOTES:
1. WHEN OPERATING NUT IS DEEPER THAN 36" AN EXTENSION WILL BE REQUIRED TO BRING OPERATING NUT 24"-30" BELOW FINISHED GRADE. EXTENSION BOLTS & NUTS ARE TO BE STAINLESS STEEL. A STAINLESS STEEL CENTERING PLATE, WELDED TO THE EXTENSION, IS ALSO REQUIRED.
2. VALVE BOXES SHALL HAVE LOCKING COVERS IN HIGH TRAFFIC ROADWAY AREAS.

TYPICAL GATE VALVE SETTINGS

N.T.S.

05/31/05

Water & Sewer Details

City of Riviera Beach Utility District

TYPICAL LOCATIONS WHICH REQUIRE CONCRETE REACTION (THRUST) BLOCKS, FOR PRESSURE MAINS 4"SIZE AND GREATER CONCRETE SHALL HAVE 2500 PSI MINIMUM STRENGTH AT 28 DAYS AND BEAR AGAINST UNDISTURBED STABLE SOILS. AREA OF CONTACT SHALL BE GOVERNED BY PIPE SIZE, MAX. PRESSURE IN PIPE AND BEARING CAPACITY OF SOIL.

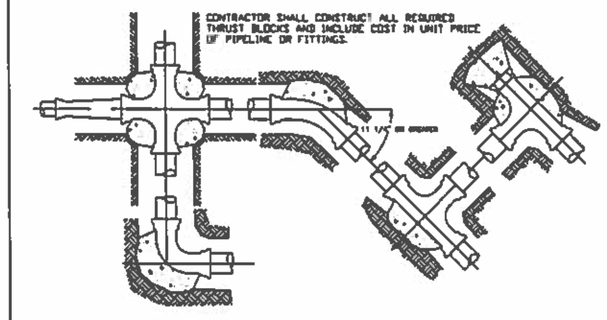

PIPE	THRUST BLOCK AREA REQ'D	PIPE	THRUST BLOCK AREA REQ'D	REMARKS
4"	2.0 SQ. FT.	18"	30.0 SQ. FT.	VALUES ARE FOR 90° BEND, BASED ON 2000 PSF SAFE BEARING LOAD AND PIPE PRESSURE OF 150 PSI PLUS 50% SAFETY FACTOR. FOR OTHER SOILS & PRESSURES THE AREA REQUIRED IS IN DIRECT PROPORTION
6"	4.0 SQ. FT.	20"	37.0 SQ. FT.	
8"	6.6 SQ. FT.	24"	53.0 SQ. FT.	
10"	10.0 SQ. FT.	27"	80.0 SQ. FT.	
12"	14.0 SQ. FT.	30"	98.0 SQ. FT.	
14"	18.6 SQ. FT.	36"	127.0 SQ. FT.	
16"	24.0 SQ. FT.			

NOTE: FOR OTHER FITTINGS USE FOLLOWING FACTORS

TEE 100%
45° BEND 76%
22 1/2° BEND 39%
11 1/4° BEND 20%
DEAD END 100%

CONCRETE THRUST BLOCKS

N.T.S.

05/27/05

Water & Sewer Details

City of Riviera Beach Utility District

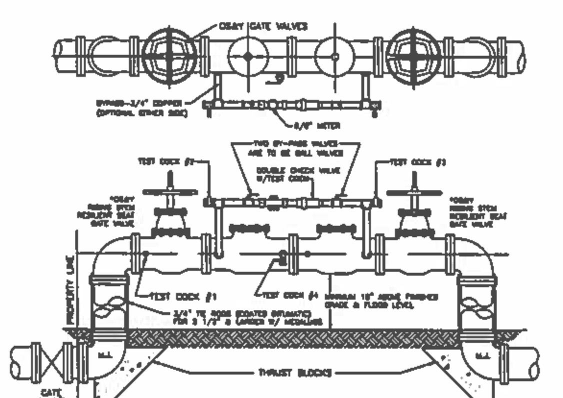

NOTES:
1. ABOVE GROUND INSTALLATION OF 3" & ABOVE REQUIRE RISING STEM O.S. & Y. RESILIENT SEAT GATE VALVES WITH TEST COCKS.
2. INSTALLATION AND CERTIFICATION REQUIRED BY A CERTIFIED BACKFLOW TECHNICIAN PRIOR TO ACCEPTANCE.
3. AN RPZ BACKFLOW PREVENTION ASSEMBLY MUST BE INSTALLED DOWNSTREAM OF THE DOMESTIC AND IRRIGATION METER, 18" – 24" ABOVE FINISHED GRADE ON NON-GALVANIZED METALLIC PIPE. WORK DONE ON THIS DEVICE IS TO BE PERFORMED BY A CERTIFIED BACKFLOW TECHNICIAN AND TEST REPORTS MUST BE SUBMITTED TO THE CITY OF RIVIERA BEACH – UTILITY DISTRICT.

DOUBLE DETECTOR CHECK ASSEMBLY & METER INSTALLATION SIZES:3",4",6",8",10"

N.T.S.

05/27/05

Water & Sewer Details

City of Riviera Beach Utility District

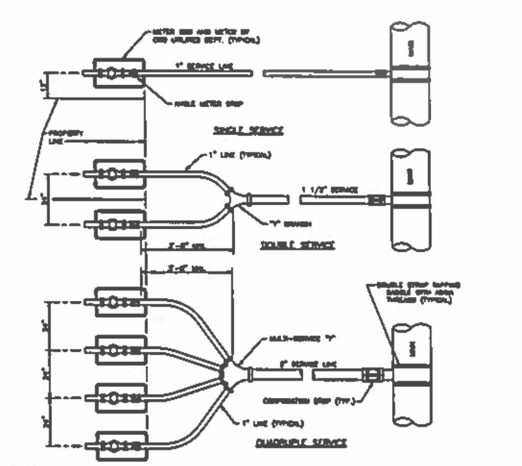

NOTES:
1. AUTHORIZED SERVICE LINE MATERIAL:
A) TYPE "K" COPPER TUBING WITH COMPRESSION FITTINGS.
B) POLYETHYLENE TUBING SDR 9, COPPER TUBE SIZE.
2. ANGLE METER STOP SHALL BE 1" MINIMUM.
3. 1" ANGLE METER STOPS WITH 3/4" VALVES SHALL NOT BE PERMITTED.
4. MULTIPLE SERVICE/METER INSTALLATIONS OF MORE THAN 4 METERS PER SERVICE AND SERVICE LINES LARGER THAN 2" DIAMETER SHALL BE HANDLED ON AN INDIVIDUAL BASIS.
5. ANGLE METER STOPS 1 1/2" AND 2" IN SIZE SHALL BE PROVIDED WITH BOTH A LOCKING CAP AND METER FLANGE.
6. NO FITTINGS BETWEEN CORP STOP AND ANGLE METER STOP ALLOWED WHEN USING POLYETHYLENE TUBING.

TYPICAL WATER SERVICES

N.T.S

Water & Sewer Details

City of Riviera Beach Utility District

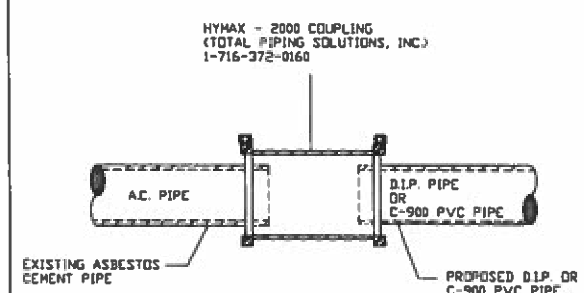

PIPE TRANSITION DETAIL

5/19/05 COUPLING

Water & Sewer Details

City of Riviera Beach Utilities Department

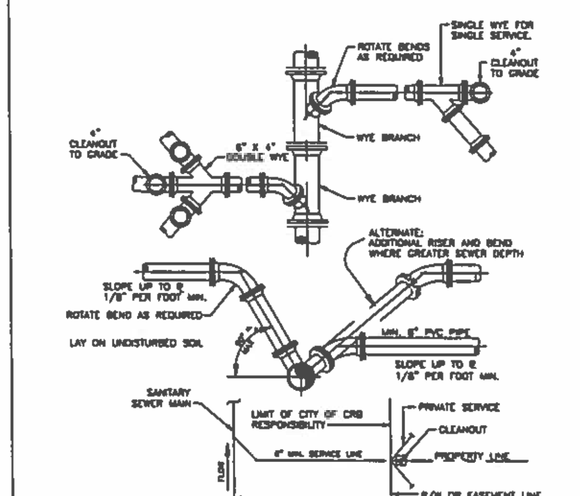

NOTES:
1. SERVICE LATERALS SHALL TERMINATE AT PROPERTY LINE AT A DEPTH OF 3 FEET.
2. CLEANOUT CONNECTION TO BE EXTENDED 3 FEET ABOVE GRADE PRIOR TO WATER METER INSTALLATION.
3. CLEANOUTS ARE TO BE SET TO GRADE PRIOR TO WATER METER ACTIVATION.
4. NO 90° BENDS SHALL BE PERMITTED FOR SEWER SERVICE AND CLEANOUT INSTALLATION.

TYPICAL LATERAL CONNECTIONS

N.T.S.

5/27/05

Water & Sewer Details

City of Riviera Beach Utility District

DOCUMENTS PREPARED BY

CIVIL DESIGN, INC.
ENGINEERING CONSULTANTS
Civil Design, Inc.
312 9th Street
West Palm Beach, FL 33401
T: 561 659 5760
F: 561 659 5772
www.civildesign.com
Engineering Business No. 9664
CDI PROJECT No. 14413

POTABLE WATER & SANITARY SEWER STANDARD DETAILS

C6.1

HARVARD • JOLLY
ARCHITECTURE

Ft. Lauderdale 954-486-7910
Ft. Myers 239-275-7774
Jacksonville 904-396-3300
Orlando 407-667-7727
Punta Gorda 941-575-0403
St. Petersburg 727-896-4611
Tampa 813-286-8206
West Palm Beach 561-478-4457
AAC000119
www.HarvardJolly.com
WEST PALM BEACH FL

NEW CLASSROOM BUILDING
RIVIERA BEACH MARITIME ACADEMY
RIVIERA BEACH, FLORIDA
CONTRUCTION DOCUEMENTS

Comm. No. 214031.00
Date: 09-24-14
Drawn:
Revised:

copyright 2014

ELECTRICAL NOTES

1. THE CONTRACT DOCUMENTS CONSIST OF DRAWINGS, SPECIFICATIONS AND DESIGN INFORMATION PREPARED BY MULTIPLE DISCIPLINES AND MUST BE USED AS A WHOLE AND IN COORDINATION WITH EACH OTHER. THE CONTRACTOR SHALL NOTIFY THE ENGINEER OF ANY APPARENT DISCREPANCIES OR OMISSION OF INFORMATION NOT SHOWN ON THE ELECTRICAL DRAWINGS. SHOP DRAWINGS SHALL BE PROVIDED WHERE NECESSARY FOR COORDINATION. THE CONTRACTOR IS RESPONSIBLE FOR CORRECTING ERRORS RESULTING FROM LACK OF COORDINATION OF DOCUMENTS.
2. REFER TO THE ARCHITECTURAL DOCUMENTS FOR ALL APPLICABLE CODES. THE WORK SHALL BE IN ACCORDANCE WITH THE 2008 NATIONAL ELECTRICAL CODE (NFPA 70), THE 2010 FLORIDA BUILDING CODE, 2007 NFPA 72, NFPA-101 2009 FLORIDA SPECIFIC EDITION, FAC. AND ANY OTHER LOCAL JURISDICTIONAL REQUIREMENTS. IN ADDITION, ANY BASE BUILDING OR TENANT GENERAL CONDITIONS SHALL GOVERN ACCEPTABLE MATERIALS AND WORK.
3. THE CONTRACTOR SHALL BRING ANY CONFLICTS OR DISCREPANCIES TO THE ATTENTION OF THE ENGINEER IN WRITING PRIOR TO PROCEEDING WITH WORK.
4. THE CONTRACTOR SHALL FIELD VISIT THE SITE PRIOR TO BID TO FAMILIARIZE HIMSELF WITH THE SCOPE OF WORK.
5. ALL WORK SHALL BE DONE IN A FIRST CLASS WORKMANLIKE MANNER BY A LICENSED ELECTRICAL CONTRACTOR. THE CONTRACTOR SHALL BE RESPONSIBLE FOR MAINTAINING A SAFE, CLEANLY, AND UNDISRUPTIVE JOB SITE THAT DOES NOT IMPEDE EGRESS PATHS OR OTHER TENANTS. DISRUPTIONS TO POWER AFFECTING OTHER TENANTS OR AREAS OUTSIDE THE SCOPE OF WORK SHALL BE COORDINATED WITH THE OWNER. THE CONTRACTOR SHALL BE RESPONSIBLE FOR ALL CUTTING AND PATCHING OF HIS WORK. WHEN THE WORK IS COMPLETE, ALL ELECTRICAL DEVICES SHALL BE VACUUMED CLEAN. THE FINAL PRODUCT SHALL BE A FULLY FUNCTIONAL SYSTEM MEETING THE INTENT OF THE DRAWINGS/DOCUMENTS. WORKMANSHIP AND ALL MATERIALS AND EQUIPMENT SHALL BE GUARANTEED FOR A MINIMUM OF ONE YEAR IN WRITING COMMENCING UPON ACCEPTANCE OF INSTALLATION BY OWNER.
6. WITHIN 30 DAYS AFTER THE DATE OF THE SYSTEM ACCEPTANCE, RECORD DRAWINGS OF THE ACTUAL INSTALLATION SHALL BE PROVIDED TO THE BUILDING OWNER, INCLUDING A SINGLE-LINE DIAGRAM OF THE BUILDING ELECTRICAL DISTRIBUTION SYSTEM AND FLOOR PLANS INDICATING LOCATION AND AREA SERVED FOR ALL DISTRIBUTION. ADDITIONALLY, AN OPERATING MANUAL AND MAINTENANCE MANUAL SHALL BE PROVIDED TO THE BUILDING OWNER INCLUDING THE FOLLOWING: SUBMITTAL DATA STATING EQUIPMENT RATING AND SELECTED OPTIONS FOR EACH PIECE OF EQUIPMENT REQUIRING MAINTENANCE, OPERATION MANUALS AND MAINTENANCE MANUALS FOR EACH PIECE OF EQUIPMENT REQUIRING MAINTENANCE INCLUDING CLEARLY IDENTIFIED ROUTINE MAINTENANCE ACTIONS, AND NAMES AND ADDRESSES OF AT LEAST ONE QUALIFIED SERVICE AGENCY.
7. UNLESS PROVIDED WITH DIMENSIONS OR NOTED OTHERWISE, ELECTRICAL PLANS ARE STRICTLY DIAGRAMMATIC ONLY. REFER TO THE ARCHITECTURAL DRAWINGS FOR ALL DIMENSIONS, MOUNTING HEIGHTS, ETC. EFFORT HAS BEEN MADE TO PROPERLY ACCOUNT FOR ALL SPACE REQUIREMENTS, CLEARANCES, ETC. BUT SITE CONDITIONS AND PRODUCTS SELECTED MAY VARY AND IT IS THE CONTRACTOR'S RESPONSIBILITY TO MAINTAIN PROPER ARRANGEMENTS AND CLEARANCES. DRAWINGS SHALL NOT BE SCALED.
8. THE CONTRACTOR SHALL BE RESPONSIBLE FOR OBTAINING ALL PERMITS, PAYING ALL ASSOCIATED FEES, AND DOCUMENTING AND FILING ALL PAPERWORK ASSOCIATED WITH THIS SCOPE OF WORK. WHEN THE WORK IS COMPLETE, THE CONTRACTOR SHALL BE RESPONSIBLE FOR OBTAINING ALL REQUIRED CERTIFICATES OF INSPECTION.
9. THE CONTRACTOR IS EXPECTED TO HAVE A FULL FUNCTIONAL KNOWLEDGE OF ELECTRICAL SYSTEMS AND WHETHER INDICATED ON THE DRAWINGS OR NOT SHALL PROVIDE THE CORRECT NUMBER OF WIRES, AT NO ADDITIONAL CHARGE, TO FACILITATE PROPER OPERATION OF ALL EQUIPMENT. QUANTITY OF WIRES WILL ONLY BE INDICATED WHERE NECESSARY FOR CLARIFICATION.
10. THE INSTALLATION SHALL BE IN COMPLIANCE WITH THE AMERICAN WITH DISABILITIES ACT (ADA), UNLESS INSTALLED FOR SPECIFIC USES EXEMPT FROM ADA OR IN AREAS NOT NORMALLY ACCESSED BY BUILDING OCCUPANTS.
11. THE ELECTRICAL CONTRACTOR SHALL REFER TO THE MECHANICAL AND PLUMBING DRAWINGS FOR EXACT LOCATIONS OF EQUIPMENT. PRIOR TO ORDERING ELECTRICAL EQUIPMENT SERVING MECHANICAL & PLUMBING EQUIPMENT, THE ELECTRICAL CONTRACTOR SHALL CONFIRM THE EQUIPMENT BEING ORDERED BY THE HVAC OR PLUMBING CONTRACTORS AND PROVIDE WIRING, CONDUIT, AND OVERCURRENT PROTECTION MEETING THE REQUIREMENTS AT NO ADDITIONAL COST. THE ELECTRICAL CONTRACTOR SHALL BE RESPONSIBLE FOR REVIEWING AND COORDINATING WITH THE HVAC CONTRACTOR FOR PROVIDING ANY NECESSARY LINE AND LOW VOLTAGE WIRING. FINAL TERMINATION TO BE MADE BY THE HVAC CONTRACTOR. ALL BREAKERS SUPPLYING HVAC LOADS SHALL BE HACR TYPE.
12. ALL MATERIALS AND EQUIPMENT FURNISHED SHALL BE NEW (UNLESS NOTED OTHERWISE) AND BEAR THE U.L. LISTING FOR THEIR INTENDED USE. MATCH BUILDING STANDARDS FOR MANUFACTURER AND TYPE OF EQUIPMENT FOR LIGHTS, EXIT SIGNS, FIRE ALARM DEVICES, WIRING DEVICES, AND ELECTRICAL DISTRIBUTION EQUIPMENT. WHERE NO BUILDING STANDARD EXISTS FOR ELECTRICAL EQUIPMENT, EQUIPMENT SHALL BE MANUFACTURED BY G.E., SQUARE-D, EATON CUTLER-HAMMER OR SIEMENS. INSTALL A PLASTIC-LAMINATE SIGN ON EACH NEW UNIT OF ELECTRICAL EQUIPMENT WITH 1/2" ENGRAVED LETTERING FOR IDENTIFICATION. IDENTIFICATION SHALL MATCH CONTRACT DOCUMENTS AND/OR INDICATE SOURCE FED (FOR DISCONNECTS, ETC.).
13. THE FAULT CURRENT RATING OF ALL EQUIPMENT ADDED TO THE ELECTRICAL DISTRIBUTION SHALL MEET THE AVAILABLE FAULT CURRENT. EQUIPMENT ADDED TO THE EMERGENCY SYSTEM SHALL BE SELECTIVELY COORDINATED. EQUIPMENT SHALL BE FULLY RATED UNLESS NOTED OTHERWISE.
14. THE CONTRACTOR SHALL GIVE PERMISSION FOR THE AHJ, ENGINEER, ARCHITECT, INSPECTOR, ETC. TO PERFORM TESTS OF THE ELECTRICAL SYSTEM AS REQUIRED.
15. SWITCH OUTLETS SHALL NOT BE OBSTRUCTED BY DOORSWINGS AND OCCUPANCY SENSORS SHALL HAVE FULL VIEW OF THE INTENDED SPACE.
16. SWITCH AND RECEPTACLES INDICATED IN THE SAME LOCATION SHALL BE MOUNTED UNDER A COMMON COVERPLATE UNLESS OTHERWISE NOTED.
17. EVEN IF THE PLANS INDICATE, OUTLETS SHALL NOT BE INSTALLED PRECISELY BACK TO BACK ON COMMON WALLS. REFER TO THE ARCHITECTURAL DRAWINGS FOR EXACT MOUNTING METHODS AND LOCATIONS.
18. JUNCTION AND PULL BOXES ARE ONLY INDICATED WHERE REQUIRED FOR LARGE SCALE COORDINATION. THE CONTRACTOR SHALL BE RESPONSIBLE FOR FURNISHING JUNCTION AND PULL BOXES AS REQUIRED BY THE CODE AND PER A STANDARD INSTALLATION, AND SHALL INCLUDE THIS IN THEIR BID. BOXES SHALL BE STEEL AND INCLUDE EARS INSIDE TO ATTACH COVERS. OUTLET BOXES SHALL BE FOUR INCH SQUARE DEEP TYPE. OUTLET BOXES FOR 120V OR HIGHER CIRCUITS SHALL INCLUDE A #12 AWG SOLID COPPER PIGTAIL. OUTLET BOXES LOCATED OUTDOOR OR EXPOSED TO WET CONDITIONS SHALL INCLUDE GASKETED COVERS. THE MAXIMUM GAP AROUND BOXES SHALL BE 1/8" OR SMALLER ON ALL EDGES. JUNCTION BOXES SHALL BE COLOR CODED WITH PAINT TO INDICATE THEIR USE AS FOLLOWS: NORMAL POWER - BLACK, STANDBY POWER - ORANGE, FIRE ALARM - RED, TELEPHONE/DATA - YELLOW, HVAC CONTROLS - BLUE.
19. CONDUCTORS SHALL BE LOOPED AROUND SCREW POSTS SO THAT ROTATION OF THE SCREW TENDS TO FURTHER WRAP THE CONNECTION. SCREW TERMINALS SHALL BE WRAPPED IN ELECTRICAL TAPE. AT LEAST 8" OF FREE CONDUCTOR SHALL BE LEFT AT EACH J-BOX, OUTLET AND SWITCH BACK-BOX, ETC FOR FUTURE SPLICING.
20. THE CONTRACTOR SHALL MAINTAIN THE FIRE RATING OF ALL FIRE-RATED PARTITIONS. IF A DEVICE WILL VOID THE FIRE RATING OF A WALL, IT SHALL BE INSTALLED IN AN ALTERNATE LOCATION PER THE ARCHITECT OR ENGINEER'S DIRECTION. ALL VOIDS AROUND CONDUITS AND/OR CORE DRILLS PENETRATING FIRE RATED PARTITIONS SHALL BE FILLED WITH FIRE-SAFING MATERIAL OR UL APPROVED FIRE RATING DEVICE. THE FIRE RATING OF A PARTITION SHALL NEVER BE COMPROMISED.
21. THE CONTRACTOR SHALL MAINTAIN THE INSULATION RATING AND VAPOR BARRIERS ON ALL PERIMETER WALLS. IF A DEVICE WILL DAMAGE OR COMPROMISE THE VAPOR BARRIER OR INSULATION, IT SHALL BE INSTALLED IN AN ALTERNATE LOCATION PER THE ARCHITECT OR ENGINEER'S DIRECTION.
22. ALL EQUIPMENT REQUIRING ACCESS SUCH AS J-BOXES, PULL BOXES, TRANSFORMERS, DRIVERS, ETC. SHALL BE INSTALLED IN ACCESSIBLE LOCATIONS. EXISTING ELECTRICAL DEVICES WHICH ARE LOCATED BEHIND INACCESSIBLE LOCATIONS DUE TO THE RENOVATION SHALL BE REROUTED AND MADE ACCESSIBLE.
23. CONDUITS AND/OR MATERIALS LOCATED IN ENVIRONMENTAL AIR PLENUMS SHALL BE PROPERLY LISTED FOR THE APPLICATION. INTERIOR CONCEALED RACEWAYS MAY BE AC OR MC CABLE IF ALLOWED BY THE AHJ. EXPOSED RACEWAYS, INCLUDING RACEWAYS EXPOSED IN THE BACK OF HOUSE SHALL BE GALVANIZED STEEL OR ALUMINUM EMT. MOTOR CONNECTIONS SHALL BE FLEXIBLE METAL CONDUIT FOR INTERIOR APPLICATIONS AND LIQUID TIGHT FLEX FOR EXTERIOR APPLICATIONS. ALL OTHER EXTERIOR CONDUITS SHALL BE GALVANIZED STEEL, ALUMINUM EMT OR RIGID STEEL IF EXPOSED TO STRIKING. EXTERIOR CONDUITS SHALL UTILIZE COMPRESSION CONNECTORS. AC/MC CABLE SHALL NOT TERMINATE AT PANELBOARDS. A GUTTER OUTSIDE THE ELECTRICAL CLOSET SHALL BE PROVIDED WITH CONDUIT FROM THE GUTTER TO THE PANELBOARD.
24. CABLE AND CONDUIT ROUTING SHALL BE DONE IN A NEAT AND ORDERLY FASHION. LINES SHALL BE RUN PARALLEL TO ALL BUILDING FEATURES, AND SHALL BE GROUPED TOGETHER TO CREATE AN AESTHETICALLY PLEASING AND EASY TO FOLLOW ROUTE. CABLES SHALL BE PERMITTED TO BE BUNDLED BUT SHALL NOT EXCEED TEN IN QUANTITY. ROUTING SHALL BE COORDINATED WITH OTHER TRADES TO AVOID CONFLICT.
25. CONDUITS SHALL BE RIGIDLY SUPPORTED TO THE BUILDING STRUCTURE. AC AND MC CABLES SHALL BE SUPPORTED WITHIN 12" OF EVERY BOX, FITTING, ETC. AND SUPPORT SPACINGS SHALL NOT EXCEED 6' INTERVALS. RIGID CONDUIT SUPPORT SPACINGS SHALL NOT EXCEED 10'-0" FOR VERTICAL RUNS AND 8'-0" FOR HORIZONTAL RUNS, HOWEVER ALL SUPPORT SPACINGS FOR ALL CONDUIT TYPES SHALL BE IN ACCORDANCE WITH THE NEC REGARDLESS OF WHAT IS STATED HERE. COUPLINGS AND FITTINGS SHALL BE STEEL WITH COMPRESSION OR SET STEEL SCREW CONNECTIONS. THERE SHALL NOT BE MORE THAN THE EQUIVALENT OF FOUR QUARTER BENDS (360 DEGREES TOTAL) BETWEEN PULL POINTS FOR POWER (120V OR HIGHER) CIRCUITS AND NOT MORE THAN THE EQUIVALENT OF TWO QUARTER BENDS (180 DEGREES TOTAL) BETWEEN PULL FOR LOW VOLTAGE (TELEPHONE, DATA, ETC) CIRCUITS. LOW VOLTAGE CONDUIT RUNS SHALL ALSO NOT EXCEED 100' BETWEEN PULL POINTS. ALL CONDUITS SHALL BE TERMINATED WITH INSULATED THROAT CONNECTORS FOR CONDUITS 1" AND SMALLER, AND WITH INSULATED BUSHINGS AND LOCKNUTS FOR CONDUITS OVER 1". EMPTY CONDUIT RUNS EXCEEDING 10' SHALL BE PROVIDED WITH PULL WIRES SECURELY FASTENED AT BOTH ENDS. EXPANSION FITTINGS SHALL BE PROVIDED AT ALL BUILDING EXPANSION JOINTS OR WHERE NEEDED TO ALLOW FOR THERMAL EXPANSION.
26. CONDUIT SIZES INDICATED IN PANEL SCHEDULES AND ON THE SINGLE LINE ARE BASED ON TYPE THHN IN EMT. AS OTHER TYPES OF CONDUIT AND CONDUCTORS ARE PERMISSIBLE IN THIS PROJECT, THE CONTRACTOR SHALL ADJUST THE DIMENSION OF THE CONDUIT TO COMPLY WITH CHAPTER 9, TABLE 1 IN THE NEC. ADJUSTMENTS TO THE CONDUIT SIZE SHALL BE PART OF THE BID AND SHALL BE AT NO ADDITIONAL EXPENSE TO THE OWNER.
27. PROVIDE A 3/4" CONDUIT WITH PULLSTRING FOR ALL TELEPHONE AND DATA OUTLETS LOCATED IN INSULATED AND LOW HEIGHT WALLS, TERMINATED ABOVE THE ACCESSIBLE CEILING. GROMMETS SHALL BE PROVIDED AT THE END OF THE CONDUIT AT THE CEILING SPACE. OUTLETS LOCATED IN NON-INSULATED WALLS WILL REQUIRE PULLSTRING ONLY

ELECTRICAL NOTES

25. WIRE SIZES INDICATED ARE BASED UPON DIRECT ORTHOGONAL PATHS TO THE PANELBOARD. FEEDERS ARE SIZED FOR A MAXIMUM OF 2% VOLTAGE DROP, AND BRANCH CIRCUITS ARE DESIGNED FOR A MAXIMUM OF 3% VOLTAGE DROP. IF FIELD CONDITIONS DO NOT ALLOW THESE PATHS OR IF THE CONTRACTOR RUNS ADDITIONAL LENGTHS, THEY SHALL BE RESPONSIBLE FOR INCREASING WIRE SIZE TO ACCOUNT FOR VOLTAGE DROP AT NO ADDITIONAL COST. 20 AMP, 120 VOLT HOMERUNS EXCEEDING 57' SHALL BE A MINIMUM OF #10 AWG. 20 AMP, 277 VOLT HOMERUNS EXCEEDING 131' SHALL BE A MINIMUM OF #10 AWG. WIRING SMALLER THAN #12 AWG SHALL NOT BE USED.
26. THE CONTRACTOR SHALL CIRCUIT PANELBOARDS EXACTLY AS INDICATED IN THE PANEL SCHEDULES. IF ANY DEVIATIONS ARE NECESSARY, THE ENGINEER SHALL BE NOTIFIED. TYPED DIRECTORY CARDS SHALL BE PROVIDED AT EACH PANELBOARD INDICATING LOAD SERVED AND FINAL ROOM NAMES/NUMBERS PER THE NEC. WHEN EXISTING DIRECTORIES ARE REPLACED FOR RENOVATION WORK, EXISTING LOAD INFORMATION SHALL BE DIRECTLY TRANSFERRED TO THE NEW DIRECTORY CARDS.
27. NEUTRAL CONDUCTORS SHALL ONLY BE SHARED WHEN INDICATED ON THE DRAWINGS. WHERE NEUTRALS ARE INDICATED TO BE SHARED, THE NEUTRAL SHALL BE A MINIMUM OF #10 AWG.
28. THE CONTRACTOR SHALL REMOVE ALL UNUSED AND ABANDONED WIRING AND CABLING FROM THE CEILING PLENUM THAT ISN'T LABELED FOR FUTURE USE, AS REQUIRED BY THE NEC. THIS SHALL INCLUDE BUT IS NOT LIMITED TO FIRE ALARM, POWER, SECURITY, CONTROLS, DATA, TELEPHONE, A/V, ETC.
29. ALL BRANCH CIRCUIT CONDUCTORS AND FEEDER CIRCUITS 100A OR SMALLER SHALL BE COPPER. FEEDER CIRCUITS SERVING LOADS LARGER THAN 100A MAY BE EITHER COPPER OR ALUMINUM, HOWEVER THE DESIGN IS BASED AROUND COPPER AND THE CONTRACTOR WILL BE RESPONSIBLE FOR ACCOUNTING FOR INCREASED WIRE SIZE, CONDUIT SIZE, AND SPACE TAKEN BY THE LARGER CONDUIT IF ALUMINUM IS USED. HOWEVER, BRANCH CIRCUITS FEEDING MOTORS SHALL ALWAYS BE COPPER REGARDLESS. CONDUCTORS #10 AWG AND SMALLER SHALL BE SOLID, AND CONDUCTORS #8 AWG AND LARGER SHALL BE STRANDED. CONDUCTORS SHALL BE CODE TYPE THW, THHN, THWN, OR XHHW UNLESS OTHERWISE REQUIRED BY THE NEC. CONDUCTORS SHALL BE MARKED WITH INSULATION CODE, VOLTAGE RATING, AWG SIZE, AND MANUFACTURER AND INCLUDE A CONTINUOUS COLOR CODING FROM PANEL TO LOAD SERVED. WHERE CONTINUOUS MARKINGS ARE NOT AVAILABLE, USE COLOR CODED TAPE AT EACH TERMINATION. #8 AWG AND SMALLER CONDUCTORS SHALL BE SPLICED WITH SPRING CONNECTORS. #6 AWG AND LARGER SHALL BE SPLICED WITH BARREL CONNECTORS REQUIRING COMPRESSION ON EACH END.
30. ALL EMERGENCY EGRESS, STANDBY LIGHTING, AND EXIT LIGHTING SHALL HAVE A BATTERY BALLAST WITH RUN TIME MEETING OR EXCEEDING 90 MINUTES. THE BATTERY BALLAST SHALL NOT BE CAPABLE OF BEING DISCONNECTED. REGARDLESS OF MODEL NUMBER SPECIFIED, LIGHT FIXTURES SPECIFIED WITH BACKUP BATTERY BALLASTS SHALL HAVE THE TEST BUTTON INTEGRALLY MOUNTED WHERE POSSIBLE. WHERE FIXTURES ARE NOT AVAILABLE WITH INTEGRALLY MOUNTED TEST BUTTONS, THE TEST BUTTONS SHALL BE LOCATED IN A DISCRETE LOCATION AS DETERMINED BY THE ARCHITECT, UP TO 50' AWAY FROM THE FIXTURE.
31. THE CONTRACTOR SHALL PROVIDE THE PROPER FIXTURE TYPE FOR THE CEILING OR WALL TYPE WHICH THE FIXTURE IS TO BE INSTALLED IN INCLUDING TRIM, MOUNTING ACCESSORIES ETC. REGARDLESS OF THE MODEL NUMBERS IN THE LIGHT FIXTURE SCHEDULE. THE CORRECT MOUNTING TYPE SHALL BE PROVIDED. THE CONTRACTOR SHALL REFER TO INTERIOR DESIGNER, ARCHITECTURAL, LANDSCAPE, OR OTHER CONSULTANT PLANS FOR ADDITIONAL INFORMATION AND REQUIREMENTS. WHERE THERE IS A DISCREPANCY BETWEEN ELECTRICAL PLANS AND OTHER CONSULTANT PLANS, THE OTHER CONSULTANT PLANS SHALL TAKE PRIORITY EXCEPT FOR VOLTAGE AND WATTAGE OF FIXTURES. FIXTURE TYPES IN THE LIGHT FIXTURE SCHEDULE ARE TO ESTABLISH A TYPE, NOT A METHOD OF MOUNTING. FLUORESCENT FIXTURES THAT UTILIZE DOUBLE-ENDED LAMPS AND CONTAIN BALLASTS THAT CAN BE SERVICED IN PLACE SHALL HAVE A DISCONNECTING MEANS, UNLESS THE FIXTURE IS USED FOR EMERGENCY LIGHTING. ALL BALLASTS SHALL BE ELECTRONIC, LESS THAN 20% THD, CREST FACTOR OF 1.7 FOR FLUORESCENTS AND 1.8 FOR METAL HALIDES, HIGH POWER FACTOR, AND RATED FOR THE TYPE OF LAMP IT OPERATES. MANUFACTURERS SHALL BE GE, ADVANCE, MAGNETEK, MOTOROLA, LUTRON, OR OTHER APPROVED EQUAL. LIGHT FIXTURES, BALLASTS, TRANSFORMERS, DRIVERS, ETC LOCATED IN A WET OR DAMP LOCATION SHALL BE LISTED FOR SAID USE. LIGHT FIXTURES INSTALLED IN AREAS HAVING EXPOSED FOOD OR FOOD PREPARATION AREAS OR KITCHENS SHALL BE PROPERLY LENSED AND HAVE SHATTER PROOF LAMPS.
32. ALL LIGHT FIXTURES SHALL BE SUPPORTED FROM THE BUILDING STRUCTURAL SYSTEM BY SUPPORT WIRES, INDEPENDENT OF CEILING GRID SYSTEMS. TROFFER TYPE FIXTURES SHALL BE SUPPORTED BY WIRES AT ALL FOUR CORNERS. RECESSED DOWNLIGHTS SHALL BE SUPPORTED VIA HANGER BARS SUPPORTED BY WIRES AT ALL FOUR CORNERS. SUPPORT MEANS SHALL BE IN ACCORDANCE WITH LOCAL SEISMIC REQUIREMENTS.
33. THE EQUIPMENT GROUNDING SYSTEM SHALL CONSIST OF AN ELECTRICALLY CONTINUOUS METALLIC CONDUIT SYSTEM TOGETHER WITH INSULATED EQUIPMENT GROUNDING CONDUCTORS. EVERY ITEM SERVED BY THE ELECTRICAL SYSTEM SHALL BE PROPERLY GROUNDED IN ACCORDANCE WITH NEC ARTICLE 250. THIS SHALL INCLUDE RACEWAYS, JUNCTION/OUTLET BOXES, MACHINE FRAMES, ETC. ALL BRANCH CIRCUITS AND FEEDERS SHALL HAVE A GREEN INSULATED EQUIPMENT GROUNDING CONDUCTOR OR GROUND ELECTRODE SIZED IN ACCORDANCE WITH THE NEC. PROVIDE BONDING JUMPERS FOR ALL NON-CURRENT CARRYING CONDUCTORS OF DIFFERENT SYSTEMS TO ENSURE NO VOLTAGE POTENTIAL. METAL GAS PIPING SHALL ONLY BE GROUNDED AT EQUIPMENT HOUSING BOTH ELECTRICAL CIRCUITS AND UTILIZING GAS VIA THE EQUIPMENT GROUND ROUTED WITH THE CIRCUIT. ALL GROUND WIRES SHALL BE COPPER.
34. SUBMITTALS SHALL BE SUBMITTED ELECTRONICALLY IN PDF FORMAT. THE CONTRACTOR SHALL ALLOW FOR A TOTAL OF 10 BUSINESS DAYS FOR REVIEW BY THE ENGINEER. SUBMITTALS SHALL INCLUDE PANELBOARDS, TRANSFORMERS, DISCONNECTS, WIRING DEVICES, UPS'S, LIGHT FIXTURES, TVSS, AND FIRE ALARM SYSTEM. SUBMITTALS SHALL ONLY INCLUDE DATA RELEVANT TO THIS PROJECT: DATA SHEETS INDICATING SEVERAL PRODUCTS SHALL HAVE THE RELEVANT PRODUCTS HIGH-LITED OR CLEARLY IDENTIFIED. SIMILAR EQUIPMENT SHALL BE SUBMITTED IN ONE COMPLETE SUBMITTAL PACKAGE (I.E. ALL PANELBOARDS, ALL LIGHTING FIXTURES, ETC.).
35. PROVIDE PAD LOCKING HARDWARE ON CIRCUIT BREAKERS FOR EQUIPMENT WHICH IS HARDWIRED WITHOUT A LOCAL DISCONNECTING MEANS THAT ARE NOT WITHIN SIGHT OF THE PANELBOARD.
36. PROVIDE RECEPTACLES SIMILAR TO PASS & SEYMOUR #CR20 SERIES AND LIGHT SWITCHES SIMILAR TO PASS & SEYMOUR #20AC1 SERIES. COVER PLATES SHALL BE AS SPECIFIED BY THE ARCHITECT OR BRUSHED STAINLESS STEEL. CONFIRM ALL DEVICE COLORS WITH THE ARCHITECT.
37. DUPLEX OUTLETS SHALL BE NEMA 5-20R WHEN THEY ARE THE ONLY LOAD ON A CIRCUIT.
38. WALL MOUNTED OCCUPANCY SENSORS SHALL BE PASSIVE INFRARED, MANUAL-ON, AUTO-OFF SIMILAR TO WATT STOPPER PW-100-W. CEILING MOUNTED OCCUPANCY SENSORS FOR CORRIDORS SHALL BE LONG RANGE PASSIVE INFRARED SIMILAR TO WATT STOPPER CX-100-1. CEILING MOUNTED OCCUPANCY SENSORS FOR CONFERENCE ROOMS, LOBBIES, AND OTHER SIMILAR AREAS SHALL BE DUAL TECHNOLOGY PASSIVE INFRARED AND ULTRASONIC SIMILAR TO WATT STOPPER DT-300. DEVICES SHALL BE MOUNTED SUCH THAT THE SENSORS HAVE FULL COVERAGE OF THE INTENDED AREAS AND PER THE MANUFACTURER'S RECOMMENDATIONS. PROVIDE ALL ACCESSORIES NECESSARY FOR A FULLY FUNCTIONING SYSTEM, INCLUDING POWER PACKS, CONTROL AND POWER WIRING, BACKBOXES, ETC. POWER PACKS FOR CEILING MOUNTED SENSORS SHALL BE PROVIDED, SIMILAR TO WATT STOPPER BZ-150. SENSORS SHALL BE WATT STOPPER, HUBBEL, COOPER, OR LUTRON PROVIDED IT IS EQUIVALENT OR EXCEEDS THE REQUIREMENTS LISTED HEREIN. THE CONTRACTOR SHALL FULLY COMMISSION THE OCCUPANCY SENSORS SYSTEM TO CONFIRM IT IS FUNCTIONING AS INTENDED.
39. TRANSFORMERS SHALL BE DRY TYPE, 60 HERTZ, 480V 3 PHASE DELTA TO 120/208V 3 PHASE, 4 WIRE GROUNDED WYE. TEMPERATURE CLASSIFICATION SYSTEM SHALL BE A MINIMUM OF 155°C INSULATION SYSTEM, WINDING TEMPERATURE RISE SHALL NOT EXCEED 150°C IN A 40°C AMBIENT. TRANSFORMERS SHALL HAVE FOUR 2-1/2% FULL LOAD TAPS BELOW RATED VOLTAGE AND TWO 2-1/2% FULL LOAD TAPS ABOVE RATED VOLTAGE. INTERNAL VIBRATION ISOLATION MOUNTS SHALL BE PROVIDED.
40. PANELBOARDS SHALL HAVE COPPER FULL SIZE PHASE BUSSES, NEUTRAL BUSSES, AND BOLTED ON COPPER GROUNDING BUS WITH MAIN LUGS. BUS BAR CONNECTIONS SHALL BE COLUMN CONSECUTIVE PHASE-SEQUENCE TYPE. BUS BARS SHALL BE DRILLED AND EQUIPPED FOR BOLT-ON MOLDED CASE CIRCUIT BREAKERS. SHORT CIRCUIT BRACING AND BREAKER INTERRUPTING CAPACITY SHALL BE AS INDICATED ON THE PANEL SCHEDULES, BUT SHALL NOT BE BELOW 10,000 A.I.C. FOR 120/208V PANELS AND 14,000 A.I.C. FOR 277/480V PANELS. PANEL CONSTRUCTION SHALL BE HINGED DOOR IN DOOR COVERS WITH MASTER-KEYED DOOR LOCKS, GALVANIZED SHEET STEEL CABINETS WITH MULTIPLE KNOCKOUTS, WIRING GUTTERS, AND SPACE FOR A TYPED CIRCUIT DIRECTORY. MAIN BREAKERS OR MAIN LUGS ONLY SHALL BE PROVIDED AS INDICATED IN THE PANEL SCHEDULES. PANELS SHALL BE PROVIDED WITH FEED THRU LUGS UNLESS OTHERWISE NOTED.
41. TVSS SHALL BE INSTALLED IN EACH MAIN DISTRIBUTION PANEL. EACH MODE SHALL BE INDIVIDUALLY FUSED. PROVIDE A LOAD SIDE CIRCUIT BREAKER TO DISCONNECT THE TVSS IN THE EVENT OF FAILURE. THE TVSS SHALL PROVIDE 200 kA PER PHASE; THE PEAK SURGE CURRENT RATING SHALL BE THE ARITHMETIC SUM OF THE RATINGS OF THE INDIVIDUAL MOVS IN A GIVEN MODE. PHYSICAL WIRING LENGTH SHALL NOT EXCEED 6" FROM THE PROTECTED BUS TO THE TVSS.
42. MOLDED CASE CIRCUIT BREAKERS SHALL BE THERMAL MAGNETIC AND AMBIENT COMPENSATED INVERSE TIME-DELAY OVERLOAD AND INSTANTANEOUS SHORT CIRCUIT PROTECTED, FULL SIZE, BOLT-ON, WITH A QUICK-MAKE, QUICK-BREAK OVER-CENTER SWITCHING MECHANISM THAT IS MECHANICALLY TRIP-FREE FROM THE HANDLE SUCH THAT THE CONTACTS CAN NOT BE CLOSED AGAINST SHORT CIRCUITS. CONTACTS SHALL BE NON-WELDING SILVER ALLOY. TRIPPING DUE TO OVERLOAD OR SHORT CIRCUIT SHALL BE INDICATED BY THE BREAKER RESTING AT A MID POINT BETWEEN THE ON AND OFF POSITIONS. AMPERE AND FAULT CURRENT RATINGS SHALL BE CLEARLY VISIBLE. BREAKERS SHALL BE LISTED FOR USE WITH 75°C AND 60°C CONDUCTORS. MULTI-POLE BREAKERS SHALL BE OF THE COMMON TRIP TYPE HAVING A SINGLE HANDLE. WHERE NEUTRALS ARE SHARED AMONG CIRCUITS, THE CONTRACTOR SHALL PROVIDE MULTI-POLE BREAKERS TO SIMULTANEOUSLY DISCONNECT ALL CIRCUITS IN THE EVENT OF ONE TRIPPING; IN THIS CASE SINGLE POLE BREAKERS MAY BE CONNECTED BY A COMMON TRIP HANDLE.
43. MOLDED CASE CIRCUIT BREAKERS INDICATED FOR SHUNT TRIP SHALL BE 60 HERTZ, FACTORY INSTALLED, AND HAVE A 120 VOLT COIL CIRCUITED FROM A 120/208V PANEL PROVIDED BY THE CONTRACTOR. SHUNT TRIP BREAKERS SHALL TAKE ONE POLE SPACE IN PANELBOARDS AND MAY BE EITHER LEFT OR RIGHT MOUNTED. THE SHUNT TRIP ACTIVATION DEVICE SHALL BE A MOMENTARY CLOSE CONTACT TYPE.
44. ALL FUSES SHALL BE DUAL-ELEMENT LOW PEAK CLASS RK1 AS MANUFACTURED BY BUSSMAN OR LITTLE FUSE. FUSE VOLTAGE RATING SHALL BE 250 VOLT FOR 120/208 VOLT SYSTEM AND 600 VOLT FOR 277/480 VOLT SYSTEM.
45. DISCONNECT SWITCHES SHALL BE HEAVY DUTY TYPE, HIGH I2T RATED, APPROVED FOR SERVICE ENTRANCE APPLICATIONS. DISCONNECT SWITCHES SPECIFIED FOR 208 VOLT CIRCUITS SHALL BE RATED AT 240 VOLT, AND DISCONNECT SWITCHES SPECIFIED AT 480 VOLT SHALL BE RATED AT 600 VOLT. ALL DISCONNECTS SHALL BE QUICK-MAKE, QUICK-BREAK TYPE AND HAVE PROVISIONS FOR ACCOMMODATING R TYPE FUSES. SWITCHES IN EXTERIOR LOCATIONS SHALL BE NEMA TYPE 4X, AND INDOOR SWITCHES EXPOSED TO WET OR DAMP CONDITIONS SHALL BE NEMA TYPE 3R. SWITCHES SHALL HAVE PROVISIONS FOR PADLOCKING. SWITCHES SHALL BE PREVENTED FROM OPENING WHILE SWITCH IS ON. FUSED DISCONNECTS SHALL BE PROVIDED WHEN REQUIRED BY THE MANUFACTURER OR BY THE LOCAL INSPECTING AUTHORITY.
46. PROVIDE A 15A 120 VOLT CIRCUITS FOR ALL SMOKE AND COMBINATION FIRE/SMOKE DAMPERS AND ASSOCIATED SMOKE DETECTOR FOR ALL SMOKE DAMPERS AS SHOWN AND REQUIRED ON THE MECHANICAL DRAWINGS. UPON ACTIVATION, SMOKE DETECTOR SHALL SIGNAL FOR DAMPER TO CLOSE. SYSTEM SHALL BE TIED INTO THE BUILDING FIRE ALARM SYSTEM.

ELECTRICAL NOTES

43. SMOKE DETECTORS IN COMPUTER ROOM AC UNITS SHALL BE TIED INTO THE BUILDING FIRE ALARM SYSTEM.
44. PROVIDE PHOTOELECTRIC TWIST IN TYPE SMOKE DETECTORS WITH ACCESS DOORS IN ALL FANS AND AHU'S SERVING A COMMON PLENUM OF 2000 CFM OR ABOVE. ALL SMOKE DETECTORS SHALL BE BY ONE MANUFACTURER, AND SHALL COMPLY WITH UL 268A. LOCATE THE SMOKE DETECTORS IN THE SUPPLY AIR DUCT FOR INSTALLATIONS IN COMPLIANCE WITH THE FLORIDA BUILDING CODE. THE DETECTORS SHALL BE PROVIDED BY THE ELECTRICAL CONTRACTOR & INSTALLED IN THE DUCT BY THE MECHANICAL CONTRACTOR. ELECTRICAL CONNECTION SHALL BE BY ELECTRICAL CONTRACTOR. UPON SMOKE DETECTION, ALL ASSOCIATED AIR MOVING EQUIPMENT SERVING A COMMON PLENUM WILL BE SHUT DOWN. TIE FIRE ALARM DEVICES INTO EXISTING FIRE ALARM SYSTEM (IF APPLICABLE).
45. ALL 15 AND 20A RECEPTACLES LOCATED IN KITCHENS, WITHIN 6' OF SINKS, BATHROOMS, IN EXTERIOR LOCATIONS, IN AREAS EXPOSED TO WET CONDITIONS, ROOFTOPS, IN ELEVATOR SHAFTS, AND IN ELEVATOR MACHINE ROOMS SHALL BE GFI TYPE. IF A SIMPLEX RECEPTACLE IS REQUIRED, THE CIRCUIT BREAKER SHALL BE GFI TYPE.

ELECTRICAL SYMBOL LEGEND

Symbol	Description
$	SINGLE POLE, 20 AMP, SWITCH.
$3	3-WAY, 20 AMP, SWITCH.
$4	4-WAY, 20 AMP, SWITCH.
$D	DIMMER SWITCH, USE NTF-10-WH FOR FLUORESCENT FIXTURES, USE NTFTV-WH WITH PH-120H FOR LED FIXTURES. CONFIRM COLOR SELECTION WITH ARCHITECT PRIOR TO ORDERING.
$OS	SINGLE POLE, 20 AMP, SWITCH WITH OCCUPATIONAL SENSOR.
$M	30A MANUAL SWITCH
$T	SWITCH WITH THERMAL OVERLOAD PROTECTION (MANUAL MOTOR STARTER)
$	TWO POLE, 30 AMP SWITCH. MOUNT ADJACENT EQUIPMENT TO BE CONTROLLED.
	PHOTO CELL
	20 AMP SIMPLEX RECEPTACLE
	20 AMP DUPLEX RECEPTACLE
	20 AMP QUADRUPLEX RECEPTACLE
GFI	20 AMP DUPLEX RECEPTACLE WITH GROUND FAULT CIRCUIT INTERRUPTER.
IG	20 AMP DUPLEX RECEPTACLE WITH ISOLATED GROUND.
	WIREMOLD RFB4 20 AMP QUADRUPLEX RECEPTACLE WITH DATA/TELEPHONE, RECESS FLOOR MOUNTED BOX.
	20 AMP DUPLEX RECEPTACLE, CEILING MOUNTED.
WP	20 AMP DUPLEX RECEPTACLE, WEATHERPROOF WHILE-IN-USE.
	WIREMOLD RC4ATCAL 20 AMP QUADRUPLEX, DATA/TELEPHONE FLOOR RECEPTACLE
	SPECIAL-PURPOSE RECEPTACLE; NEMA TYPE AS INDICATED.
	JUNCTION BOX
PB	PULL BOX
	SINGLE PHASE MOTOR
	TELEPHONE OUTLET WITH 3/4" CONDUIT STUBBED OUT FROM WALL 6" ABOVE CEILING.
	DATA OUTLET WITH 1" CONDUIT STUBBED OUT FROM WALL 6" ABOVE CEILING.
	TELEPHONE/DATA OUTLET WITH 1" CONDUIT STUBBED OUT FROM WALL 6" ABOVE CEILING.
	TELEPHONE/DATA OUTLET FLOOR RECESSED.
	EMERGENCY LIGHT
	HATCHING - LIGHT FIXTURE CONNECTED TO EM SOURCE OR PROVIDED WITH EMERGENCY BATTERY BALLAST
	RECESSED FLUORESCENT LAMP 2'X4'
	RECESSED FIXTURE
	RECESSED FLUORESCENT LAMP 2'X2'
	WALL MOUNTED FIXTURE
	FUSIBLE DISCONNECT SWITCH NFSS = NON FUSED, FSSS = FUSED
	GROUNDING ELECTRODE & CONDUCTOR SYSTEM
T	TRANSFORMER
	TELEPHONE WOOD BACKBOARD
	120/208V ELECTRICAL PANELBOARD; MANDATORY CLEARANCE INDICATED WITH DASHED LINES.
	277/480V ELECTRICAL PANELBOARD; MANDATORY CLEARANCE INDICATED WITH DASHED LINES.
	WIRE CONCEALED IN WALLS, CEILINGS. NUMBER OF TICK MARKS INDICATES QUANTITY OF WIRES. GROUND WIRE IS IN ADDITION TO WIRES INDICATED. NO TICK MARKS INDICATES TWO WIRES PLUS GROUND.
TV	TELEVISION OUTLET; PROVIDE 3/4" CONDUIT STUBBED UP TO ACCESSIBLE CEILING
	EXIT SIGN. SHADED SIDES INDICATE FACES. ARROWS INDICATE CHEVRONS.
	THREE PHASE MOTOR
	INTEGRAL STARTER OR CONTROLLER AND DISCONNECT CABINET BY THE MECHANICAL CONTRACTOR
M/VD	MOTORIZED DAMPER BY MECHANICAL CONTRACTOR. ELECTRICAL CONTRACTOR SHALL WIRE TO NEAREST G.P. RECEPTACLE CIRCUIT USING 2#12, 1#12 G. IN 1/2" CONDUIT.
PP	POWER PACK USED FOR 12 OR 24V DC OCCUPANCY SENSORS
	METER
	AUTOMATIC TRANSFER SWITCH
	MOLDED CASE CIRCUIT BREAKER
	CEILING MOUNTED DUAL TECHNOLOGY OCCUPANCY SENSOR. ARROWS INDICATE DIRECTION OF COVERAGE.
	SPEAKER LOCATION - PROVIDE 3/4" CONDUIT STUBBED UP TO ACCESSIBLE CEILING SPACE.
	MOTION DETECTOR LOCATION FOR SECURITY SYSTEM
WNET	WIRELESS NETWORK ACCESS LOCATION
	SECURITY CAMERA LOCATION. FOR CAMERAS SHOWN ON EXTERIOR OF BUILDING, PROVIDE 3/4" CONDUIT TO ACCESSIBLE CEILING SPACE.
BR	BADGE READER LOCATION - PROVIDE 3/4" CONDUIT STUBBED UP TO ACCESSIBLE CEILING SPACE. ALSO PROVIDE 3/4" CONDUIT FROM ELECTRIC STRIKE TO ACCESSIBLE CEILING SPACE.
DR	DOOR RELEASE LOCATION - PROVIDE 3/4" CONDUIT FROM ELECTRIC STRIKE TO ACCESSIBLE CEILING SPACE. ALSO COORDINATE LOCATION IN RECEPTION AREA FOR PUSH-BUTTON TO ACTIVATE DOOR RELEASE AND PROVIDE 3/4" CONDUIT FROM THAT LOCATION TO ACCESSIBLE CEILING SPACE.

NOTE: NOT ALL SYMBOLS MAY APPLY TO PLANS

ELECTRICAL SHEET INDEX

E0.1	ELECTRICAL NOTES, LEGEND & ABBREVIATIONS
E0.2	ELECTRICAL DETAILS
E0.3	ELECTRICAL SITE PLAN
E1.1	ELECTRICAL 1st FLOOR LIGHTING PLAN
E1.2	ELECTRICAL 2nd FLOOR LIGHTING PLAN
E2.1	ELECTRICAL 1st FLOOR POWER PLAN
E2.2	ELECTRICAL 2nd FLOOR & ROOF POWER PLAN
E3.1	ELECTRICAL 1st FLOOR FIRE ALARM PLAN
E3.2	ELECTRICAL 2nd FLOOR FIRE ALARM PLAN
E4.1	ELECTRICAL RISERS & DETAILS
E5.1	ELECTRICAL PANEL SCHEDULES

ELECTRICAL ABBREVIATIONS

A	- AMPERE	KW	- KILOWATT
AC	- ALTERNATING CURRENT	LTG	- LIGHTING
AF	- AMP FRAME	M	- METER
AFF	- ABOVE FINISHED FLOOR	MCA	- MINIMUM CIRCUIT AMPACITY
AHJ	- AUTHORITY HAVING JURISDICTION	MCB	- MAIN CIRCUIT BREAKER
AT	- AMP TRIP	MCC	- MOTOR CONTROL CENTER
ATC,BMS,EMCS	- HVAC CONTROLS	MFR	- MANUFACTURER
ATS	- AUTOMATIC TRANSFER SWITCH	MH	- MOUNTING HEIGHT
AIC	- AMPS INTERRUPTING CAPACITY	MI	- MINERAL INSULATED
BRKR	- BREAKER	MLO	- MAIN LUGS ONLY
C or COND	- CONDUIT	MOP	- MAXIMUM OVERCURRENT PROTECTION
CD	- CANDELA	MS	- MAIN SWITCHBOARD
CKT	- CIRCUIT	NEC	- NATIONAL ELECTRICAL CODE
CT	- CURRENT TRANSFORMER	N	- NEW
CU	- COPPER	NA	- NOT APPLICABLE
DN	- DOWN	NC	- NORMALLY CLOSED
DPV	- DRY PIPE VALVE CABINET	NF	- NON-FUSED
DWG	- DRAWING	NFPA	- NATIONAL FIRE PROTECTION ASSOCIATION
DC	- DIRECT CURRENT	NFSS	- NON-FUSED SAFETY SWITCH
(E) or EXIST	- EXISTING	NIC	- NOT IN CONTRACT
EC	- EMPTY CONDUIT	NO	- NORMALLY OPEN
ELEV	- ELEVATOR	OCPD	- OVERCURRENT PROTECTION DEVICE
EMER	- EMERGENCY	P	- POLE
EMR	- ELEVATOR MACHINE ROOM	PH OR Ø	- PHASE
EMT	- ELECTRIC METALLIC TUBING	NEMA	- NATIONAL ELECTRIC MANUFACTURERS ASSOCIATION
EPO	- EMERGENCY POWER OFF		
EUH	- ELECTRIC UNIT HEATER	PB	- PULL BOX
EWC	- ELECTRIC WATER COOLER	PC	- PHOTOCELL
EWH	- ELECTRICAL WATER HEATER	PNL	- PANELBOARD
F	- FUSE	PLC	- PROGRAMMABLE LOGIC CONTROLLER
FA	- FIRE ALARM	RECEPT	- RECEPTACLE
FCA	- FAULT CURRENT AVAILABLE	RM	- ROOM
FCR	- FAULT CURRENT RATING	SWBD	- SWITCHBOARD
FSS	- FUSED SAFETY SWITCH	THD	- TOTAL HARMONIC DISTORTION
FTL	- FEED THRU LUGS	TVSS	- TRANSIENT VOLTAGE SURGE SUPPRESSION
G, GND	- GROUND	TYP	- TYPICAL
GFI	- GROUND FAULT INTERRUPT	UL	- UNDERWRITERS LABORATORIES
GFP	- GROUND FAULT PROTECTION	UNO	- UNLESS NOTED OTHERWISE
HZ	- HERTZ	UPS	- UNINTERRUPTIBLE POWER SUPPLY
HP	- HORSEPOWER	V	- VOLT
IBC	- INTERNATIONAL BUILDING CODE	VFD	- VARIABLE FREQUENCY DRIVE
IG	- ISOLATED GROUND	W	- WATT
J	- JUNCTION BOX	W/	- WITH
KVA	- KILOVOLT-AMPERE	WP	- WEATHERPROOF
		XFMR	- TRANSFORMER

RGD
CONSULTING ENGINEERS
RYAN D. MORRIS
FLORIDA P.E. NO. 76436
ELECTRICAL ENGINEER
CERT OF AUTH 6464
DATE 9.19.2014

HARVARD • JOLLY
ARCHITECTURE
FL Lauderdale 954-486-7910
Ft. Myers 239-275-7774
Jacksonville 904-396-3300
Orlando 407-667-7727
Punta Gorda 941-575-0403
St. Petersburg 727-896-4611
Tampa 813-286-8206
West Palm Beach 561-478-4457
AAC000119
www.HarvardJolly.com
WEST PALM BEACH, FL.

NEW CLASSROOM BUILDING
RIVIERA BEACH MARITIME ACADEMY
RIVIERA BEACH, FLORIDA
CONTRUCTION DOCUEMENTS

Comm. No:	214031.00
Date:	09-24-14
Drawn:	RGD
Revised:	

copyright 2014

E0.1

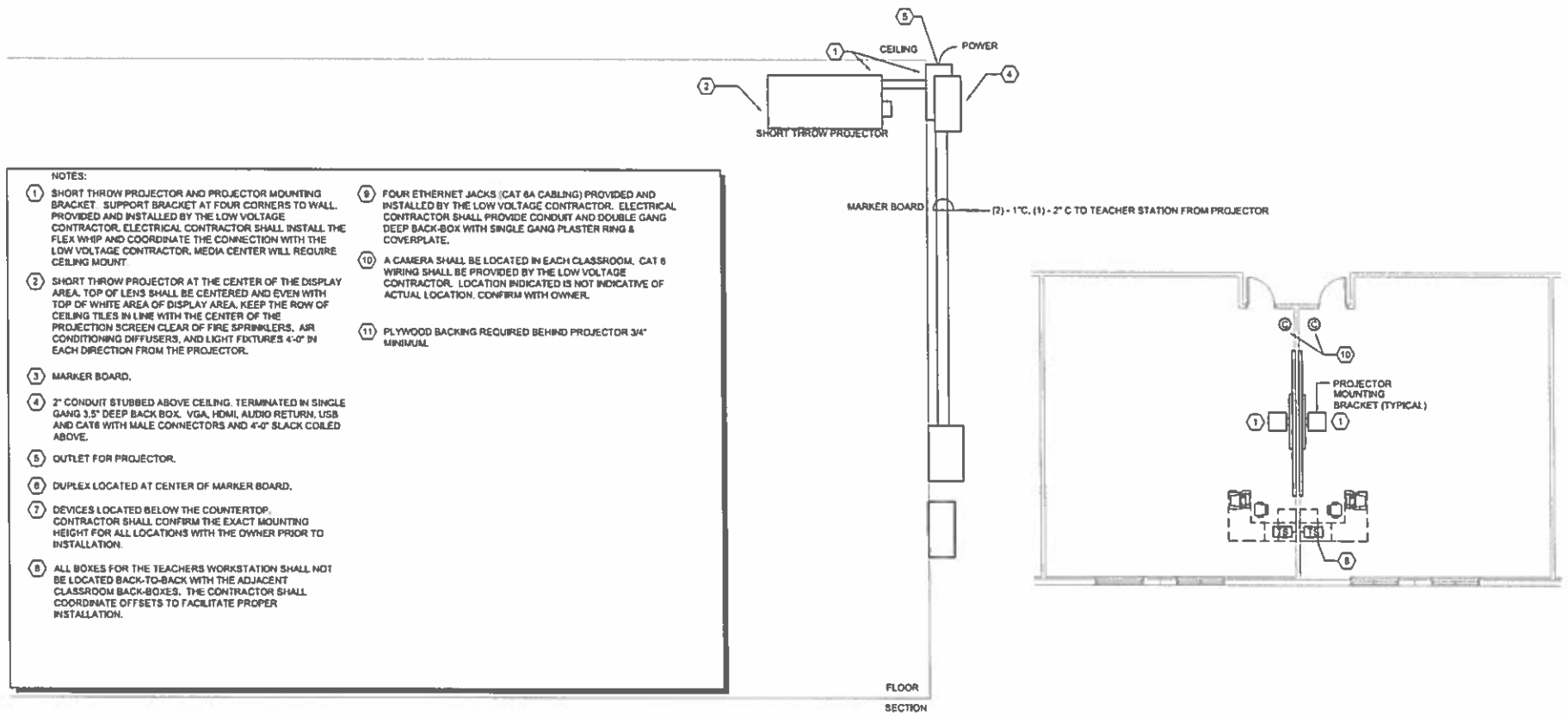

NOTES:

1. SHORT THROW PROJECTOR AND PROJECTOR MOUNTING BRACKET. SUPPORT BRACKET AT FOUR CORNERS TO WALL. PROVIDED AND INSTALLED BY THE LOW VOLTAGE CONTRACTOR. ELECTRICAL CONTRACTOR SHALL INSTALL THE FLEX WHIP AND COORDINATE THE CONNECTION WITH THE LOW VOLTAGE CONTRACTOR. MEDIA CENTER WILL REQUIRE CEILING MOUNT.
2. SHORT THROW PROJECTOR AT THE CENTER OF THE DISPLAY AREA. TOP OF LENS SHALL BE CENTERED AND EVEN WITH TOP OF WHITE AREA OF DISPLAY AREA. KEEP THE ROW OF CEILING TILES IN LINE WITH THE CENTER OF THE PROJECTION SCREEN CLEAR OF FIRE SPRINKLERS, AIR CONDITIONING DIFFUSERS, AND LIGHT FIXTURES 4'-0" IN EACH DIRECTION FROM THE PROJECTOR.
3. MARKER BOARD.
4. 2" CONDUIT STUBBED ABOVE CEILING. TERMINATED IN SINGLE GANG 3.5" DEEP BACK BOX. VGA, HDMI, AUDIO RETURN, USB AND CAT6 WITH MALE CONNECTORS AND 4'-0" SLACK COILED ABOVE.
5. OUTLET FOR PROJECTOR.
6. DUPLEX LOCATED AT CENTER OF MARKER BOARD.
7. DEVICES LOCATED BELOW THE COUNTERTOP. CONTRACTOR SHALL CONFIRM THE EXACT MOUNTING HEIGHT FOR ALL LOCATIONS WITH THE OWNER PRIOR TO INSTALLATION.
8. ALL BOXES FOR THE TEACHERS WORKSTATION SHALL NOT BE LOCATED BACK-TO-BACK WITH THE ADJACENT CLASSROOM BACK-BOXES. THE CONTRACTOR SHALL COORDINATE OFFSETS TO FACILITATE PROPER INSTALLATION.
9. FOUR ETHERNET JACKS (CAT 6A CABLING) PROVIDED AND INSTALLED BY THE LOW VOLTAGE CONTRACTOR. ELECTRICAL CONTRACTOR SHALL PROVIDE CONDUIT AND DOUBLE GANG DEEP BACK-BOX WITH SINGLE GANG PLASTER RING & COVERPLATE.
10. A CAMERA SHALL BE LOCATED IN EACH CLASSROOM. CAT 6 WIRING SHALL BE PROVIDED BY THE LOW VOLTAGE CONTRACTOR. LOCATION INDICATED IS NOT INDICATIVE OF ACTUAL LOCATION. CONFIRM WITH OWNER.
11. PLYWOOD BACKING REQUIRED BEHIND PROJECTOR 3/4" MINIMUM.

1 TYPICAL CLASSROOM WIRING PLAN

THE COMPONENTS OF THIS DETAIL APPLY TO ALL LOCATIONS WHERE AN AV STATION IS INDICATED. CONDITIONS MAY VARY SLIGHTLY IN ROOMS THAT ARE NOT TYPICAL CLASSROOMS. SEE PLANS FOR NOTES REQUIRING MODIFICATIONS.

SCALE: NONE

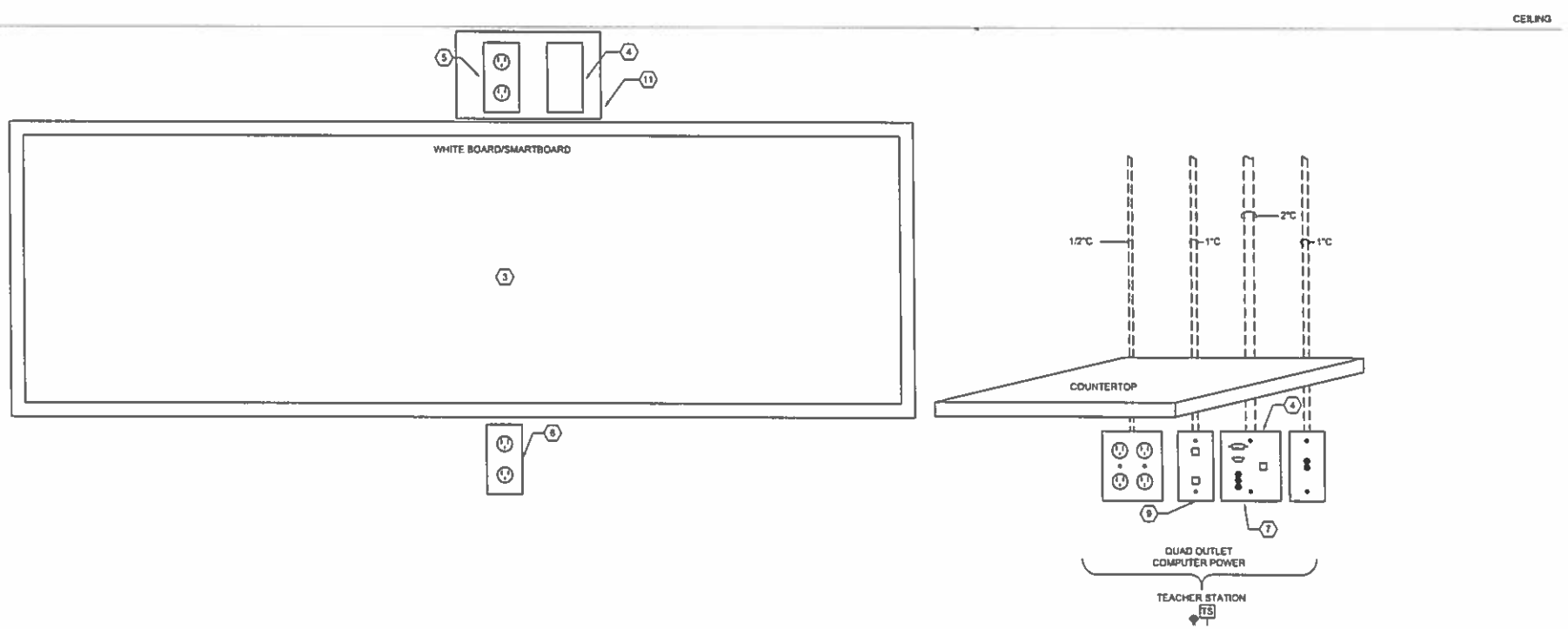

SYSTEMS GENERAL NOTES

1. SMART BOARD:
   - 1.1. EVERY CLASSROOM, SPECIALTY ROOM, CONFERENCE ROOM, AND MULTIPURPOSE ROOM WILL RECEIVE A SMART BOARD FURNISHED BY OWNER.
   - 1.2. EACH LOCATION WILL REQUIRE A CAT 6 CABLE, TERMINATED IN A FACE PLATE, LOCATED AS INDICATED ON THE DRAWINGS. CABLE AND FACE PLATES SHALL BE LABELED WITH ROOM NUMBER.
   - 1.3. PATCH PANELS AND CABLES SHALL BE ELECTRONICALLY LABELED WITH ROOM NUMBER FOR FUTURE USE.
   - 1.4. DOCUMENT PACKAGE WILL BE REQUIRED AND SHALL INCLUDE FLOOR PLANS, CABLE SCHEDULE, LABELED LOCATIONS AND TEST RESULTS.
2. SECURITY SYSTEM.
   - 2.1. PROVIDE (1) CONTROL PANEL WITH KEYPAD THAT HAS CAPACITY FOR EXTENDED ZONE MODULES AND CAPABILITY TO BYPASS ZONES OR UTILIZE TIME DELAY.
   - 2.2. PROVIDE DOOR CONTACTS AT EXTERIOR DOORS.
   - 2.3. PROVIDE MOTION DETECTORS IN FIRST FLOOR CORRIDORS TO MONITOR WINDOW ACCESS.
   - 2.4. PROVIDE COMPLETE ALARM SYSTEM PACKAGE WITH TRAINING, SUPPORT AND MONTHLY MONITORING PROPOSAL.
   - 2.5. DETEX EAX-500 ALARM SYSTEM TO BE INSTALLED ON ALL EXTERIOR DOORS WITH THE EXCEPTION OF MAIN FRONT DOORS.
   - 2.6. MAIN EXTERIOR DOOR TO HAVE CAMERA/SPEAKER TALK SYSTEM THAT ALLOWS ADMINISTRATION TO COMMUNICATE WITH VISITORS.
3. CCTV.
   - 3.1. PROVIDE A COMPLETE SYSTEM WITH CAMERA HARDWARE, WIRING, MONITOR AND INSTALLED SOFTWARE. TRAINING WILL BE REQUIRED. EQUAL TO HONEYWELL FUSION DVR SERIES.
   - 3.2. CAMERAS SHALL BE COLOR, MOTION ACTIVATED WITH REMOTE VIEWING AND A MONITOR PROVIDED IN THE I.T. AREA. CAMERA SHALL ALSO HAVE ZOOM AND PAN FEATURES WITH A MODERATE TO HIGH RESOLUTION TO BE ABLE TO VIEW FACIAL FEATURES ON VIDEO.
   - 3.3. PROVIDE (14) DAY STORAGE CAPABILITY WITH AUTOMATIC ROLLOVER.
   - 3.4. CAMERAS SHALL BE CEILING MOUNTED AND SHALL COVER ALL EXIT/ENTRANCES, STAIRWELLS, CORRIDORS, MULTIPURPOSE ROOM AND EXTERIOR PLAY/GATHERING AREAS.
   - 3.5. DEDICATED MONITOR TO BE PROVIDED AND LOCATED IN ADMINISTRATION AREA. COORDINATE WITH OWNER.
4. PAGING SYSTEM.
   - 4.1. PAGING SYSTEM SHALL CONNECT THE ADMINISTRATION AREA WITH ALL STUDENT OCCUPIED AREAS.
   - 4.2. ALL CALL PAGING MAY UTILIZE A SEPARATE SYSTEM WITH INDIVIDUALLY WIRED CEILING SPEAKERS.
   - 4.3. SPEAKERS ARE REQUIRED IN ALL CLASSROOMS, GROUPED RESTROOMS, CORRIDORS, MULTIPURPOSE ROOMS AND EXTERIOR PLAY AREAS.
   - 4.4. SPEAKERS SHALL BE WIRED TO AMPLIFIERS IN THE IT ROOM AND TO THE ALL CALL MICROPHONE OR THRU PHONE HANDSET IN THE ADMINISTRATION AREA.
   - 4.5. (2) WIRELESS MICROPHONES WILL BE REQUIRED FOR DISMISSALS.
   - 4.6. PA SYSTEM SHALL BE MULTI-ZONED. ONE FOR MULTIPURPOSE ROOM AND ONE OR MORE FOR THE BALANCE OF THE FACILITY.
   - 4.7. ALL CLASSROOMS, MINI CLASSROOMS, TEACHER ROOMS, RESOURCE ROOMS, SPECIALTY CLASSROOMS, AND MULTI-PURPOSE ROOMS SHALL RECEIVE PA SYSTEM COMMUNICATION CAPABILITY.
   - 4.8. PA SYSTEM SHALL INTEGRATE THROUGH THE SCHOOL'S PHONE SYSTEM THROUGH "STATION PORT."
5. BELL SYSTEM.
   - 5.1. BELL SYSTEM IS THROUGH THE SPEAKERS PROVIDED ABOVE AND REQUIRES A MINIMUM OF (6) PROGRAMMABLE ZONES.
   - 5.2. CLOCKS SHALL BE PROVIDED IN EVERY CLASSROOM, SPECIALTY ROOM, CAFETERIA GYM, ADMIN AREA, AND CONTROLLED BY A MASTER CLOCK. A WIRELESS CLOCK SYSTEM CONTROLLED BY A MASTER CLOCK MAY BE UTILIZED.
   - 5.3. CLOCK/BELL SYSTEM SHALL BE INTERCONNECTED.

VOICE/DATA GENERAL NOTES

1. IT ROOM:
   - 1.1. IT ROOM WILL BE DESIGNED BY OWNER TO INCLUDE CABLE TRAYS AND FLOOR MOUNTED EQUIPMENT RACKS.
   - 1.2. PROVIDE TWO POST RACKS FOR PATCH PANELS AS NEEDED.
   - 1.3. (1) TWO POST OR FOUR POST RACK WILL BE NEEDED TO MOUNT EQUIPMENT. A TWO POST RACK WILL REQUIRE (8) SHELVES.
   - 1.4. CAT 6 CABLE TO BE STANDARD.
2. GENERAL.
   - 2.1. PROVIDE ALL STRUCTURED CABLING.
   - 2.2. (3) COPIES OF LOW VOLTAGE SYSTEMS DOCUMENTATION PACKAGE WILL BE REQUIRED.
   - 2.3. T1 OR ISDN PRI LINE SPLIT BETWEEN VOICE AND DATA FUNCTIONS AS NEEDED.
   - 2.4. TWO WAY VOICE/COMMUNICATION CAPABILITY SHALL BE PROVIDED FOR ALL CLASSROOMS, TEACHER ROOMS, RESOURCE ROOMS, SPECIALTY CLASSROOMS, MULTIPURPOSE ROOMS AND SERVING KITCHEN. THRU PHONE HANDSETS SHALL BE UTILIZED IN CLASSROOMS.
   - 2.5. VOICE ACCESS IN THE CLASSROOMS WILL BE LIMITED TO THE SMART BOARD.
   - 2.6. TEACHER WORK ROOMS AND OFFICES WILL REQUIRE OUTSIDE VOICE ACCESS.
   - 2.7. PROVIDE AND INSTALL 3-PORT DATA IN THE PRINCIPAL, AP, BA, AND REGISTRAR LOCATIONS.

RGD
CONSULTING ENGINEERS
MECHANICAL | ELECTRICAL | PLUMBING | FIRE PROTECTION | STRUCTURAL
www.rgdengineers.com
MADE IN THE USA
8232 INDIANTOWN RD. SUITE 104, JUPITER, FL 33478 (561) 741-0161
These Drawings are NOT VALID for use purposes which require the original signature and seal of the engineer unless the original signature and seal are affixed. Drawings are signed and sealed by the engineer shall not be submitted in any software or used for use purposes where signed and sealed documents are required.

RYAN D. MORRIS
FLORIDA P.E. NO. 75458
ELECTRICAL ENGINEER
CERT OF AUTH 6464
DATE 9.19.2014

HARVARD • JOLLY
ARCHITECTURE
Ft. Lauderdale 954-566-7910
Ft. Myers 239-275-7774
Jacksonville 904-396-3300
Ocala 352-622-7227
Punta Gorda 941-575-0423
St. Petersburg 727-896-4611
Tampa 813-286-8000
Wauchula Branch 941-478-4457
AA0003119
www.harvardjolly.com
WEST PALM BEACH, FL.

NEW CLASSROOM BUILDING
RIVIERA BEACH MARITIME ACADEMY
RIVIERA BEACH, FLORIDA
CONTRUCTION DOCUEMENTS

Comm. No:	214031.00
Date:	09-24-14
Drawn:	RGD
Revised:	

copyright 2014

E0.2

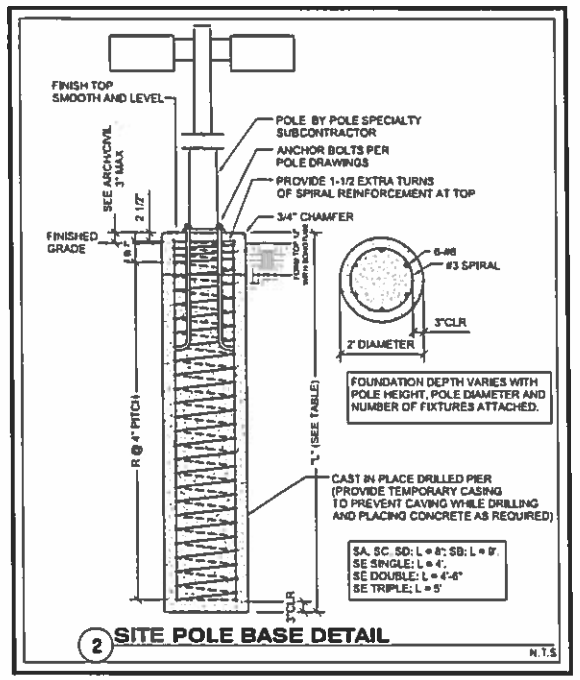

2 SITE POLE BASE DETAIL

LIGHT FIXTURE SCHEDULE

FIXTURE DESIGNATION	MANUFACTURER	CATALOG NO.	MOUNTING	LAMPS NO.	LAMPS WATTS	LAMPS TYPE	VOLTS	REMARKS
FA	COOPER	MSA-150-MP-AIT-4S-FG	POLE	1	150	MH	277	
SA	COOPER	VXM-400-MP-AIT-SS/ MOUNTED AT 25' AFG	POLE	1	400	MH	277	

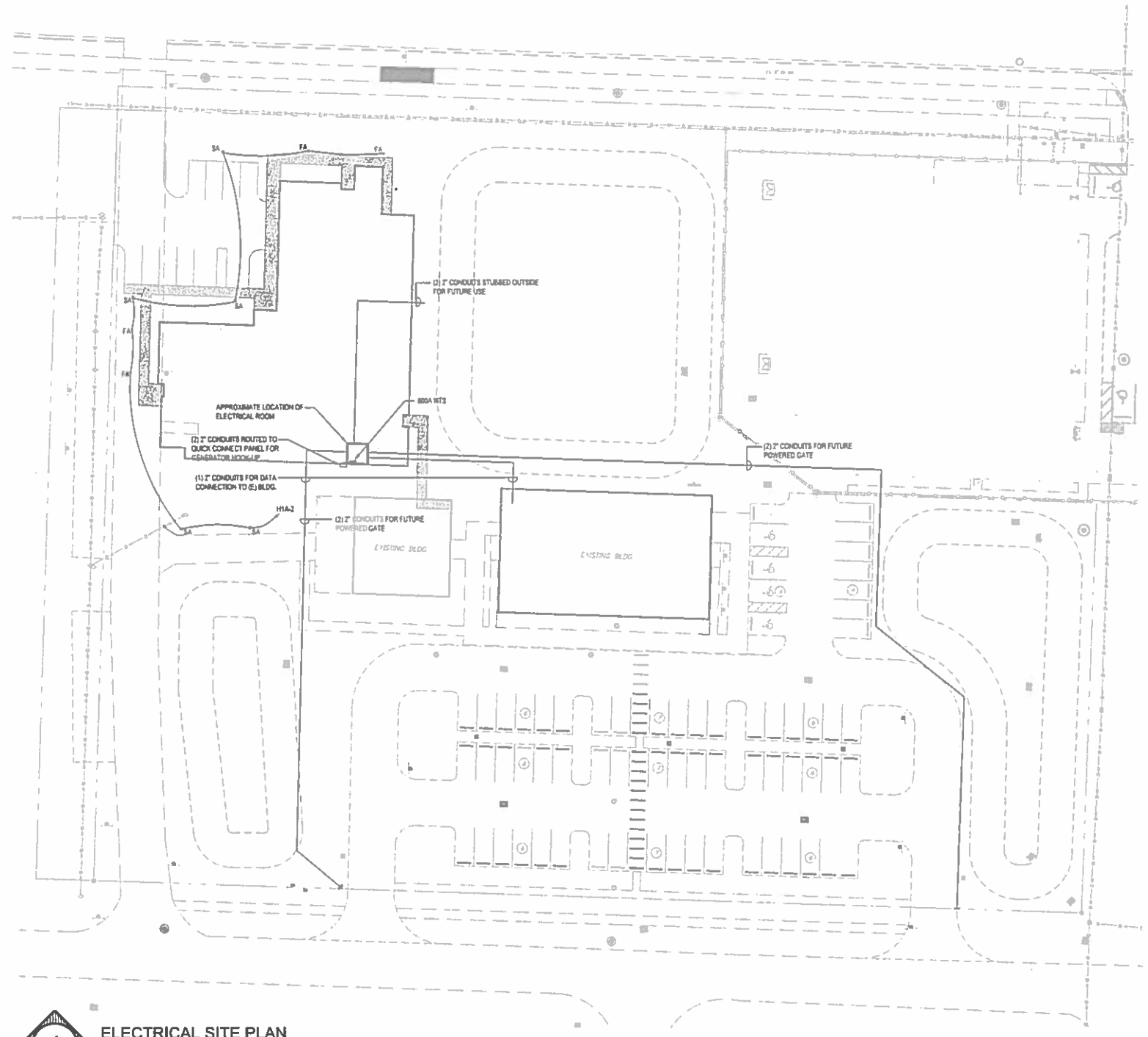

1 ELECTRICAL SITE PLAN

SCALE: 1/32" = 1'-0"

RGD
CONSULTING ENGINEERS
MECHANICAL | ELECTRICAL | PLUMBING | FIRE PROTECTION | STRUCTURAL
www.rgdengineers.com
MAIN PH 561 863 9868
1212 INDIANTOWN RD. SUITE 104, JUPITER, FL 33458 (561) 743-0865
These Drawings are NOT VALID for use purpose which requires the original signature and seal of the engineer unless the original signature and seal are affixed.
Drawings not signed and sealed by the engineer shall not be submitted to any authority or used for any purpose where signed and sealed documents are required.

RYAN D. MORRIS
FLORIDA P.E. NO. 76458
ELECTRICAL ENGINEER
CERT OF AUTH 5464
DATE 9.29.2014

HARVARD•JOLLY
ARCHITECTURE

Ft. Lauderdale 954-486-7910
Ft. Myers 239-275-7774
Jacksonville 904-399-3300
Orlando 407-677-7777
Punta Gorda 941-575-0403
St. Petersburg 727-896-4611
Tampa 813-286-8200
West Palm Beach 561-478-9457
AA:C000119
www.harvardjolly.com
WEST PALM BEACH, FL.

NEW CLASSROOM BUILDING
RIVIERA BEACH MARITIME ACADEMY
RIVIERA BEACH, FLORIDA
CONTRUCTION DOCUEMENTS

Comm. No:	214031.00
Date:	09-24-14
Drawn:	RGD
Revised:	

copyright 2014

E0.3

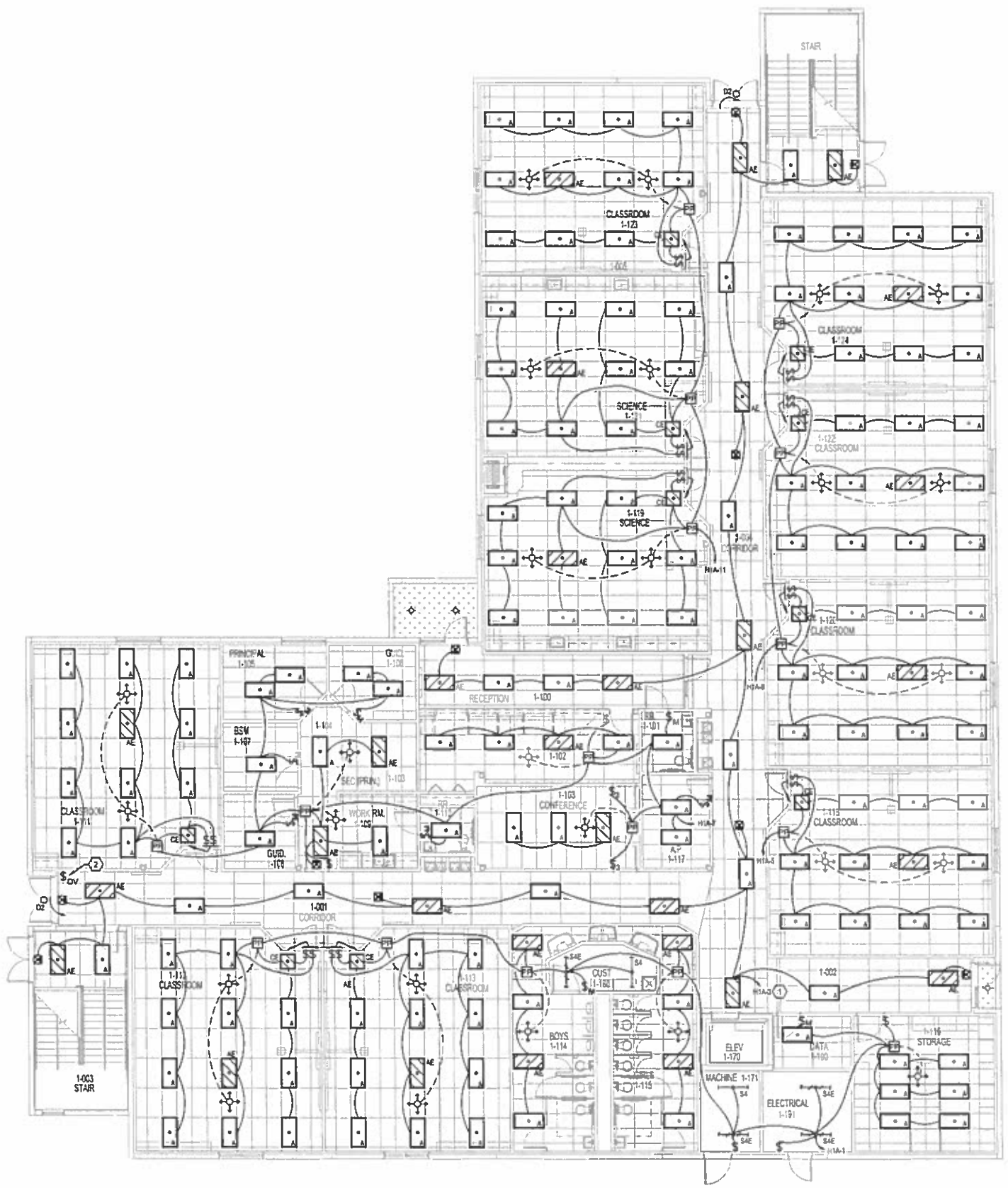

1 ELECTRICAL 1ST FLOOR LIGHTING PLAN

SCALE: 1/8" = 1'-0"

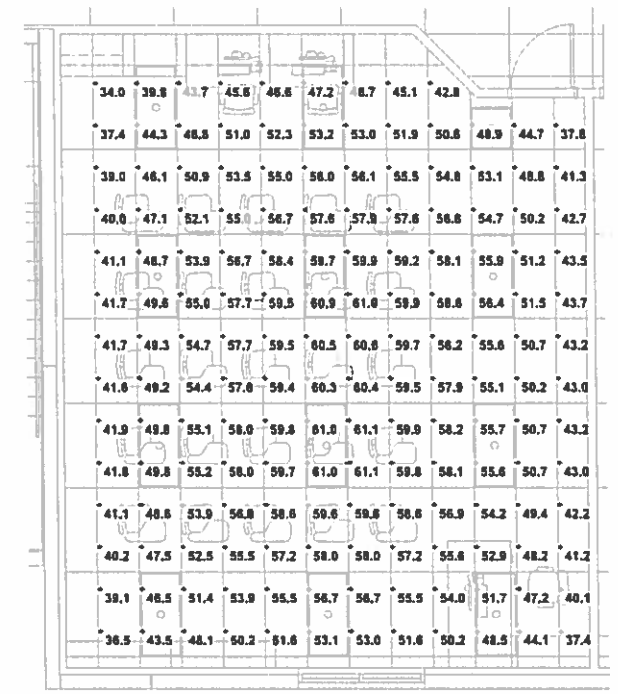

2 TYPICAL CLASSROOM PHOTOMETRIC PLAN

SCALE: 1/4" = 1'-0"

LIGHT FIXTURE SCHEDULE

FIXTURE DESIGNATION	MANUFACTURER	CATALOG NO.	MOUNTING	LAMPS NO.	LAMPS WATTS	LAMPS TYPE	VOLTS	REMARKS
A	METALUX	2GR8-232A125-UNV-EB81-U	RECESSED	2	32	T8	120/277	
AE	METALUX	2GR8-232A125-UNV-EL-EB81-U	RECESSED	2	32	T8	120/277	INCLUDES EM BACKUP BATTERY BALLAST
C	METALUX	2GR8-2U8T8A125-UNV-EB81-U	RECESSED	2	32	U6T8	120/277	
CE	METALUX	2GR8-2U8T8A125-UNV-EL-EB81-U	RECESSED	2	32	U6T8	120/277	INCLUDES EM BACKUP BATTERY BALLAST
S4	METALUX	8SF-232-UNV-EB81-U	SURFACE	2	32	T8	120/277	
S4E	METALUX	8SF-232-UNV-EL4-EB81-U	SURFACE	2	32	T8	120/277	INCLUDES EM BACKUP BATTERY BALLAST
⊗	SURELITE	AP70R	WALL/ CEILING/ END	1	3.8	LED	120/277	EXIT SIGN: FACES/CHEVRONS AS REQUIRED.

ELECTRICAL KEY NOTES

1. CIRCUIT CONTROLLED BY LIGHTING CONTACTOR. PROVIDE UNSWITCHED HOT FOR EXIT SIGNS AND EMERGENCY LIGHT FIXTURES.
2. SWITCH FOR OVERRIDE CONTROL. EXTEND TO FIRST FLOOR LIGHTING CONTACTOR IN MAIN ELECTRIC ROOM.
3. INTERLOCK EXHAUST FAN WITH CORRESPONDING LIGHTING CIRCUIT VIA RELAY.

RGD
CONSULTING ENGINEERS
MECHANICAL | ELECTRICAL | PLUMBING | FIRE PROTECTION | STRUCTURAL
www.rgdengineers.com
MAPLE PA, PA USA
1212 INDIANTOWN RD. JUPITER, FL 33478 (561) 575-0245
These Drawings are NOT VALID for any purpose which requires the original signature and seal of the engineer unless the original signature and seal are affixed. Drawings not signed and sealed by the engineer shall not be submitted to any authority or used for any purpose where signed and sealed documents are required.

RYAN D. MORRIS
FLORIDA P.E. NO. 76456
ELECTRICAL ENGINEER
CERT OF AUTH 8456
DATE 9.19.2014

HARVARD•JOLLY
ARCHITECTURE

Ft. Lauderdale 954-486-7910
Ft. Myers 239-275-7774
Jacksonville 904-398-3300
Orlando 407-647-7777
Punta Gorda 941-575-0403
St. Petersburg 727-896-4811
Tampa 813-286-8205
West Palm Beach 561-478-4457
AA0200119
www.harvardjolly.com
WEST PALM BEACH, FL

NEW CLASSROOM BUILDING
RIVIERA BEACH MARITIME ACADEMY
RIVIERA BEACH, FLORIDA
CONTRUCTION DOCUEMENTS

Comm. No: 214031.00
Date: 09-24-14
Drawn: RGD
Revised:

copyright 2014

E1.1

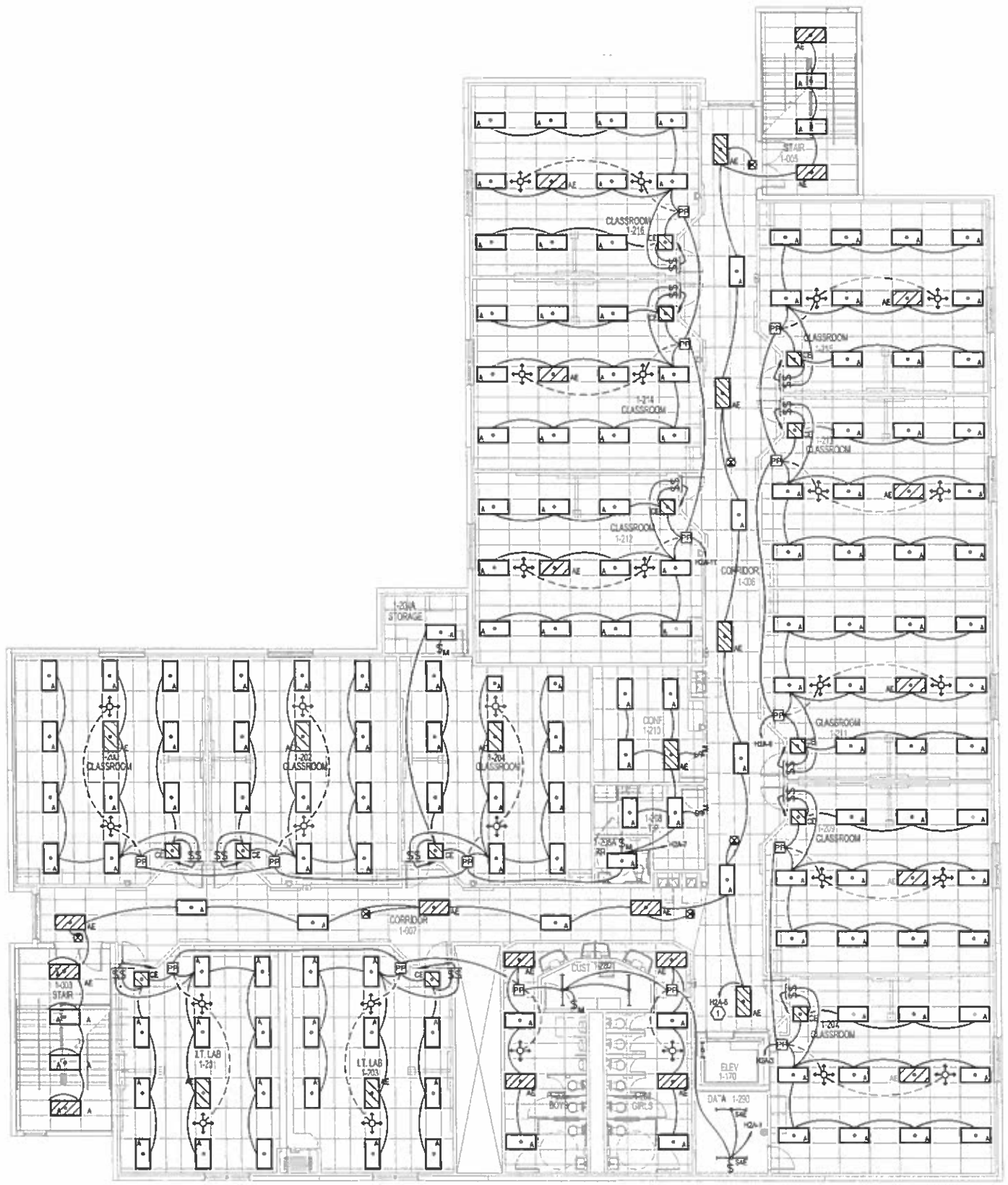

1 ELECTRICAL 2ND FLOOR LIGHTING PLAN

SCALE: 1/8" = 1'-0"

ELECTRICAL KEY NOTES

1. CIRCUIT CONTROLLED BY LIGHTING CONTACTOR. PROVIDE UNSWITCHED HOT FOR EXIT SIGNS AND EMERGENCY LIGHT FIXTURES.
2. INTERLOCK EXHAUST FAN WITH CORRESPONDING LIGHTING CIRCUIT VIA RELAY.

RGD
CONSULTING ENGINEERS
MECHANICAL | ELECTRICAL | PLUMBING | FIRE PROTECTION | STRUCTURAL
www.rgdengineers.com
MADE IN THE USA
1232 INDIANTOWN RD. SUITE 104, JUPITER, FL 33458 (561) 743-0161
These Drawings are NOT VALID for any purpose which requires the original signature and seal of the engineer unless the original signature and seal are offered. Drawings are signed and sealed by the engineer shall not be substituted in any authority or used for any purpose where signed and sealed documents are required.

RYAN D. MORRIS
FLORIDA P.E. NO. 75458
ELECTRICAL ENGINEER
CERT OF AUTH 5454
DATE 9.19.2014

HARVARD•JOLLY
ARCHITECTURE

Ft. Lauderdale 954-486-7910
Ft. Myers 239-275-7774
Jacksonville 904-396-3300
Orlando 407-867-7777
Punta Gorda 941-575-0403
St. Petersburg 727-896-4611
Tampa 813-286-8206
West Palm Beach 561-478-4457
AAC000119
www.harvardjolly.com
WEST PALM BEACH, FL.

NEW CLASSROOM BUILDING
RIVIERA BEACH MARITIME ACADEMY
RIVIERA BEACH, FLORIDA
CONTRUCTION DOCUEMENTS

Comm. No:	214031.00
Date:	09-24-14
Drawn:	RGD
Revised:	

copyright 2014

E1.2

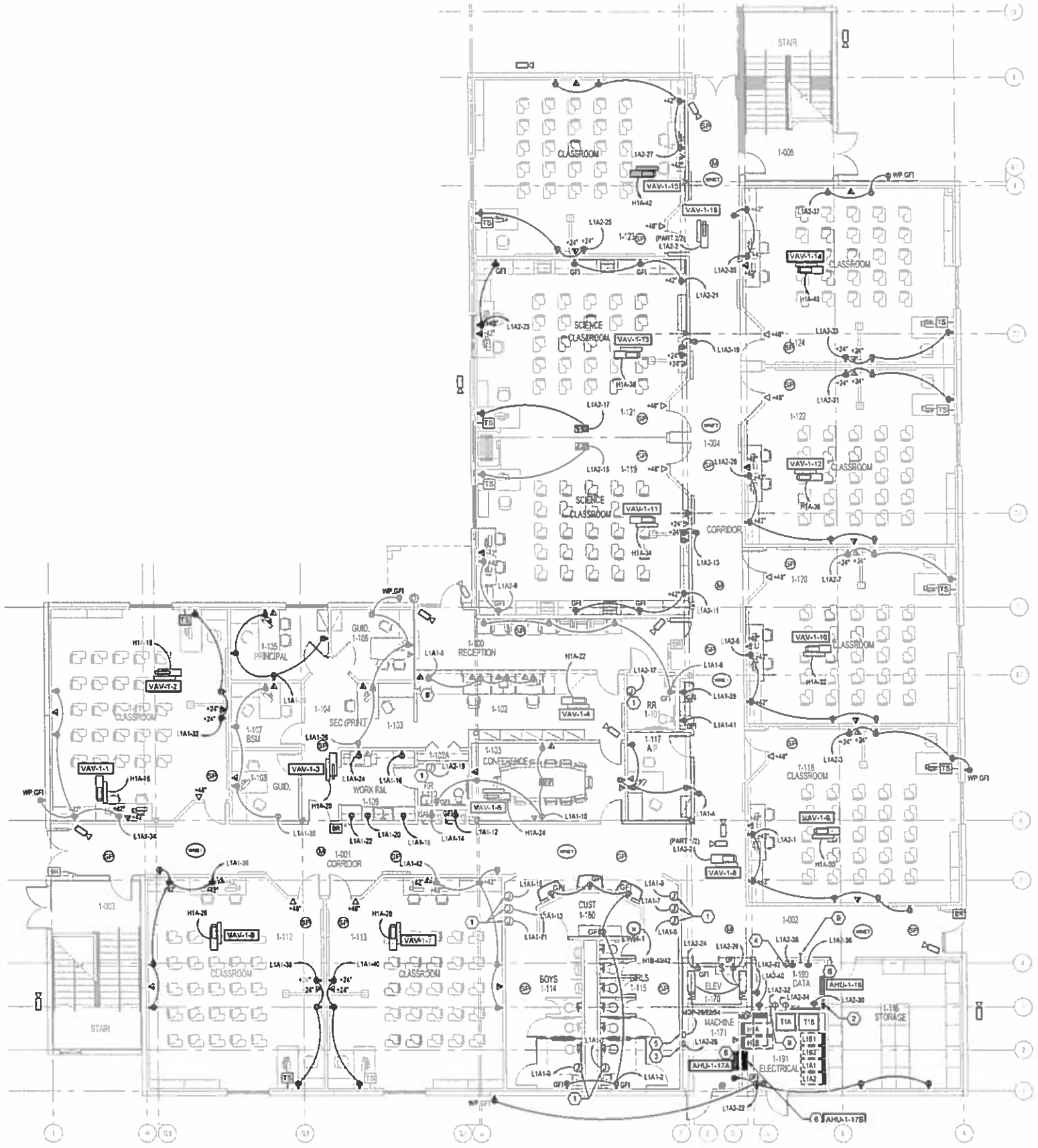

1 ELECTRICAL 1ST FLOOR POWER PLAN

SCALE: 1/8" = 1'-0"

ELECTRICAL KEY NOTES

1. CIRCUIT FOR HAND DRYERS.
2. (2) 4" CONDUITS FOR TELEPHONE PRIMARY CABLES AND (1) 2" CONDUIT FOR DATA CABLES. PROVIDE 3/4" FIRE RETARDANT PLYWOOD BACKBOARD ON 3 WALLS (FLOOR TO CEILING) WITH GROUND BUSBAR AND #6 GROUND TO BUILDING GROUND SYSTEM.
3. 2P-30/F20SS FOR ELEVATOR CAB LIGHT CIRCUIT.
4. COORDINATE RECEPTACLE PLACEMENT IN THE I.T. ROOM WITH EQUIPMENT TO BE SERVED.
5. 3P-60/F60SS FOR ELEVATOR MOTOR. COORDINATE EXACT REQUIREMENTS WITH ELEVATOR PROVIDED. INCLUDING OVERCURRENT PROTECTIVE DEVICES, DISCONNECTS, WIRING, AND CONDUIT TO MEET MANUFACTURER SPECIFICATIONS.
6. PROVIDE 1/2" CONDUIT WITH PULL STRING, ROUTED TO CORRESPONDING CONDENSING UNIT FOR LOW VOLTAGE CONTROL WIRE.
8. AIPHONE: PROVIDE 1/2" CONDUIT WITH PULL STRING FROM EXTERIOR DOOR TO RECEPTION. COORDINATE BOTH LOCATIONS WITH OWNER.
9. (4) - 4" SLEEVES FOR VOICE/DATA AND SYSTEMS CABLING.

HARVARD • JOLLY
ARCHITECTURE

Ft. Lauderdale 954-486-7910
Ft. Myers 239-275-7774
Jacksonville 904-398-3300
Orlando 407-677-7727
Punta Gorda 941-575-0403
St. Petersburg 727-896-4611
Tampa 813-286-8206
West Palm Beach 561-478-4457
AAC000119
www.harvardjolly.com
WEST PALM BEACH, FL.

NEW CLASSROOM BUILDING
RIVIERA BEACH MARITIME ACADEMY
RIVIERA BEACH, FLORIDA
CONTRUCTION DOCUEMENTS

Comm. No:	214031.00
Date:	09-24-14
Drawn:	RGD
Revised:	

copyright 2014

RGD
CONSULTING ENGINEERS
MECHANICAL | ELECTRICAL | PLUMBING | FIRE PROTECTION | STRUCTURAL
www.rgdengineering.com
MAIN IN THE USA
1212 INDIANTOWN RD. SUITE 104, JUPITER, FL 33478 (561) 713-0365
These Drawings are NOT VALID for any purpose which requires the original signature and seal of the engineer unless the original signature and seal are affixed. These Drawings are signed and sealed but the engineer shall not be responsible for any subsequent use and shall be responsible only for the purpose which signed and sealed documents are required.

RYAN D. MORRIS
FLORIDA P.E. NO. 75458
ELECTRICAL ENGINEER
CERT OF AUTH 5454
DATE 9.19.2014

E2.1

ELECTRICAL KEY NOTES

1. CIRCUIT FOR HAND DRYERS.
6. PROVIDE AND INSTALL 1/2" CONDUIT WITH PULL STRING, ROUTED TO CORRESPONDING CONDENSING UNIT FOR LOW VOLTAGE CONTROL WIRE.
7. FAN TO BE CONTROLLED BY THE BUILDING MANAGEMENT SYSTEM, REFERENCE MECHANICAL PLANS.
9. (4) - 4" SLEEVES FOR VOICE/DATA AND SYSTEMS CABLING.

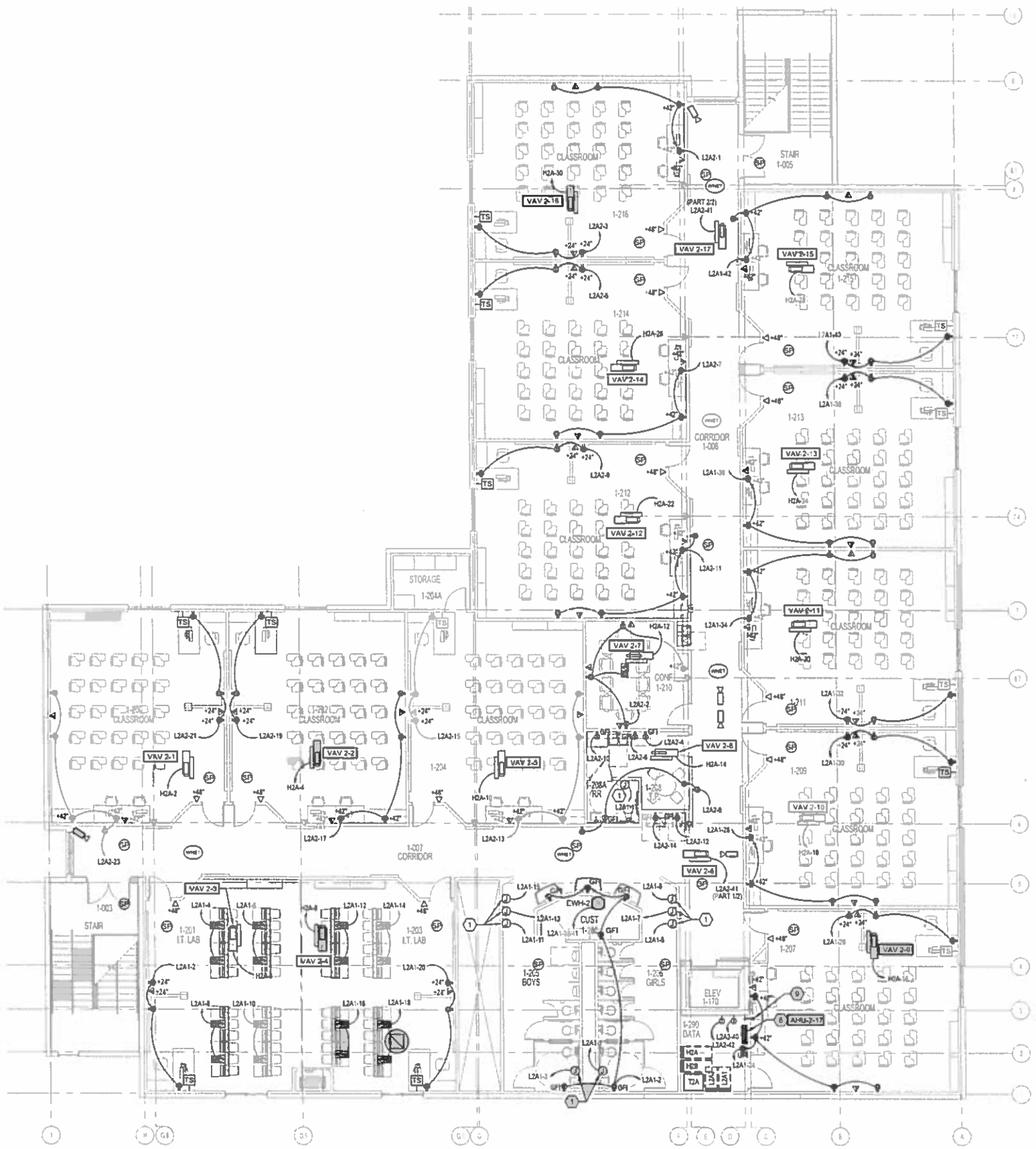

1 ELECTRICAL 2ND FLOOR & ROOF POWER PLAN

SCALE: 1/8" = 1'-0"

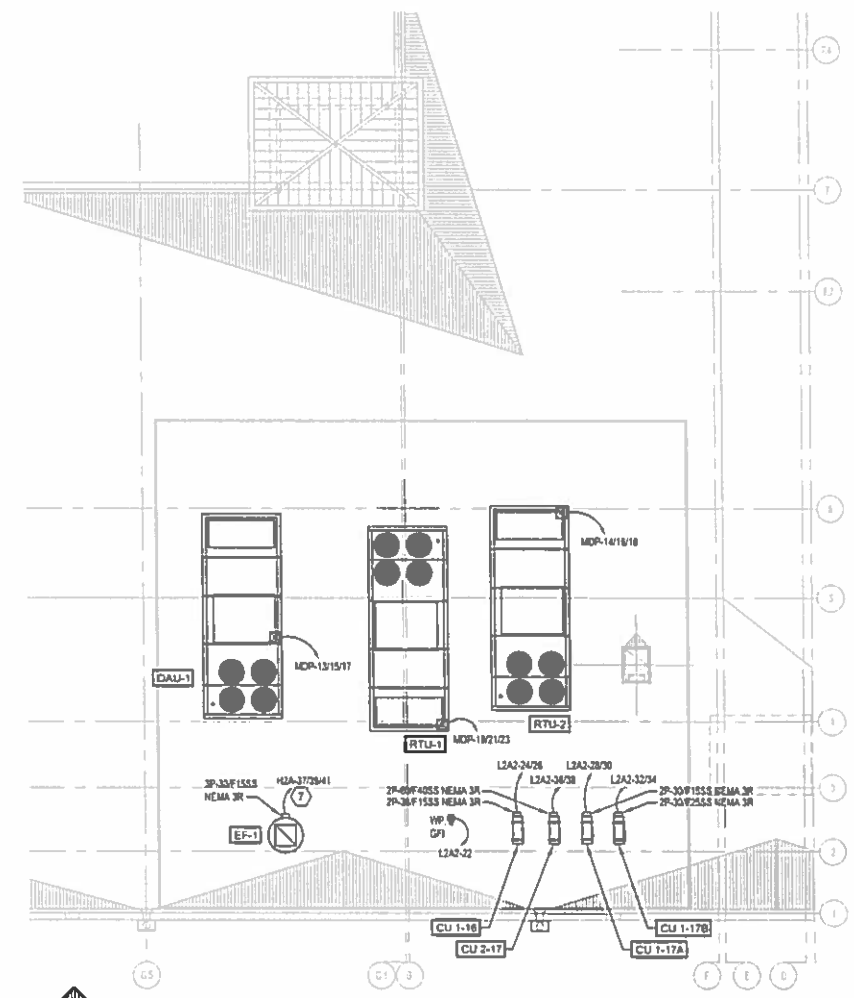

2 ELECTRICAL 2ND FLOOR & ROOF POWER PLAN

SCALE: 1/8" = 1'-0"

HARVARD•JOLLY
ARCHITECTURE

Ft. Lauderdale 954-486-7910
Ft. Myers 239-275-7774
Jacksonville 904-398-3300
Orlando 407-422-7272
Punta Gorda 941-575-0403
St. Petersburg 727-896-4911
Tampa 813-280-8206
West Palm Beach 561-478-4457
AAC000119
www.harvardjolly.com
WEST PALM BEACH, FL.

NEW CLASSROOM BUILDING
RIVIERA BEACH MARITIME ACADEMY
RIVIERA BEACH, FLORIDA
CONTRUCTION DOCUEMENTS

Comm. No:	214031.00
Date:	09-24-14
Drawn:	RGD
Revised:	

copyright 2014

RGD
CONSULTING ENGINEERS
AREA CODE 904 | ELECTRICAL | PLUMBING | FAX 7500167 | STATE FL
www.rgdengineers.com
MADE IN THE USA
1112 PRIMANTOWN RD. SUITE 104, JUPITER, FL 33458 (561) 743-8165
These Drawings are NOT VALID for any purpose which requires the original signature and seal of the engineer unless the original signature and seal are affixed. Drawings are signed and sealed by the engineer shall not be submitted to any authority at and for any purpose where signed and sealed documents are required.
RYAN D. MORRIS
FLORIDA P.E. NO. 78458
ELECTRICAL ENGINEER
CERT OF AUTH 5454
DATE 9.19.2014

E2.2

FIRE ALARM NOTES

1. THE SYSTEM SHALL BE AN ADDRESSABLE SYSTEM.
2. A DIGITAL ALARM COMMUNICATOR TRANSMITTER SHALL TRANSMIT ALL SIGNALS TO THE REMOTE SUPERVISING STATION VIA TWO TELEPHONE LINES.
3. INITIATING DEVICE, NOTIFICATION APPLIANCE, AND SIGNALING LINE CIRCUIT PATHWAY CLASS DESIGNATIONS SHALL BE CLASS B STYLE Y.
4. PATHWAY SURVIVABILITY SHALL BE LEVEL 1.
5. SURGE PROTECTION SHALL BE PROVIDED FOR ALL FIRE ALARM LINES LEAVING THE BUILDING, INCLUDING BUT NOT LIMITED TO 120V, TELECOMM, AND DATA.
6. VISUAL NOTIFICATION DEVICES SHALL BE INSTALLED 80" A.F.F. OR 6" BELOW THE CEILING, WHICHEVER IS LOWER.
7. VISUAL NOTIFICATION DEVICES WITHIN SIGHT OF EACH OTHER SHALL BE FULLY SYNCHRONIZED.
8. MANUAL STATIONS SHALL BE INSTALLED BETWEEN 42" TO 54" A.F.F. AND WITHIN 5' OF EACH CODE REQUIRED EXIT.
9. AUDIBLE ALARMS SHALL HAVE AN OUTPUT OF AT LEAST 15 dBA ABOVE THE AMBIENT NOISE LEVEL.
10. AUDIBLE ALARMS SHALL INCLUDE MULTIPLE VOLUME WATTAGE TAPS TO ACHIEVE HIGHER LEVELS IF NECESSARY.
11. AUDIBLE ALARMS SHALL BE SPEAKER/VOICE NOTIFICATION.
12. CEILING MOUNTED SMOKE DETECTORS SHALL BE LOCATED NOT LESS THAN 4" FROM A SIDEWALL.
13. FIRE ALARM CONTROL PANEL SHALL BE POWER LIMITED.
14. THE FIRE ALARM CONTROL PANEL SHALL BE A FED FROM A DEDICATED 1P-20A BRANCH CIRCUIT. THE CIRCUIT SHALL BE LABELED IN RED "FIRE ALARM CIRCUIT." IF EMERGENCY CIRCUITS ARE AVAILABLE, THE SYSTEM SHALL BE FED FROM THE EMERGENCY SYSTEM.
15. ALL WIRING USED SHALL BE APPROVED FOR EACH APPLICATION.
16. THE SECONDARY POWER SUPPLY SHALL HAVE SUFFICIENT CAPACITY TO OPERATE THE FIRE ALARM SYSTEM IN NON-ALARM CONDITION FOR A MINIMUM OF 24 HOURS, AND AT THE END OF THAT PERIOD SHALL BE CAPABLE OF OPERATING ALL ALARM NOTIFICATION APPLIANCES FOR 5 MINUTES.
17. AN INSTALLATION AND USER MANUAL SHALL BE MAINTAINED AT THE MAIN FIRE ALARM CONTROL PANEL.
18. THE CONTRACTOR SHALL SUBMIT A DETAILED SET OF SHOP DRAWINGS, WIRING DIAGRAMS, FLOORPLAN DRAWINGS WITH ALL DEVICE LOCATIONS, VOLTAGE DROP CALCULATIONS, BATTERY CALCULATIONS, CUT SHEETS, AND DETAILS AT THE TIME OF SUBMISSION FOR PERMIT.
19. THE SYSTEM SHALL BE MONITORED OFF-SITE BY A LISTED SUPERVISING STATION.

FIRE ALARM SYMBOL LEGEND

	PHOTOELECTRIC SMOKE DETECTOR
	DUCT SMOKE DETECTOR
	FIRE ALARM STROBE - CANDELA AS INDICATED
	FIRE ALARM COMBINATION SPEAKER/STROBE - CANDELA AS INDICATED
	FIRE ALARM MANUAL PULL STATION
	SPRINKLER WATER FLOW DETECTOR
	SPRINKLER VALVE TAMPER SWITCH
	FIRE ALARM SPEAKER
	FIXED TEMPERATURE HEAT DETECTOR
FCP	FIRE ALARM CONTROL PANEL
FSA	FIRE SYSTEM ANNUNCIATOR

NOTE: NOT ALL SYMBOLS MAY APPLY TO PLANS

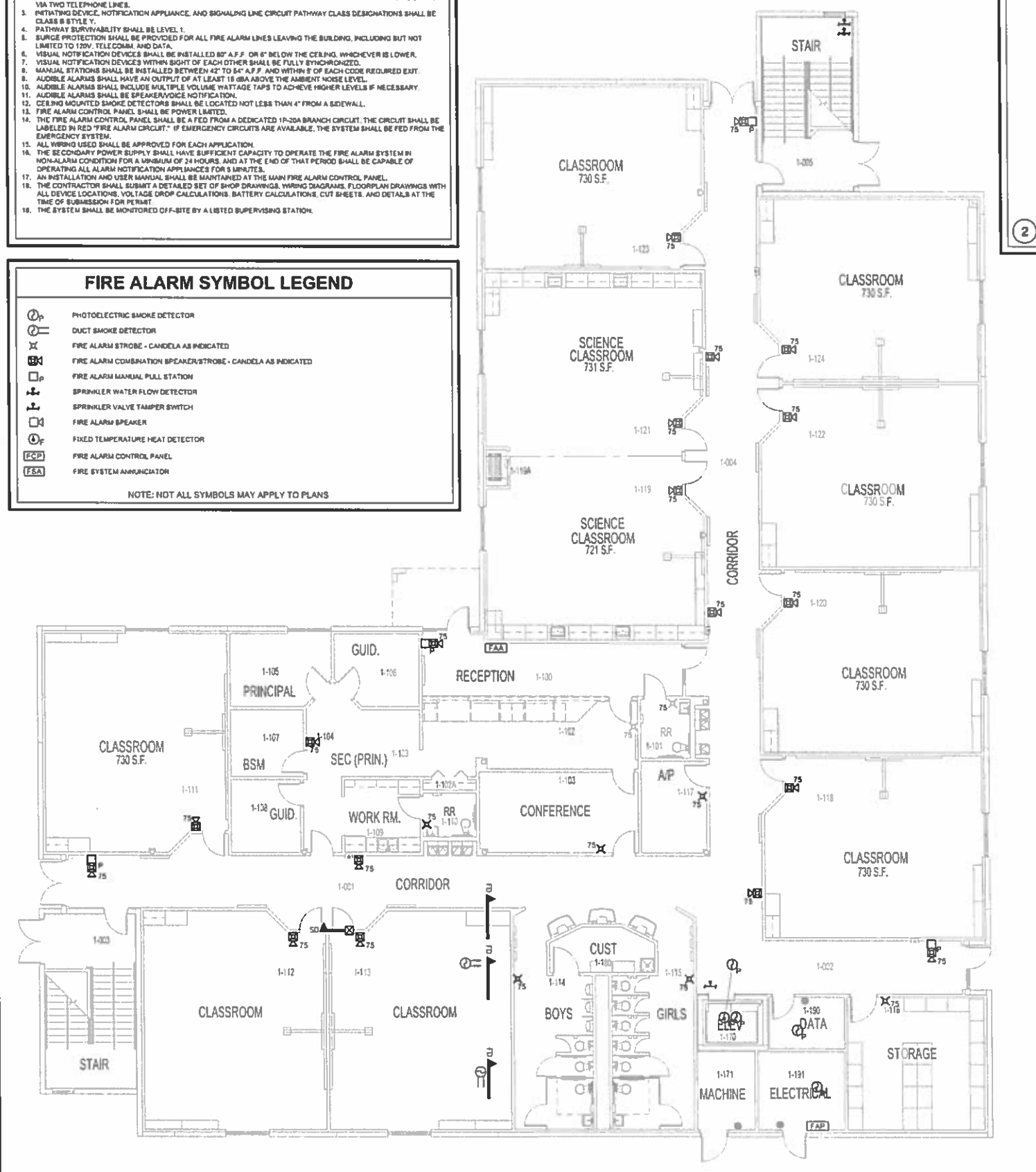

1 ELECTRICAL 1ST FLOOR FIRE ALARM PLAN

SCALE: 1/8" = 1'-0"

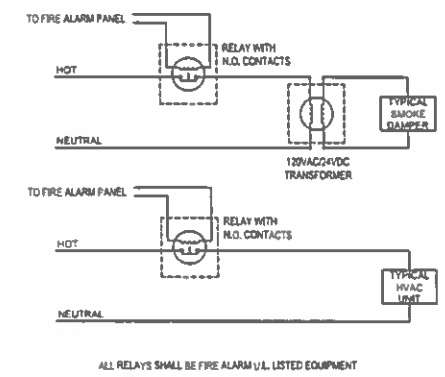

ALL RELAYS SHALL BE FIRE ALARM U.L. LISTED EQUIPMENT

2 SMOKE DAMPER & HVAC SHUTDOWN DETAIL

N.T.S

FIRE ALARM SEQUENCE OF OPERATION

1. AN ALARM CONDITION SHALL BE INITIATED BY THE FOLLOWING DEVICES:
   - 1.1. SMOKE DETECTORS
   - 1.2. MANUAL PULL STATIONS
   - 1.3. HEAT DETECTORS
   - 1.4. AUTOMATIC SPRINKLER SYSTEM WATER FLOW
2. AN ALARM CONDITION SHALL INITIATE THE FOLLOWING ACTIONS:
   - 2.1. THE LOCATION OF THE INITIATING DEVICE SHALL BE INDICATED ON THE CONTROL PANEL AND REMOTE ANNUNCIATOR.
   - 2.2. ACTIVATE AUDIBLE ALARMS ON THE CONTROL PANEL AND REMOTE ANNUNCIATOR.
   - 2.3. VISUAL AND AUDIBLE ALARMS SHALL BE ACTIVATED ON ALL FLOORS.
   - 2.4. TRANSMIT AN ALARM SIGNAL TO THE REMOTE ALARM RECEIVING STATION.
   - 2.5. UNLOCK ELECTRIC DOOR LOCKS IN DESIGNATED EGRESS PATHS.
   - 2.6. RELEASE FIRE AND SMOKE DOORS HELD OPEN BY MAGNETIC DOOR HOLDERS.
3. A SUPERVISORY CONDITION SHALL BE INITIATED BY THE FOLLOWING DEVICES AND ACTIONS:
   - 3.1. TAMPER SWITCHES
   - 3.2. DUCT MOUNTED SMOKE DETECTORS
   - 3.3. USER DISABLING OF ZONES OR INDIVIDUAL DEVICES
   - 3.4. LOSS OF COMMUNICATION WITH ANY PANEL ON THE NETWORK
4. A SUPERVISORY CONDITION SHALL INITIATE THE FOLLOWING ACTIONS:
   - 4.1. THE LOCATION OF THE INITIATING DEVICE SHALL BE INDICATED ON THE CONTROL PANEL AND REMOTE ANNUNCIATOR.
   - 4.2. ACTIVATE AUDIBLE ALARMS ON THE CONTROL PANEL AND REMOTE ANNUNCIATOR.
   - 4.3. IF THE SIGNAL IS DUE TO A DUCT MOUNTED SMOKE DETECTOR, THE SIGNAL SHALL SHUT DOWN ALL HVAC EQUIPMENT ASSOCIATED WITH A COMMON PLENUM SHARED BY THE DEVICE.
   - 4.4. TRANSMIT A TROUBLE OR SUPERVISORY SIGNAL TO THE REMOTE ALARM RECEIVING STATION.
   - 4.5. TRANSMIT SYSTEM STATUS TO THE BUILDING MANAGEMENT SYSTEM.
5. A TROUBLE CONDITION SHALL BE INITIATED BY THE FOLLOWING DEVICES AND ACTIONS:
   - 5.1. OPEN CIRCUITS, SHORTS, AND GROUNDS IN DESIGNATED CIRCUITS.
   - 5.2. OPENING, TAMPERING WITH, OR REMOVING ALARM-INITIATING AND SUPERVISORY SIGNAL-INITIATING DEVICES.
   - 5.3. LOSS OF COMMUNICATION WITH ANY ADDRESSABLE SENSOR, INPUT MODULE, RELAY CONTROL MODULE, REMOTE ANNUNCIATOR, PRINTER INTERFACE, OR ETHERNET MODULE.
   - 5.4. LOSS OF PRIMARY POWER AT FIRE ALARM CONTROL UNIT.
   - 5.5. GROUND OR A SINGLE BREAK IN INTERNAL CIRCUITS OF FIRE-ALARM CONTROL UNIT.
   - 5.6. BREAK IN STANDBY BATTERY CIRCUITRY OR FAILURE OF BATTERY CHARGING.
   - 5.7. ABNORMAL POSITION OF ANY SWITCH AT FIRE-ALARM CONTROL UNIT OR ANNUNCIATOR.
   - 5.8. VOICE SIGNAL AMPLIFIER FAILURE.
6. A TROUBLE CONDITION SHALL INITIATE THE FOLLOWING ACTIONS:
   - 6.1. THE LOCATION OF THE TROUBLE CONDITION SHALL BE INDICATED ON THE CONTROL PANEL AND REMOTE ANNUNCIATOR.
   - 6.2. ACTIVATE AUDIBLE ALARMS ON THE CONTROL PANEL AND REMOTE ANNUNCIATOR.

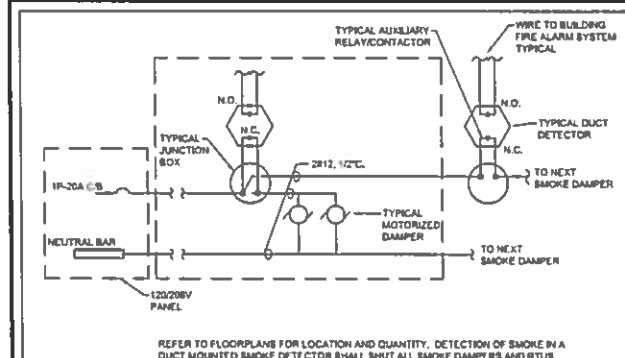

REFER TO FLOORPLANS FOR LOCATION AND QUANTITY. DETECTION OF SMOKE IN A DUCT MOUNTED SMOKE DETECTOR SHALL SHUT ALL SMOKE DAMPERS AND RTUS.

POWER SOURCE FOR SMOKE DAMPERS SHALL BE EITHER 120V OR 24V FROM THE FIRE ALARM SYSTEM. THE CONTRACTOR SHALL COORDINATE THE REQUIREMENTS.

1 SMOKE DETECTOR/SMOKE DAMPER WIRING

N.T.S

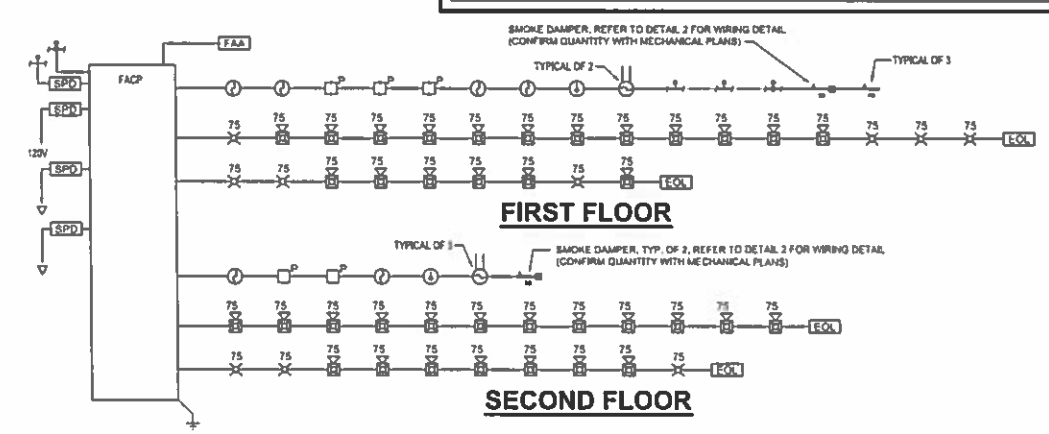

FIRE ALARM SINGLE LINE NOTES

1. THE CONTRACTOR SHALL REFER TO THE FLOORPLAN FOR EXACT QUANTITIES. THE SHOP DRAWINGS SHALL DICTATE THE MAXIMUM QUANTITY OF DEVICES PER CIRCUIT. MAC PANELS SHALL BE ADDED AS REQUIRED AND BE PART OF THE BID.

RGD
CONSULTING ENGINEERS
MECHANICAL | ELECTRICAL | PLUMBING | FIRE PROTECTION | STRUCTURAL
www.rgdengineers.com
MADE IN THE USA
8950 FOREST HILL BLVD. SUITE 104, LAKEWORTH, FL 33467 (561) 737-0144

These Drawings are NOT VALID for any purpose which requires the original signature and seal of the engineer unless the original signature and seal are affixed. Drawings not signed and sealed by the engineer shall not be submitted to any authority or used for any purpose where signed and sealed documents are required.

RYAN D. MORRIS
FLORIDA P.E. NO. 75458
ELECTRICAL ENGINEER
CERT OF AUTH 3454
DATE 9.19.2014

HARVARD•JOLLY
ARCHITECTURE
FL: Lauderdale 954-585-7910
FL: Myers 239-275-7774
Jacksonville 904-396-3300
Orlando 407-645-5277
Punta Gorda 941-575-0403
St. Petersburg 727-896-4811
Tampa 813-286-8205
West Palm Beach 561-478-4457
AA:C000119
www.harvardjolly.com
WEST PALM BEACH, FL

NEW CLASSROOM BUILDING
RIVIERA BEACH MARITIME ACADEMY
RIVIERA BEACH, FLORIDA
CONTRUCTION DOCUEMENTS

Comm. No:	214031.00
Date:	09-24-14
Drawn:	RGD
Revised:	

copyright 2014

E3.1

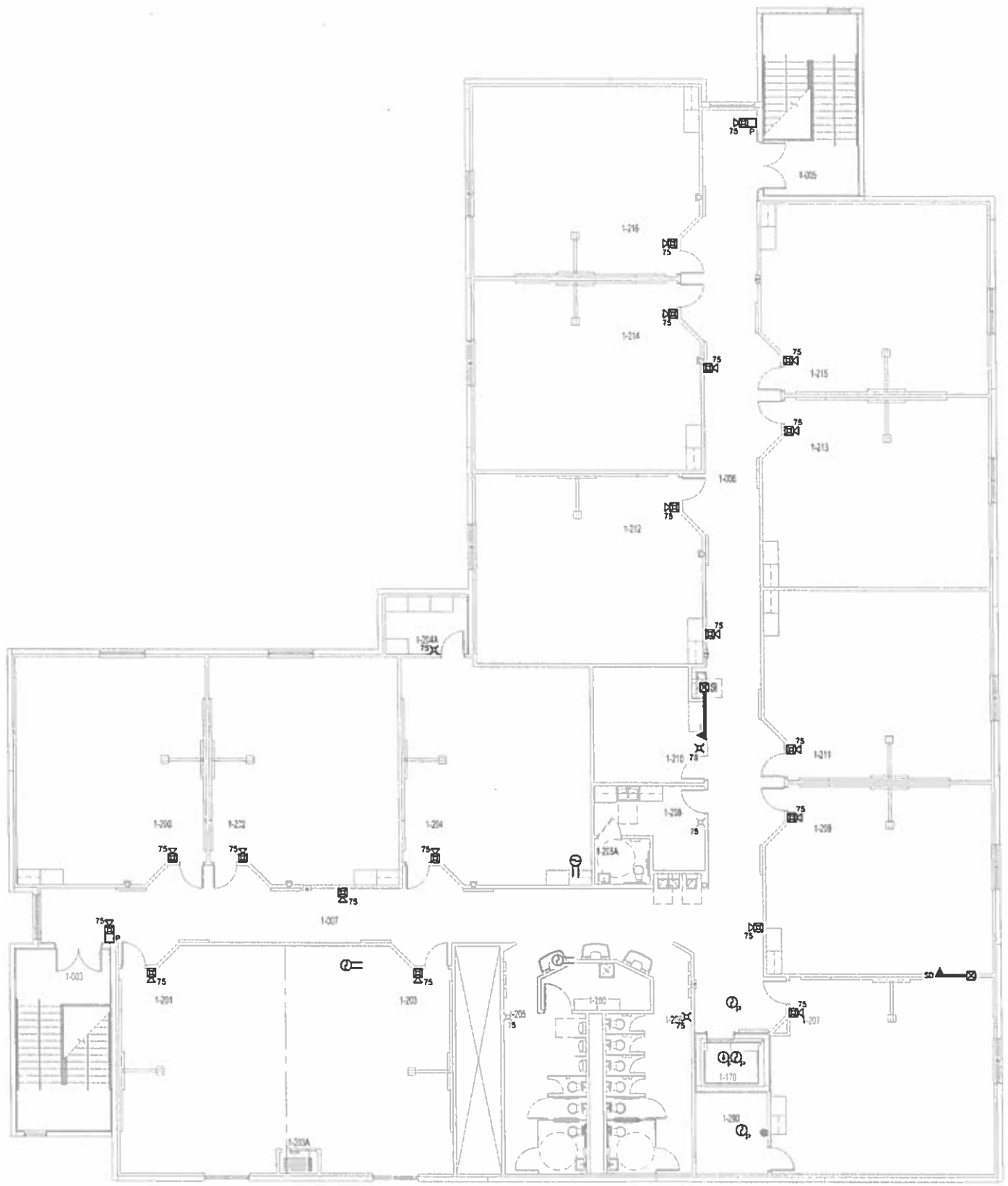

1 ELECTRICAL 2ND FLOOR FIRE ALARM PLAN

SCALE: 1/8" = 1'-0"

RGD
CONSULTING ENGINEERS
MECHANICAL | ELECTRICAL | PLUMBING | FIRE PROTECTION | STRUCTURAL
www.rgdengineers.com
MADE IN THE USA
1212 INDIAN TOWN RD. SUITE 104, JUPITER, FL 33410 (561) 743-0465

These Drawings are NOT VALID for any purpose which requires the original signature and seal of the engineer unless the original signature and seal are affixed. Drawings not signed and sealed by the engineer shall not be submitted to any authority or used for any purpose where signed and sealed documents are required.

RYAN D. MORRIS
FLORIDA P.E. NO. 76458
ELECTRICAL ENGINEER
CERT OF AUTH 5454
DATE 9.19.2014

HARVARD•JOLLY
ARCHITECTURE

Ft. Lauderdale 954-466-7910
Ft. Myers 239-275-7774
Jacksonville 904-396-3300
Orlando 407-667-7727
Punta Gorda 941-575-0403
St. Petersburg 727-895-4611
Tampa 813-288-8200
West Palm Beach 561-478-4457
AAC000119
www.HarvardJolly.com
WEST PALM BEACH, FL.

NEW CLASSROOM BUILDING
RIVIERA BEACH MARITIME ACADEMY
RIVIERA BEACH, FLORIDA
CONTRUCTION DOCUEMENTS

Comm. No:	214031.00
Date:	09-24-14
Drawn:	RGD
Revised:	

copyright 2014

E3.2

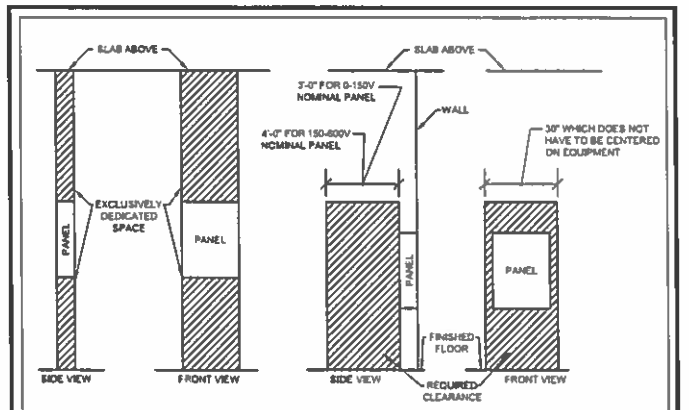

1 TYPICAL PANELBOARD REQUIRED CLEARANCE
N.T.S

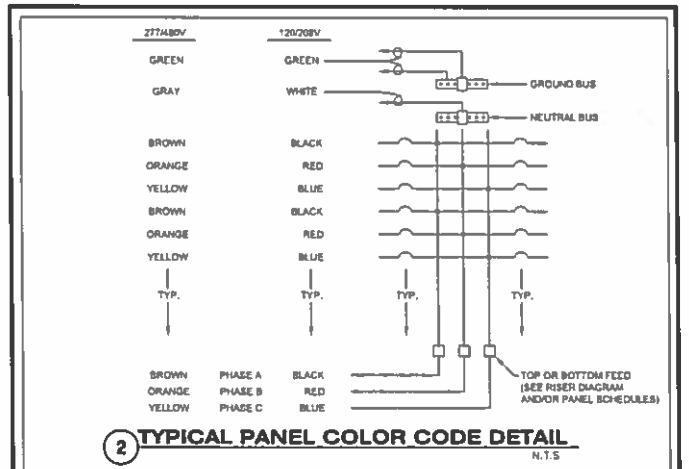

2 TYPICAL PANEL COLOR CODE DETAIL
N.T.S

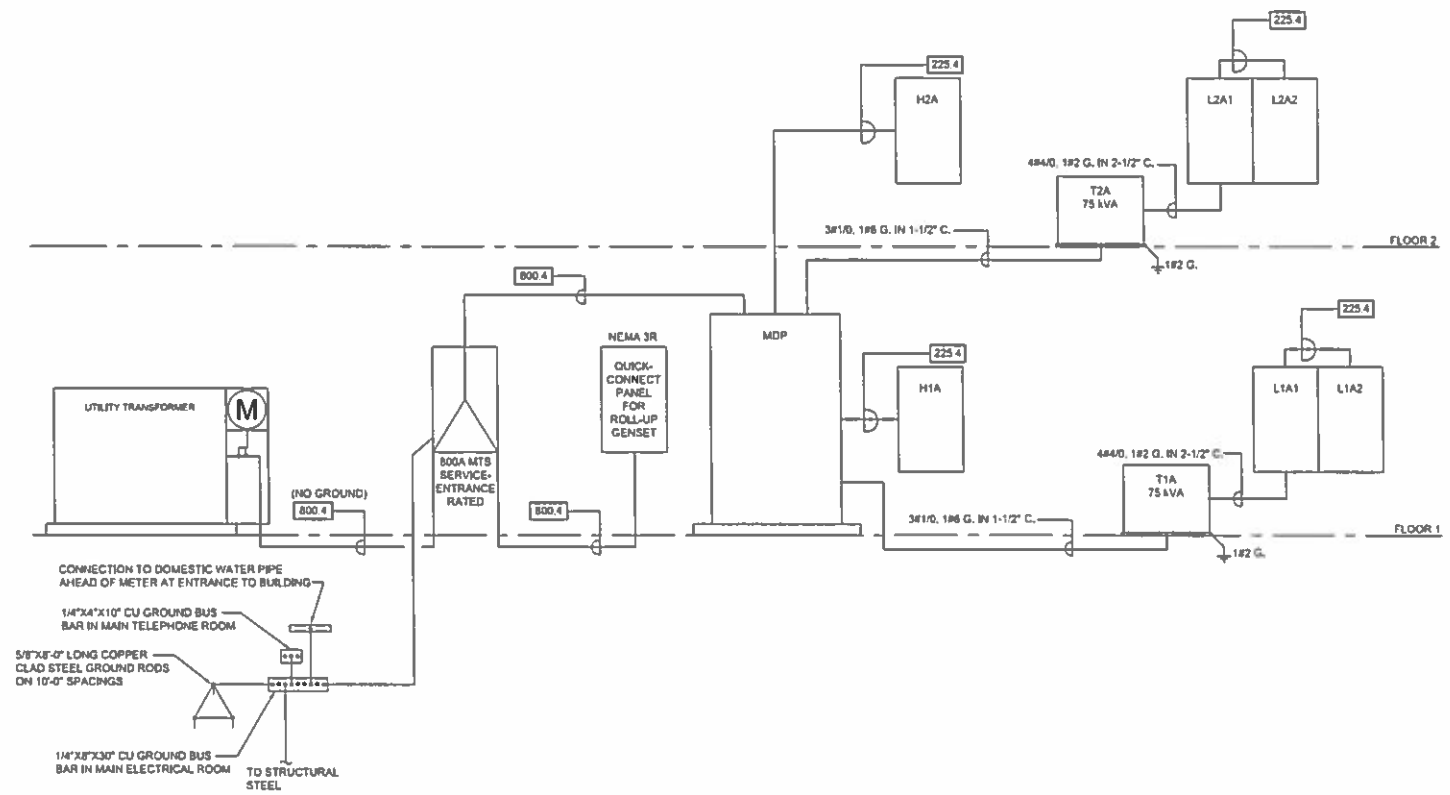

MSB LOAD ANALYSIS

CONNECTED LOAD CALCS	CONNECTED LOAD:		= 553.55 kVA
	AMPERES (480V 3Ø):		= 665.8 A
	BUILDING SQUARE FOOTAGE:		= 24,290 SQFT
	VA/SQFT:		= 22.79 VA/SQFT
SQUARE FOOT LOAD CALCS	FIRST 3 VA/SQFT @ 100%	(3*24,290)	= 72.87 kVA
	NEXT 17 VA/SQFT @ 75%	(17*24,290*0.75)	= 308.70 kVA
	REMAINDER @ 25%	(2.79*24,290*0.25)	= 16.94 kVA
TOTAL DEMAND CALCS PER NEC 220.86	TOTAL DEMAND:		= 399.51 kVA
	AMPERES (480V 3Ø):		= 480.5 A

FEEDER SIZING SCHEDULE

NUMBER	CONDUCTOR - CU	CONDUIT	CONDUCTOR - AL	CONDUIT	GROUND
225.4	4#4/0	2-1/2"	4#300 KCMIL	2-1/2"	1#4
800.4	TWO SETS 4#600 KCMIL	(2) 3-1/2"	THREE SETS 4#400 KCMIL	(3) 3"	1#1/0

ELECTRICAL NOTES

1. ALL CONNECTIONS OF THE GROUND ELECTRODE SYSTEM SHALL BE VIA #3/0 COPPER WIRES INCLUDING THE CONNECTION FROM THE MAIN DISTRIBUTION BOARD TO THE MAIN BUS GROUND BAR, COLD WATER PIPE, SUPPLEMENTAL GROUND SYSTEM, STRUCTURAL STEEL AND TELECOMM GROUND BUS BAR.
2. THE CONTRACTOR MAY SUBSTITUTE 2 SETS OF 4#3/0 WITH 1#3 G. IN 2" CONDUIT EACH FOR ALL WIRING INDICATED AS 4#600KCMIL, 1#3G. IN 4" CONDUIT.
3. WHERE POSSIBLE, THE CONTRACTOR SHALL TWIN MOUNT CIRCUIT BREAKERS WITHIN THE MAIN BOARD DISTRIBUTION SECTIONS TO MAXIMIZE SPACE FOR FUTURE EXPANSION.
4. CONTRACTOR SHALL VERIFY ALL ELECTRICAL EQUIPMENT IS COORDINATED WITH THE MANUFACTURER'S SHORT CIRCUIT AND FAULT CURRENT COORDINATION STUDY. THIS SHALL INCLUDE PANELBOARDS, DISTRIBUTION BOARDS, DISCONNECTS, ETC.

RGD
CONSULTING ENGINEERS
WWW.RGDENGINEERS.COM
MADE IN THE USA
PRINCETON'S BLD. SUITE 104, JUPITER, FL 33458
These Drawings are NOT VALID for any purpose which requires the original signature and seal of the engineer unless the original signature and seal are affixed. Drawings not signed and sealed by the engineer shall not be submitted to any authority or used for any purpose where signed and sealed drawings are required.
RYAN D. MORRIS
FLORIDA P.E. NO. 78450
ELECTRICAL ENGINEER
CERT OF AUTH 6054
DATE 9.19.2014

HARVARD•JOLLY
ARCHITECTURE
Ft. Lauderdale 954-486-7910
Ft. Myers 239-275-7774
Jacksonville 904-399-3300
Orlando 407-677-7777
Punta Gorda 941-575-0433
St. Petersburg 727-896-4611
Tampa 813-288-8206
West Palm Beach 561-478-4457
www.harvardjolly.com
AA0003119
WEST PALM BEACH, FL.

NEW CLASSROOM BUILDING
RIVIERA BEACH MARITIME ACADEMY
RIVIERA BEACH, FLORIDA
CONTRUCTION DOCUEMENTS

Comm. No:	214031.00
Date:	09-24-14
Drawn:	RGD
Revised:	

copyright 2014

E4.1

PANEL L2A1

3P-225A M.C.B.

A Ø 22.64 kVA | B Ø 20.34 kVA | C Ø 23.87 kVA | TOTAL 66.85 kVA | 186 AMPS

3 Ø 4 W 120/208 VOLT | 225 AMP BUS | BREAKER INTERRUPT RATING 10,000 A.I.C.

COND SIZE	WIRE SIZE	LOAD DESCRIPTION	kVA A Ø	kVA B Ø	kVA C Ø	C/B	CKT NO.	CKT NO.	C/B	kVA A Ø	kVA B Ø	kVA C Ø	LOAD DESCRIPTION	WIRE SIZE	COND SIZE
1/2"	2#12	HAND DRYER	1.40			1P-20	1	2	1P-20	0.90			LT. LAB RECEPTS	2#12	1/2"
1/2"	2#12	HAND DRYER		1.40		1P-20	3	4	1P-20		0.72		LT. LAB RECEPTS	2#12	1/2"
1/2"	2#12	HAND DRYER			1.40	1P-20	5	6	1P-20			0.72	LT. LAB RECEPTS	2#12	1/2"
1/2"	2#12	HAND DRYER	1.40			1P-20	7	8	1P-20	0.72			LT. LAB RECEPTS	2#12	1/2"
1/2"	2#12	HAND DRYER		1.40		1P-20	9	10	1P-20		0.72		LT. LAB RECEPTS	2#12	1/2"
1/2"	2#12	HAND DRYER			1.40	1P-20	11	12	1P-20			0.72	LT. LAB RECEPTS	2#12	1/2"
1/2"	2#12	HAND DRYER	1.40			1P-20	13	14	1P-20	0.72			LT. LAB RECEPTS	2#12	1/2"
1/2"	2#12	HAND DRYER		1.40		1P-20	15	16	1P-20		0.72		LT. LAB RECEPTS	2#12	1/2"
1/2"	2#12	HAND DRYER			1.40	1P-20	17	18	1P-20			0.72	LT. LAB RECEPTS	2#12	1/2"
		SPARE				1P-20	19	20	1P-20	0.90			LT. LAB RECEPTS	2#12	1/2"
		SPARE				1P-20	21	22	1P-20		0.84		RECEPTS / AUTOSINKS	2#12	1/2"
		SPARE				1P-20	23	24	1P-20			1.44	RECEPTS (1-207)	2#12	1/2"
		SPARE				1P-20	25	26	1P-20	0.90			RECEPTS (1-207)	2#12	1/2"
		SPARE				1P-20	27	28	1P-20		1.28		RECEPTS (1-209)	2#12	1/2"
		SPARE				1P-20	29	30	1P-20			0.90	RECEPTS (1-209)	2#12	1/2"
		SPARE				1P-20	31	32	1P-20	0.90			RECEPTS (1-211)	2#12	1/2"
		SPARE				1P-20	33	34	1P-20		1.28		RECEPTS (1-211)	2#12	1/2"
		SPARE				1P-20	35	36	1P-20			1.28	RECEPTS (1-213)	2#12	1/2"
		SPARE				1P-20	37	38	1P-20	0.90			RECEPTS (1-213)	2#12	1/2"
3/4"	2#10	EWH-1 [1]		2.25		2P-30	39	40	1P-20		0.90		RECEPTS (1-215)	2#12	1/2"
					2.25		41	42	1P-20			1.44	RECEPTS (1-215)	2#12	1/2"

F.T.L. (PANEL L2A2)

PANEL L1A1

3P-225A M.C.B.

A Ø 20.04 kVA | B Ø 18.70 kVA | C Ø 20.27 kVA | TOTAL 59.01 kVA | 164 AMPS

3 Ø 4 W 120/208 VOLT | 225 AMP BUS | BREAKER INTERRUPT RATING 10,000 A.I.C.

COND SIZE	WIRE SIZE	LOAD DESCRIPTION	kVA A Ø	kVA B Ø	kVA C Ø	C/B	CKT NO.	CKT NO.	C/B	kVA A Ø	kVA B Ø	kVA C Ø	LOAD DESCRIPTION	WIRE SIZE	COND SIZE
1/2"	2#12	HAND DRYER	1.40			1P-20	1	2	1P-20	0.84			RECEPTS / AUTOSINKS	2#12	1/2"
1/2"	2#12	HAND DRYER		1.40		1P-20	3	4	1P-20		0.90		A/P RECEPTS	2#12	1/2"
1/2"	2#12	HAND DRYER			1.40	1P-20	5	6	1P-20			0.54	RECEPTION RECEPTS	2#12	1/2"
1/2"	2#12	HAND DRYER	1.40			1P-20	7	8	1P-20	0.72			RECEPTION RECEPTS	2#12	1/2"
1/2"	2#12	HAND DRYER		1.40		1P-20	9	10	1P-20		1.08		CONF. RECEPTS	2#12	1/2"
1/2"	2#12	HAND DRYER			1.40	1P-20	11	12	1P-20			0.40	EWC	2#12	1/2"
1/2"	2#12	HAND DRYER	1.40			1P-20	13	14	1P-20	0.40			EWC	2#12	1/2"
1/2"	2#12	HAND DRYER		1.40		1P-20	15	16	1P-20		0.18		WORK RM RECEPT	2#12	1/2"
1/2"	2#12	HAND DRYER			1.40	1P-20	17	18	1P-20			0.18	WORK RM RECEPT	2#12	1/2"
1/2"	2#12	HAND DRYER	1.40			1P-20	19	20	1P-20	0.18			WORK RM RECEPT	2#12	1/2"
		SPARE				1P-20	21	22	1P-20		1.00		REFRIGERATOR	2#12	1/2"
		SPARE				1P-20	23	24	1P-20			1.50	COPIER	2#12	1/2"
		SPARE				1P-20	25	26	1P-20	0.90			OFFICE RECEPTS	2#12	1/2"
		SPARE				1P-20	27	28	1P-20		0.72		OFFICE RECEPTS	2#12	1/2"
		SPARE				1P-20	29	30	1P-20			0.72	OFFICE RECEPTS	2#12	1/2"
		SPARE				1P-20	31	32	1P-20	0.90			RECEPTS (1-111)	2#12	1/2"
		SPARE				1P-20	33	34	1P-20		1.44		RECEPTS (1-111)	2#12	1/2"
3/4"	2#10	EWH-1 [1]			2.25	2P-30	35	36	1P-20			1.44	RECEPTS (1-112)	2#12	1/2"
			2.25				37	38	1P-20	0.90			RECEPTS (1-112)	2#12	1/2"
1/2"	2#12	EWC		0.40		1P-20	39	40	1P-20		0.90		RECEPTS (1-113)	2#12	1/2"
1/2"	2#12	EWC			0.40	1P-20	41	42	1P-20			1.44	RECEPTS (1-113)	2#12	1/2"

F.T.L. (PANEL L1A2)

PANEL MDP

3P-800A M.C.B.

A Ø 184.87 kVA | B Ø 183.77 kVA | C Ø 184.91 kVA | TOTAL 553.55 kVA | 666 AMPS

3 Ø 4 W 277/480 VOLT | 800 AMP BUS | BREAKER INTERRUPT RATING 65,000 A.I.C.

COND SIZE	WIRE SIZE	LOAD DESCRIPTION	kVA A Ø	kVA B Ø	kVA C Ø	C/B	CKT NO.	CKT NO.	C/B	kVA A Ø	kVA B Ø	kVA C Ø	LOAD DESCRIPTION	WIRE SIZE	COND SIZE
SEE	SEE	PANEL H1A	25.42			3P-225	1	2	3P-225	30.14			PANEL H2A	SEE	SEE
RISER	RISER			28.58			3	4			29.52			RISER	RISER
					22.96		5	6				31.08			
SEE	SEE	75 kVA XFMR T1A	20.04			3P-125	7	8	3P-125	22.64			75 kVA XFMR T2A	SEE	SEE
RISER	RISER			18.70			9	10			20.34			RISER	RISER
					20.27		11	12				23.87			
SEE	SEE	OAU-1	27.11			3P-125	13	14	3P-125	24.91			RTU-2	SEE	SEE
RISER	RISER			27.11			15	16			24.91			RISER	RISER
					27.11		17	18				24.91			
SEE	SEE	RTU-1	24.91			3P-125	19	20	3P-60	8.70			ELEVATOR	3#4	1"
RISER	RISER			24.91			21	22			8.70		(SHUNT TRIP)		
					24.91		23	24				8.70			
		SPACE					25	26					SPACE		
		SPACE					27	28					SPACE		
		SPACE					29	30					SPACE		
		SPACE					31	32					SPACE		
		SPACE					33	34					SPACE		
		SPACE					35	36					SPACE		
3/4"	4#10	TVSS	-			3P-30	37	38					SPACE		
				-			39	40					SPACE		
					-		41	42					SPACE		

PANEL L2A2

M.L.O.

A Ø 12.50 kVA | B Ø 7.47 kVA | C Ø 10.32 kVA | TOTAL 30.29 kVA | 84 AMPS

3 Ø 4 W 120/208 VOLT | 225 AMP BUS | BREAKER INTERRUPT RATING 10,000 A.I.C.

COND SIZE	WIRE SIZE	LOAD DESCRIPTION	kVA A Ø	kVA B Ø	kVA C Ø	C/B	CKT NO.	CKT NO.	C/B	kVA A Ø	kVA B Ø	kVA C Ø	LOAD DESCRIPTION	WIRE SIZE	COND SIZE
1/2"	2#12	RECEPTS (1-216)	1.26			1P-20	1	2	1P-20	1.08			CONF. RECEPTS	2#12	1/2"
1/2"	2#12	RECEPTS (1-216)		0.90		1P-20	3	4	1P-20		0.18		T.P. RECEPT	2#12	1/2"
1/2"	2#12	RECEPTS (1-214)			0.90	1P-20	5	6	1P-20			0.18	T.P. RECEPT	2#12	1/2"
1/2"	2#12	RECEPTS (1-214)	1.28			1P-20	7	8	1P-20	0.72			T.P. RECEPT	2#12	1/2"
1/2"	2#12	RECEPTS (1-212)		0.90		1P-20	9	10	1P-20		1.00		REFRIGERATOR	2#12	1/2"
1/2"	2#12	RECEPTS (1-212)			1.44	1P-20	11	12	1P-20			0.40	EWC	2#12	1/2"
1/2"	2#12	RECEPTS (1-204)	1.26			1P-20	13	14	1P-20	0.40			EWC	2#12	1/2"
1/2"	2#12	RECEPTS (1-204)		0.90		1P-20	15	16					SPACE		
1/2"	2#12	RECEPTS (1-202)			1.28	1P-20	17	18					SPACE		
1/2"	2#12	RECEPTS (1-202)	0.90			1P-20	19	20					SPACE		
1/2"	2#12	RECEPTS (1-200)		0.80		1P-20	21	22	1P-20		0.18		ROOFTOP RECEPT	2#12	1/2"
1/2"	2#12	RECEPTS (1-200)			1.44	1P-20	23	24	2P-15			1.28	CU 1-18	2#12	1/2"
		SPARE				1P-20	25	26		1.28					
		SPARE				1P-20	27	28	2P-15		0.59		CU 1-17A	2#12	1/2"
		SPARE				1P-20	29	30				0.59			
		SPARE				1P-20	31	32	2P-25	1.74			CU 1-17B	2#10	3/4"
		SPARE				1P-20	33	34			1.74				
		SPARE				1P-20	35	36	2P-40			2.60	CU 2-17	2#8	3/4"
		SPARE				1P-20	37	38		2.60					
		SPARE				1P-20	39	40	1P-20		0.18		IDF RECEPTACLES	2#12	1/2"
1/2"	2#12	VAV-2-6.17			0.05	1P-20	41	42	1P-20			0.18	IDF RECEPTACLES	2#12	1/2"

F.T.L.

PANEL L1A2

M.L.O.

A Ø 7.35 kVA | B Ø 7.88 kVA | C Ø 7.20 kVA | TOTAL 22.43 kVA | 62 AMPS

3 Ø 4 W 120/208 VOLT | 225 AMP BUS | BREAKER INTERRUPT RATING 10,000 A.I.C.

COND SIZE	WIRE SIZE	LOAD DESCRIPTION	kVA A Ø	kVA B Ø	kVA C Ø	C/B	CKT NO.	CKT NO.	C/B	kVA A Ø	kVA B Ø	kVA C Ø	LOAD DESCRIPTION	WIRE SIZE	COND SIZE
1/2"	2#12	RECEPTS (1-118)	1.44			1P-20	1	2	1P-20	0.05			VAV-1-8.18	2#12	1/2"
1/2"	2#12	RECEPTS (1-118)		1.08		1P-20	3	4	1P-20				SPARE		
1/2"	2#12	RECEPTS (1-120)			1.26	1P-20	5	6	1P-20				SPARE		
1/2"	2#12	RECEPTS (1-120)	0.90			1P-20	7	8	1P-20				SPARE		
1/2"	2#12	RECEPTS (1-119)		0.72		1P-20	9	10	1P-20				SPARE		
1/2"	2#12	RECEPTS (1-119)			1.08	1P-20	11	12	1P-20				SPARE		
1/2"	2#12	RECEPTS (1-119)	0.72			1P-20	13	14	1P-20				SPARE		
1/2"	2#12	RECEPTS (1-119)		0.72		1P-20	15	16	1P-20				SPARE		
1/2"	2#12	RECEPTS (1-121)			0.72	1P-20	17	18	1P-20				SPARE		
1/2"	2#12	RECEPTS (1-121)	0.72			1P-20	19	20	1P-20				SPARE		
1/2"	2#12	RECEPTS (1-121)		1.08		1P-20	21	22	1P-20		0.90		G.P. RECEPTS	2#12	1/2"
1/2"	2#12	RECEPTS (1-121)			0.72	1P-20	23	24	1P-20			0.18	SUMP PUMP	2#12	1/2"
1/2"	2#12	RECEPTS (1-123)	0.90			1P-20	25	26	1P-20	0.28			ELEVATOR PIT OUTLETS	2#12	1/2"
1/2"	2#12	RECEPTS (1-123)		1.28		1P-20	27	28	1P-20		0.50		ELEVATOR CAB LIGHTS	2#12	1/2"
1/2"	2#12	RECEPTS (1-122)			1.28	1P-20	29	30	1P-20			0.36	PHONE BOARD	2#12	1/2"
1/2"	2#12	RECEPTS (1-122)	0.90			1P-20	31	32	1P-20	0.36			DATA ROOM OUTLET	2#12	1/2"
1/2"	2#12	RECEPTS (1-124)		0.90		1P-20	33	34	1P-20		0.36		DATA ROOM OUTLET	2#12	1/2"
1/2"	2#12	RECEPTS (1-124)			0.90	1P-20	35	36	1P-20			0.36	DATA ROOM OUTLET	2#12	1/2"
1/2"	2#12	RECEPTS (1-124)	0.72			1P-20	37	38	1P-20	0.36			DATA ROOM OUTLET	2#12	1/2"
		SPARE				1P-20	39	40	1P-20		0.36		DATA ROOM OUTLET	2#12	1/2"
		SPARE				1P-20	41	42	1P-20			0.36	DATA ROOM OUTLET	2#12	1/2"

F.T.L.

PANEL H1A

M.L.O.

A Ø 25.42 kVA | B Ø 28.58 kVA | C Ø 22.96 kVA | TOTAL 76.96 kVA | 93 AMPS

3 Ø 4 W 277/480 VOLT | 225 AMP BUS | BREAKER INTERRUPT RATING 22,000 A.I.C.

COND SIZE	WIRE SIZE	LOAD DESCRIPTION	kVA A Ø	kVA B Ø	kVA C Ø	C/B	CKT NO.	CKT NO.	C/B	kVA A Ø	kVA B Ø	kVA C Ø	LOAD DESCRIPTION	WIRE SIZE	COND SIZE
1/2"	2#12	LIGHTING	3.88			1P-20	1	2	1P-20	2.80			SITE LIGHTING	2#10	3/4"
1/2"	2#12	LIGHTING		2.23		1P-20	3	4	1P-20				SPARE		
1/2"	2#12	LIGHTING			1.11	1P-20	5	6	1P-20				|		
1/2"	2#12	LIGHTING	3.44			1P-20	7	8	1P-20				|		
1/2"	2#12	LIGHTING		3.35		1P-20	9	10	1P-20				|		
1/2"	2#12	LIGHTING			3.35	1P-20	11	12	1P-20				|		
		SPACE					13	14	1P-20				V		
		|					15	16	1P-20		4.00		VAV-1-1	2#12	1/2"
		|					17	18	1P-15			1.50	VAV-1-2	2#12	1/2"
		|					19	20	1P-15	1.00			VAV-1-3	2#12	1/2"
		|					21	22	1P-25		4.50		VAV-1-4	2#10	3/4"
		|					23	24	1P-15			2.00	VAV-1-5	2#12	1/2"
		|					25	26	1P-25	5.00			VAV-1-6	2#10	3/4"
		|					27	28	1P-25		5.00		VAV-1-7	2#10	3/4"
		|					29	30	1P-25			5.50	VAV-1-9	2#10	3/4"
		|					31	32	1P-25	4.50			VAV-1-10	2#10	3/4"
		|					33	34	1P-25		5.00		VAV-1-11	2#10	3/4"
		|					35	36	1P-25			4.50	VAV-1-12	2#10	3/4"
		|					37	38	1P-25	5.00			VAV-1-13	2#10	3/4"
		|					39	40	1P-25		4.50		VAV-1-14	2#10	3/4"
		V					41	42	1P-25			5.00	VAV-1-15	2#10	3/4"

F.T.L.

PANEL H2A

M.L.O.

A Ø 30.14 kVA | B Ø 29.52 kVA | C Ø 31.08 kVA | TOTAL 90.75 kVA | 109 AMPS

3 Ø 4 W 277/480 VOLT | 225 AMP BUS | BREAKER INTERRUPT RATING 22,000 A.I.C.

COND SIZE	WIRE SIZE	LOAD DESCRIPTION	kVA A Ø	kVA B Ø	kVA C Ø	C/B	CKT NO.	CKT NO.	C/B	kVA A Ø	kVA B Ø	kVA C Ø	LOAD DESCRIPTION	WIRE SIZE	COND SIZE
1/2"	2#12	LIGHTING	2.11			1P-20	1	2	1P-20	4.00			VAV-2-1	2#12	1/2"
1/2"	2#12	LIGHTING		2.23		1P-20	3	4	1P-20		4.00		VAV-2-2	2#12	1/2"
1/2"	2#12	LIGHTING			2.79	1P-20	5	6	1P-35			7.50	VAV-2-3	2#8	3/4"
1/2"	2#12	LIGHTING	4.09			1P-20	7	8	1P-35	7.50			VAV-2-4	2#8	3/4"
1/2"	2#12	LIGHTING		3.35		1P-20	9	10	1P-20		4.00		VAV-2-5	2#12	1/2"
1/2"	2#12	LIGHTING			3.35	1P-20	11	12	1P-15			1.50	VAV-2-7	2#12	1/2"
		SPARE				1P-20	13	14	1P-15	1.50			VAV-2-8	2#12	1/2"
		SPARE				1P-20	15	16	1P-25		5.00		VAV-2-9	2#10	3/4"
		SPARE				1P-20	17	18	1P-25			5.00	VAV-2-10	2#10	3/4"
		SPARE				1P-20	19	20	1P-25	5.00			VAV-2-11	2#10	3/4"
		SPARE				1P-20	21	22	1P-25		5.00		VAV-2-12	2#10	3/4"
		SPACE					23	24	1P-25			5.00	VAV-2-13	2#10	3/4"
		SPACE					25	26	1P-25	5.00			VAV-2-14	2#10	3/4"
		SPACE					27	28	1P-25		5.00		VAV-2-15	2#10	3/4"
		SPACE					29	30	1P-25			5.00	VAV-2-16	2#10	3/4"
		SPACE					31	32					SPACE		
		SPACE					33	34					SPACE		
		SPACE					35	36					SPACE		
3/4"	3#12	EF-1	0.94			3P-15	37	38					SPACE		
				0.94			39	40					SPACE		
					0.94		41	42					SPACE		

F.T.L.

ELECTRICAL PANELBOARD NOTES

[1] PROVIDE BREAKER LOCK-OFF DEVICE (MAINTENANCE).

RGD
CONSULTING ENGINEERS
1212 INDIANTOWN RD. SUITE 104, JUPITER, FL 33458
RYAN D. MORRIS
FLORIDA P.E. NO. 78456
ELECTRICAL ENGINEER
CERT OF AUTH 9464
DATE 9.18.2014

HARVARD • JOLLY
ARCHITECTURE
Ft. Lauderdale 954-486-7910
Ft. Myers 239-275-7774
Jacksonville 904-396-3300
Orlando 407-667-7727
Punta Gorda 941-575-0403
St. Petersburg 727-896-4611
Tampa 813-286-8206
West Palm Beach 561-478-4457
AAC000119
www.HarvardJolly.com
WEST PALM BEACH, FL.

NEW CLASSROOM BUILDING
RIVIERA BEACH MARITIME ACADEMY
RIVIERA BEACH, FLORIDA
CONTRUCTION DOCUEMENTS

Comm. No: 214031.00
Date: 09-24-14
Drawn: RGD
Revised:

copyright 2014

E5.1

GENERAL FIRE SPRINKLER NOTES

1. ALL FIRE SPRINKLER WORK TO BE INSTALLED BY A FIRE SPRINKLER CONTRACTOR CERTIFIED IN THE STATE OF FLORIDA.
2. DETAILED DESIGN OF THE SPRINKLER SYSTEM SHALL BE COMPLETED BY A DELEGATED ENGINEER REGISTERED IN THE STATE OF FLORIDA AND SHALL COMPLY WITH NFPA 13-2010, THESE DOCUMENTS AND THE LOCAL AUTHORITY HAVING JURISDICTION.
3. SHOP DRAWINGS SHALL BE SUBMITTED TO THE ENGINEER OF RECORD SIGNED AND SEALED BY THE DELEGATED ENGINEER AND SHALL INCLUDE BUT NOT BE LIMITED TO THE FLOW TEST DATA, BACK FLOW AND FLOW SWITCHES, RISER ASSEMBLY DRAIN AND TEST ASSEMBLY HEAD LOCATIONS, CUT LENGTHS AND HYDRAULIC CALCULATIONS.
4. COVERAGE FOR THE OCCUPANCIES SHALL BE AS FOLLOWS: LIGHT HAZARD 0.1GPM/SF, ORDINARY HAZARD GRP 1 1.5GPM/SF
5. ALL SPRINKLER PIPE TO BE TESTED TO 200PSI FOR 2 HOURS
6. MAXIMUM FLOOR AREA FOR A SINGLE FIRE SPRINKLER RISER IS 52,000 SF FOR LIGHT AND ORDINARY HAZARD AREAS.
7. ALL WORKMANSHIP AND MATERIALS SHALL BE IN STRICT ACCORDANCE WITH NFPA 13 AND THE APPLICABLE LOCAL CODES, RULES AND ORDINANCES.
8. ENGINEER OF RECORD RECOGNIZES THE SPRINKLER CONTRACTOR TO BE LICENSE IN THE STATE OF FLORIDA. THE SPRINKLER CONTRACTOR SHALL CONSIDER THE PROJECT AS ONE SET OF DOCUMENTS. THE GENERAL CONTRACTOR SHALL PROVIDE THE SPRINKLER CONTRACTOR A COMPLETE SET OF DOCUMENTS INCLUDING ALL TRADES PRIOR TO BIDDING AND CONSTRUCTION. THE SPRINKLER CONTRACTOR SHALL COORDINATE WITH ALL OTHER CONTRACTORS AS REQUIRED AND WILL INFORM THE ARCHITECT/ENGINEER OF ANY DISCREPANCIES OR POSSIBLE CONFLICTS ON THE DOCUMENTS PRIOR TO SUBMITTING FINAL BID AND COMMENCING ANY WORK. THE SPRINKLER CONTRACTOR SHALL MAKE HIMSELF AVAILABLE FOR REVIEWING DOCUMENTS WITH ARCHITECT/ENGINEER UPON REQUEST
9. THE FIRE SPRINKLER CONTRACTOR SHALL BE HELD TO HAVE VERIFIED ALL EXISTING CONDITIONS, INCLUDING SITE VISITATION, AND REVIEW OF AS BUILT DOCUMENTATION AS APPLICABLE PRIOR TO BIDDING, ORDERING, FABRICATION OR INSTALLATION OF ANY MATERIALS OR EQUIPMENT ON THIS PROJECT
10. UNLESS OTHERWISE SPECIFIED ALL MATERIALS SHALL BE NEW. ALL WORK SHALL BE PERFORMED BY A LICENSED FIRE SPRINKLER CONTRACTOR IN A FIRST CLASS WORKMANLIKE MANNER. THE COMPLETED SYSTEM SHALL BE FULLY OPERATIVE. ALL EXCAVATION AND BACK FILL AS REQUIRED FOR THIS PHASE OF CONSTRUCTION SHALL BE A PART OF THIS CONTRACT.
11. REQUIRED INSURANCE SHALL BE PROVIDED BY THE FIRE SPRINKLER CONTRACTOR FOR PROTECTION AGAINST PUBLIC LIABILITY AND PROPERTY DAMAGE FOR THE DURATION OF THE WORK.
12. FIRE SPRINKLER CONTRACTOR SHALL SECURE AND PAY FOR ALL PERMITS, FEES, INSPECTION AND TESTS. FIRE SPRINKLER CONTRACTOR TO OBTAIN PERMIT AND APPROVED SUBMITTALS PRIOR TO BEGINNING WORK OR ORDERING EQUIPMENT. FIRE SPRINKLER CONTRACTOR MUST BE PRESENT FOR ALL INSPECTIONS OF HIS WORK BY REGULATORY AUTHORITIES.
13. THE SPRINKLER CONTRACTOR SHALL PROVIDE IN WRITING AND ON COMPANY LETTER HEAD, ALL ITEMS VALUE ENGINEERED OR OMITTED FROM PROJECT BIDS. THE INFORMATION SHALL BE PROVIDED TO ARCHITECT AND ENGINEER FOR REVIEW PRIOR TO SUBMITTING FINAL BID. CONTRACTOR SHALL MAKE HIMSELF AVAILABLE FOR REVIEWING DOCUMENTS WITH ARCHITECT ENGINEER/OWNER UPON REQUEST
14. DRAWINGS ARE DIAGRAMMATIC IN NATURE AND ARE TO BE READ IN CONJUNCTION WITH ARCHITECTURAL, MECHANICAL, ELECTRICAL, PLUMBING, AND STRUCTURAL DRAWINGS AND ARE CONSIDERED TO BE ONE SET OF DOCUMENTS. BENDS OFFSETS AND TRANSITIONS WILL BE REQUIRED TO PROVIDE AND INSTALL A COMPLETE AND FUNCTIONAL SYSTEM AND SHALL BE PROVIDED BY THE FIRE SPRINKLER CONTRACTOR AT NO ADDITIONAL COST. DO NOT SCALE FOR THE EXACT LOCATION OF FIXTURES, PIPING, EQUIPMENT, ETC.
15. FIRE SPRINKLER CONTRACTOR SHALL SUBMIT FOR APPROVAL FIVE (5) COPIES OF MANUFACTURER'S DRAWINGS FOR EACH PIECE OF EQUIPMENT INCLUDED IN CONTRACT. ALL MATERIAL SHALL BE NEW OF U.S. MANUFACTURER OF GOOD QUALITY. ALL WORK SHALL BE PERFORMED IN A WORKMANLIKE MANNER BY SKILLED TRADESMEN.
16. ALL WORK SHALL BE COORDINATED WITH OTHER TRADES TO AVOID INTERFERENCE WITH THE PROGRESS OF CONSTRUCTION. REPORT ANY DISCREPANCY TO ENGINEER/ARCHITECT PRIOR TO BEGINNING CONSTRUCTION.
17. VERIFY LOCATION, SIZE, AND DIRECTION OF FLOW OF ALL EXISTING FIRE PIPE PRIOR TO BEGINNING OF CONSTRUCTION. ADVISE ENGINEER OF ANY DISCREPANCIES.
18. FIRE SPRINKLER DRAWINGS ARE TO BE SUBMITTED TO THE ARCHITECT/ENGINEER/OWNER FOR REVIEW PRIOR TO ANY FABRICATION OR INSTALLATION.

ENGINEERED SPRINKLER SHOP DRAWING NOTE

1. THE CONTRACTOR SHALL PROVIDE (REGARDLESS OF THE NUMBER OF SPRINKLER HEADS) LAYOUT DRAWINGS, HYDRAULIC CALCULATIONS, CATALOG INFORMATION ON STANDARD PRODUCTS, AND OTHER CONSTRUCTION DATA PREPARED BY AN ENGINEER LICENSED IN THE STATE OF FLORIDA THAT PROVIDES DETAIL ON THE LOCATION OF RISERS, CROSS MAINS, BRANCH LINES SPRINKLER HEADS, SIZING OF PIPE, HANGER LOCATIONS, AND HYDRAULIC CALCULATIONS AND ALSO SERVES AS A GUIDE FOR FABRICATION AND INSTALLATION OF A FIRE PROTECTION SYSTEM. SIGNED AND SEALED DRAWINGS SHALL BE PREPARED BY AN ENGINEER REGISTERED UNDER CHAPTER 471 FLORIDA STATUTES.
2. CONTRACTOR SHALL VERIFY EXISTING CONDITIONS AND INSTALL A COMPLETE WORKING SYSTEM IN ACCORDANCE WITH ALL APPLICABLE CODES. THE NFPA 13 AND THE LOCAL AUTHORITY HAVING JURISDICTION.
3. IT IS THE RESPONSIBILITY OF THE SPRINKLER CONTRACTOR TO COORDINATE THE LOCATIONS OF PENDANT SPRINKLER HEADS WITH REGARD TO THE WOOD BEAMS AND OTHER SIMILAR OBSTRUCTIONS. SPRINKLER LOCATIONS SHOWN ARE FOR GENERAL GUIDANCE ONLY. ARCHITECTURAL STRUCTURAL PLANS SHALL BE OBTAINED TO PROPERLY SPACE THE SPRINKLER HEADS AND PIPE ROUTING.

SPRINKLER HEAD LOCATION NOTES

1. ALL SPRINKLER HEADS, UNLESS OTHERWISE NOTED, MUST BE OF THE CONCEALED (POP-DOWN) TYPE.
2. RELOCATE EXISTING (RE) SPRINKLER HEADS AS NEEDED. MATCH STYLE OF NEW HEADS TO EXISTING FOR UNIFORMITY.
3. SPRINKLERS LOCATED IN STORAGE, MECHANICAL AND MAINTENANCE AREAS OR ANYWHERE THAT ARCHITECTUAL FINISH IS UNECESSARY SHALL BE UPTURNED TYPE HEADS.
4. CONTRACTOR IS RESPONSIBLE FOR ANY AND ALL SUPPLEMENTAL ENGINEERING REQUIRED FOR RELOCATIONS OF EXISTING AND INSTALLATIONS OF NEW SPRINKLER HEADS.
5. CONTRACTOR IS RESPONSIBLE FOR ALL ENGINEERING NECESSARY FOR ACCOMODATING, MAINTAINING AND SUPPORTING FUNCTIONALITY OF FIRE SPRINKLER SYSTEMS IN UNREMODELED AREAS DURING CONSTRUCTION AND INSTALLATION.
6. CONTRACTOR SHALL PROVIDE FIRE SPRINKLER HEADS IN ATTIC AREAS OR SPACES THAT ARE COMBUSTIBLE. CONTRACTOR SHALL FIELD VERIFY AND PROVIDE HEAD LOCATIONS ON FIRE SPRINKLER SHOP DRAWINGS.
7. INSTALLATION OF ALL FIRE PROTECTION SYSTEMS MUST BE IN ACCORDANCE WITH ALL APPLICABLE BUILDING CODE REQUIREMENTS. CONTRACTOR RESPONSIBLE FOR CODE COMPLIANCE AND ANY ADJUSTMENTS TO PLAN AND SUPPLEMENTAL ENGINEERING AS REQUIRED.

FIRE SPRINKLER SPECIFICATIONS

1. ALL MATERIALS USED SHALL BE IN ACCORDANCE WITH NFPA 13-2010 EDITION AND THE LOCAL AUTHORITY HAVING JURISDICTION.

SPRINKLERS - NFPA 13 - 6.2:

6.2.1 ONLY NEW SPRINKLERS SHALL BE INSTALLED
6.2.2 ALL SPRINKLERS SHALL BE PERMANENTLY MARKED WITH ONE OR TWO ENGLISH UPPERCASE ALPHABETIC CHARACTERS TO IDENTIFY THE MANUFACTURER, IMMEDIATELY FOLLOWED BY THREE OR FOUR NUMBERS, TO UNIQUELY IDENTIFY THE SPRINKLER AS TO K-FACTOR (ORIFICE SIZE) OR ORIFICE SHAPE, DEFLECTOR CHARACTERISTIC PRESSURE RATING, AND THERMAL SENSITIVITY.

STOCK OF SPARE SPRINKLERS - NFPA 13 - 6.2.9:

6.2.9.1 A SUPPLY OF AT LEAST SIX SPARE SPRINKLERS (NEVER FEWER THAN SIX) SHALL BE MAINTAINED ON THE PREMISES SO THAT ANY SPRINKLERS THAT HAVE OPERATED OR BEEN DAMAGED IN ANY WAY CAN BE PROMPTLY REPLACED.
6.2.9.2 THE SPRINKLERS SHALL CORRESPOND TO THE TYPES AND TEMPERATURE RATINGS OF THE SPRINKLERS IN THE PROPERTY.
6.2.9.3 THE SPRINKLERS SHALL BE KEPT IN A CABINET LOCATED WHERE THE TEMPERATURE TO WHICH THEY ARE SUBJECTED WILL AT NO TIME EXCEED 100°F (38°C).
6.2.9.4 WHERE DRY SPRINKLERS OF DIFFERENT LENGTHS ARE INSTALLED, SPARE DRY SPRINKLERS SHALL NOT BE REQUIRED PROVIDED THAT A MEANS OF RETURNING THE SYSTEM TO SERVICE IS FURNISHED
6.2.9.5 THE STOCK OF SPARE SPRINKLERS SHALL INCLUDE ALL TYPES AND RATINGS INSTALLED AND SHALL BE AS FOLLOWS:
(1) FOR PROTECTED FACILITIES HAVING UNDER 300 SPRINKLERS - NO FEWER THAN SIX SPRINKLERS
(2) FOR PROTECTED FACILITIES HAVING 300 TO 1000 SPRINKLERS - NO FEWER THAN 12 SPRINKLERS
(3) FOR PROTECTED FACILITIES HAVING OVER 1000 SPRINKLERS - NO FEWER THAN 24 SPRINKLERS
6.2.9.6 ONE SPRINKLER WRENCH AS SPECIFIED BY THE SPRINKLER MANUFACTURER SHALL BE PROVIDED IN THE CABINET FOR EACH TYPE OF SPRINKLER INSTALLED TO BE USED FOR THE REMOVAL AND INSTALLATION OF SPRINKLERS IN THE SYSTEM.

ABOVEGROUND PIPE AND TUBE - NFPA 13 - 6.3:

6.3.1.1 PIPE OR TUBE SHALL MEET OR EXCEED ONE OF THE STANDARDS IN TABLE 6.3.1.1 OR BE IN ACCORDANCE WITH 6.3.6.
A. PIPING 1" - 2" IN DIAMETER STEEL THREADED PIPE TO BE THINWALL ALLIED XL PIPE OR APPROVED EQUIVALENT.
B. PIPING 2½" - 8" IN DIAMETER WELDED PIPE TO BE BLACK SCHEDULE 10 OR APPROVE D EQUIVALENT

FITTINGS - NFPA 13 - 6.4:

6.4.1 FITTINGS USED IN SPRINKLER SYSTEMS SHALL MEET OR EXCEED THE STANDARDS IN TABLE 6.4.1 OR BE IN ACCORDANCE WITH 6.4.2 OR 6.4.3.
A. THREADED FITTINGS TO BE CAST IRON
B. GROOVED FITTINGS SHALL BE GRINNELL OR EQUIVALENT

VALVES - NFPA 13 - 6.7:

6.7.1.1 WHEN WATER PRESSURES EXCEED 175 PSI (12.1 BAR), VALVES SHALL BE USED IN ACCORDANCE WITH THEIR PRESSURE RATINGS.
6.7.1.2 LISTED INDICATING VALVES SHALL NOT CLOSE IN LESS THAN 5 SECONDS WHEN OPERATED AT MAXIMUM POSSIBLE SPEED FROM THE FULLY OPEN POSITION.
6.7.1.3 UNLESS THE REQUIREMENTS OF 6.7.1.3.1, 6.7.1.3.2, OR 6.7.1.3.3 ARE MET, ALL VALVES CONTROLLING CONNECTIONS TO WATER SUPPLIES AND TO SUPPLY PIPES TO SPRINKLERS SHALL BE LISTED INDICATING VALVES.
6.7.1.3.1 A LISTED UNDERGROUND GATE VALVE EQUIPPED WITH A LISTED INDICATOR POST SHALL BE PERMITTED.
6.7.1.3.2 A LISTED WATER CONTROL VALVE ASSEMBLY WITH A RELIABLE POSITION INDICATION CONNECTED TO A REMOTE SUPERVISORY STATION SHALL BE PERMITTED.
6.7.1.3.3 A NON-INDICATING VALVE, SUCH AS AN UNDERGROUND GATE VALVE WITH APPROVED ROADWAY BOX, COMPLETE WITH T-WRENCH, AND WHERE ACCEPTED BY THE AUTHORITY HAVING JURISDICTION, SHALL BE PERMITTED.
6.7.2 WAFER-TYPE VALVES WITH COMPONENTS THAT EXTEND BEYOND THE VALVE BODY SHALL BE INSTALLED IN A MANNER THAT DOES NOT INTERFERE WITH THE OPERATION OF ANY SYSTEM COMPONENTS.
6.7.3 DRAIN VALVES AND TEST VALVES SHALL BE APPROVED.

FIRE DEPARTMENT CONNECTIONS - NFPA 13 - 6.8:

6.8.1 UNLESS THE REQUIREMENTS OF 6.8.1.1, 6.8.1.2, OR 6.8.1.3 ARE MET, THE FIRE DEPARTMENT CONNECTION(S) SHALL CONSIST OF TWO 2½ IN. (65mm) CONNECTIONS USING NH INTERNAL THREADED SWIVEL FITTING(S) WITH "2.5-7.5 NH STANDARD THREAD," AS SPECIFIED IN NFPA 1963, STANDARD FOR FIRE HOSE CONNECTIONS.
6.8.1.1 WHERE LOCAL FIRE DEPARTMENT CONNECTIONS DO NOT CONFORM TO NFPA 1963, STANDARD FOR FIRE HOSE CONNECTIONS, THE AUTHORITY HAVING JURISDICTION SHALL BE PERMITTED TO DESIGNATE THE CONNECTION TO BE USED.
6.8.1.2 THE USE OF THREADLESS COUPLINGS SHALL BE PERMITTED WHERE REQUIRED BY THE AUTHORITY HAVING JURISDICTION AND WHERE LISTED FOR SUCH USE.
6.8.1.3 A SINGLE-OUTLET FIRE DEPARTMENT CONNECTION SHALL BE ACCEPTABLE WHERE PIPED TO A 3 IN. (80mm) OR SMALLER RISER.
6.8.2 FIRE DEPARTMENT CONNECTIONS SHALL BE EQUIPPED WITH APPROVED PLUGS OR CAPS, PROPERLY SECURED AND ARRANGED FOR EASY REMOVAL BY FIRE DEPARTMENTS.
6.8.3 FIRE DEPARTMENT CONNECTIONS SHALL BE OF AN APPROVED TYPE.
A. FIRE DEPARTMENT CONNECTION TO BE LOCATED 18" TO 48" ABOVE GRADE

9.1 HANGERS:

9.1.1.1 UNLESS THE REQUIREMENTS OF 9.1.1.2 ARE MET TYPES OF HANGERS SHALL BE IN ACCORDANCE WITH THE REQUIREMENTS OF SECTION 9.1.
A. HANGER SPACING TO BE PER NFPA 13 (HANGER LEGEND SHOWN ON DRAWING)
B. HANGERS TO BE PER DETAIL SHOWN ON DRAWING.

10 UNDERGROUND PIPING:

10.1.1 PIPING SHALL BE LISTED FOR FIRE PROTECTION SERVICE AND SHALL COMPLY WITH THE STANDARDS IN TABLE 10.1.1.
10.1.2 STEEL PIPING SHALL NOT BE USED FOR GENERAL UNDERGROUND SERVICE UNLESS SPECIFICALLY LISTED FOR SUCH SERVICE.
10.1.3 WHERE EXTERNALLY COATED AND WRAPPED AND INTERNALLY GALVANIZED, STEEL PIPE SHALL BE PERMITTED TO BE USED BETWEEN THE CHECK VALVE AND THE OUTSIDE HOSE COUPLING FOR THE FIRE DEPARTMENT CONNECTION.
A. UNDERGROUND PIPE TO BE DR-14 C-900 U.N.O.
B. ALL PIPE TO BE INSTALLED A MIN. OF 30" BELOW GRADE OR 36" BELOW DRIVEWAYS (GRADE TO BE VERIFIED IN FIELD).
C. ALL PIPING INSTALLATION TO MEET REQUIREMENTS OF NFPA 24 & LOCAL CODES.
D. ALL UNDERGROUND PIPE TO FLUSHED AND TESTED AT 200PSI FOR 2 HOURS BEFORE CONNECTING TO THE BUILDING SYSTEM
E. ALL UNDERGROUND FIRE SERVICE PIPE TO BE INSTALLED BY A CERTIFIED CONTRACTOR.
F. UNDERGROUND PIPING TO USE MECHANICAL JOINTS AND BE RESTRAINED WITH MEGA- LUCS.

Call 48 hours before you dig
It's the Law!
1-800-432-4770
Sunshine State One Call of Florida, Inc.

FIRE SPRINKLER SHEET INDEX

FS0.1	FIRE SPRINKLER NOTES, SCOPE OF WORK, & SHEET INDEX
FS1.1	FIRE SPRINKLER OCCUPANCY HAZARD ZONE MAPS
FS2.1	FIRE SPRINKLER SCHEDULES & DETAILS

FIRE SPRINKLER SCOPE OF WORK

1. SCOPE OF WORK IS TO PROVIDE ENTIRE NEW SCHOOL BUILDING WITH A COMPLETE FIRE SPRINKLER WET SYSTEM (LIGHT HAZARD WITH INCIDENTAL ORDINARY GROUP 1 HAZARD AREAS).
2. CONTRACTOR SHALL ORDER A FLOW TEST AND REPORT RESULTS BACK TO ENGINEER PRIOR TO HYDRAULIC CALCULATIONS.
3. COORDINATE HEAD STYLE, COLOR, AND FINAL LOCATIONS WITH ARCHITECT.
4. COORDINATE WITH FIRE ALARM SYSTEM.

APPLICABLE BUILDING CODES

FLORIDA BUILDING CODE, 2010
FLORIDA FIRE PROTECTION CODE 2010
NFPA 1, 2009 FLORIDA EDITION
NFPA 13, 2010 EDITION
NFPA 101, 2009 FLORIDA EDITION

RGD
CONSULTING ENGINEERS
MICHAEL J. BISHOP
FLORIDA P.E. NO. 73000
MECHANICAL ENGINEER
CERT. OF AUTH. 3434
DATE 8.19.2014

HARVARD • JOLLY
ARCHITECTURE
Ft. Lauderdale 954-486-7910
Ft. Myers 239-275-7774
Jacksonville 904-396-3300
Orlando 407-667-7727
Punta Gorda 941-575-0403
St. Petersburg 727-896-4611
Tampa 813-286-8206
West Palm Beach 561-478-4457
AAC000119
www.HarvardJolly.com
WEST PALM BEACH, FL

NEW CLASSROOM BUILDING
RIVIERA BEACH MARITIME ACADEMY
RIVIERA BEACH, FLORIDA
CONTRUCTION DOCUEMENTS

Comm. No:	214031.00
Date:	09-24-14
Drawn:	RGD
Revised:	

copyright 2014

FS0.1

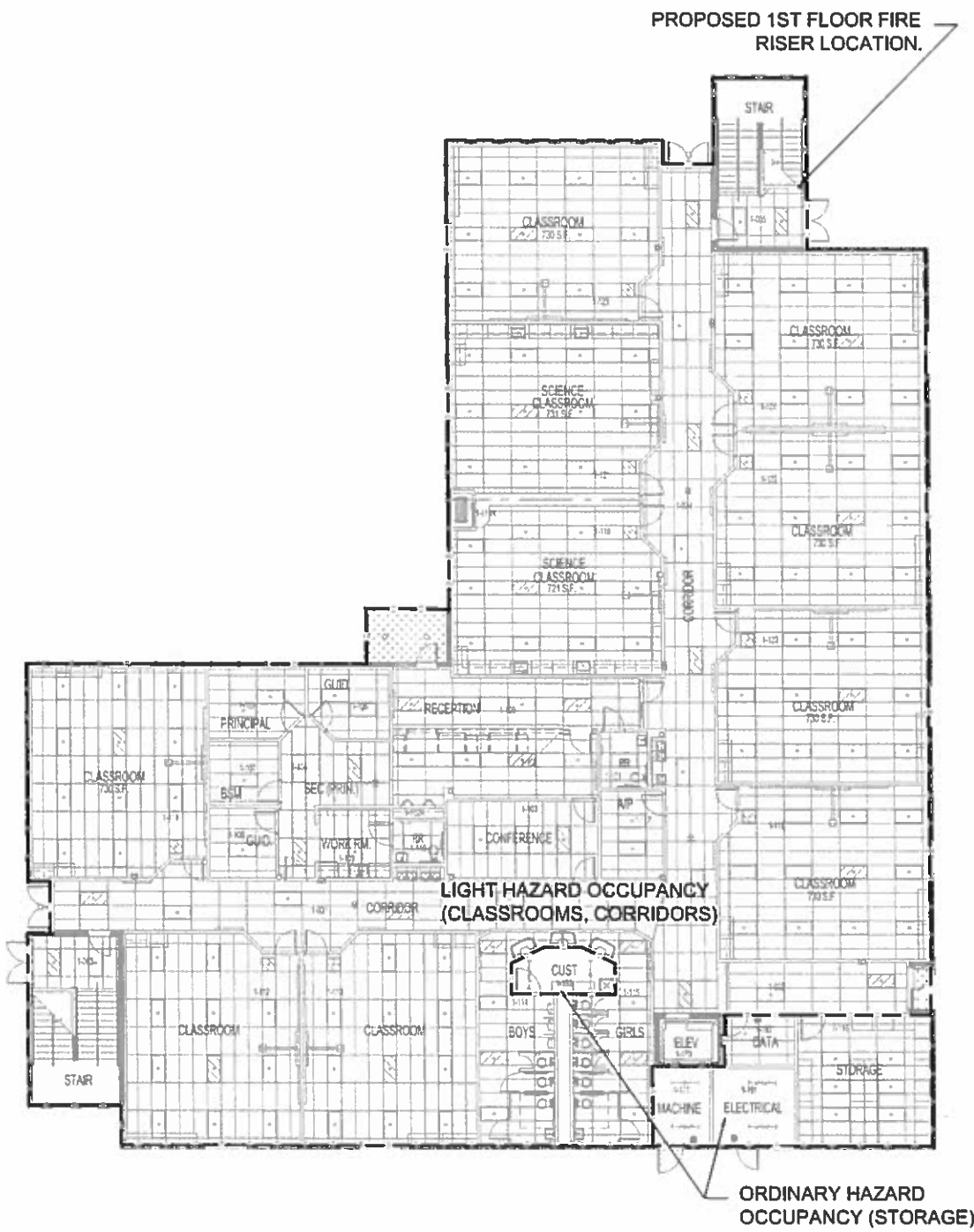

1 FIRE SPRINKLER OCCUPANCY HAZARD ZONE MAPS - 1st FLOOR

SCALE: 3/32" = 1'-0"

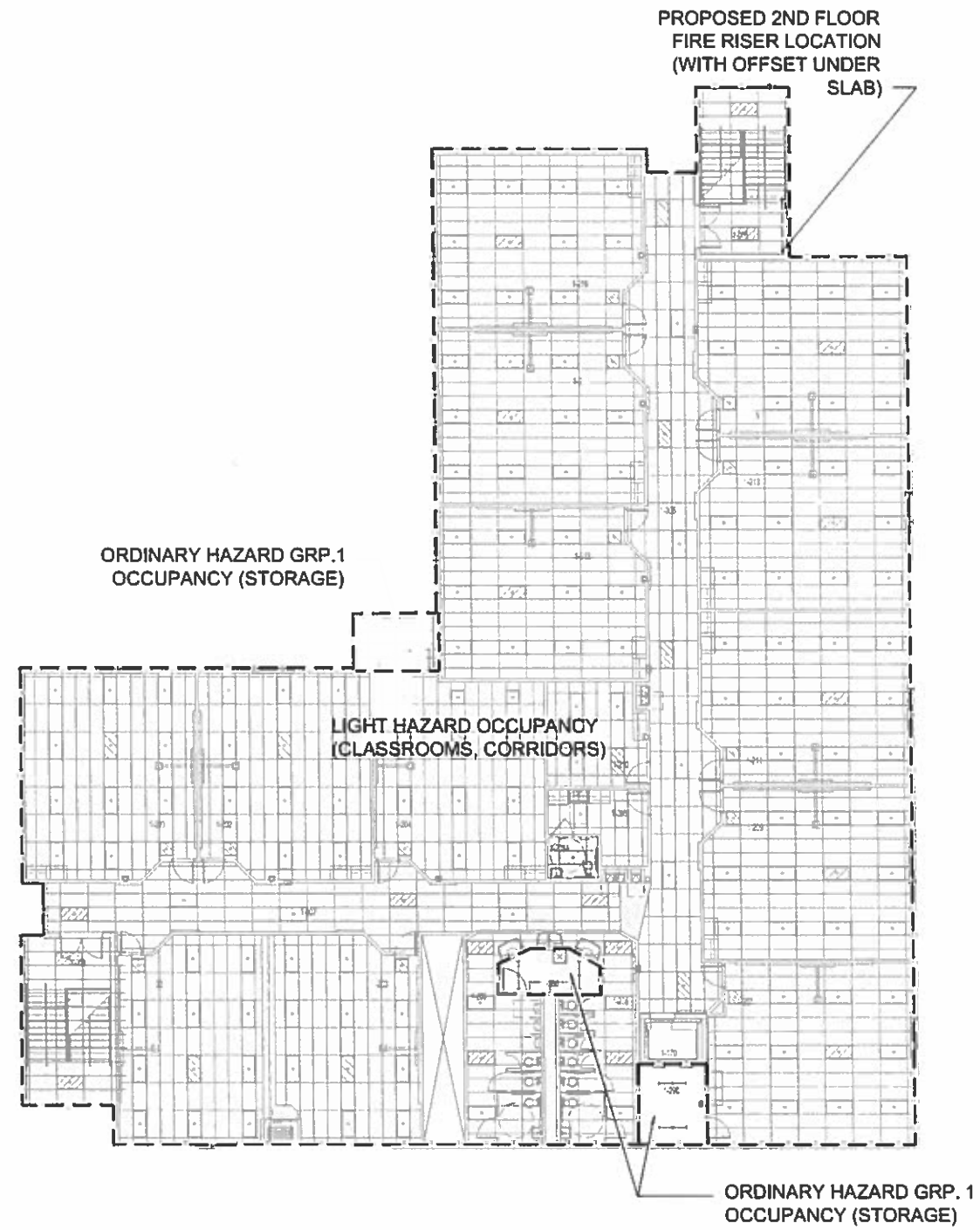

2 FIRE SPRINKLER OCCUPANCY HAZARD ZONE MAPS - 2nd FLOOR

SCALE: 3/32" = 1'-0"

RGD
CONSULTING ENGINEERS

MICHAEL J. BISHOP
FLORIDA P.E. NO.
MECHANICAL ENGINEER
CERT. OF AUTH. 9454
DATE 9.19.2014

HARVARD•JOLLY
ARCHITECTURE

Ft. Lauderdale 954-486-7910
Ft. Myers 239-275-7774
Jacksonville 904-396-3300
Orlando 407-687-7727
Punta Gorda 941-575-0403
Petersburg 727-898-4611
Tampa 813-286-6206
West Palm Beach 561-478-4457
AAC000119
www.HarvardJolly.com
WEST PALM BEACH, FL.

NEW CLASSROOM BUILDING
RIVIERA BEACH MARITIME ACADEMY
RIVIERA BEACH, FLORIDA
CONTRUCTION DOCUEMENTS

Comm. No:	214031 00
Date:	09-24-14
Drawn:	RGD
Revised:	

copyright 2014

FS1.1

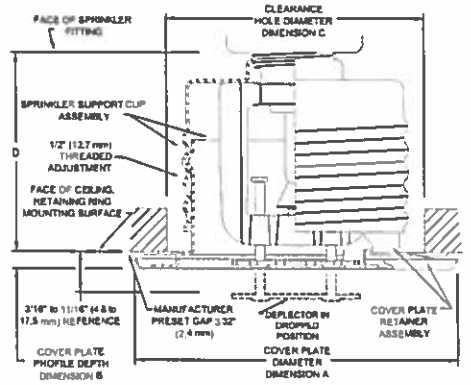

TYCO RFII - QUICK RESPONSE WHITE CONCEALED SPRINKLER - K=5.6 - 155° SIN-TY3531

TYCO RFII WHITE CONCEALED SPRINKLER HEAD DETAIL

N.T.S

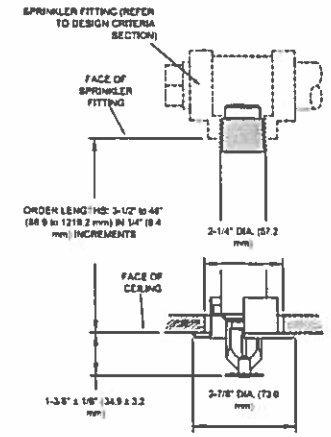

TYCO DS-1 DRY PENDENT

N.T.S

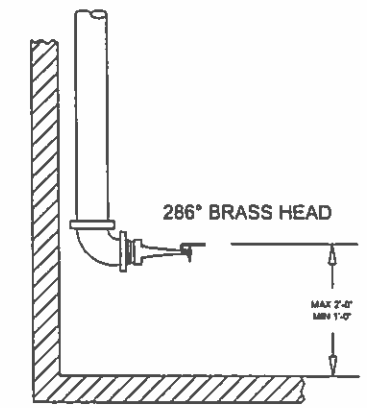

TYPICAL RETURN BEND FOR ELEVATOR SHAFT

N.T.S

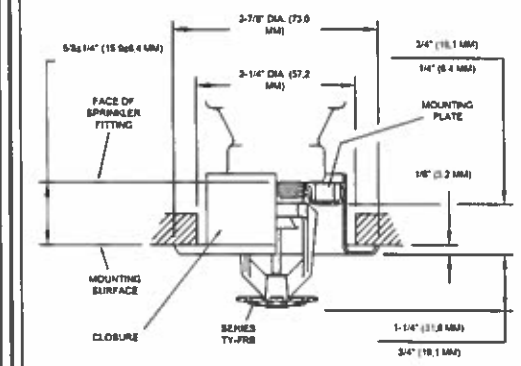

TYCO TY-FRB WHITE RECESSED PENDENT SPRINKLER - K=5.6 - 155° SIN-TY3231

TYCO TY-FRB WHITE RECESSED PENDENT SPRINKLER HEAD

N.T.S

HANGER LOCATION SCHEDULE

PIPE SIZE	A	B*	C
1"	3'-0" MAX.	12'-0" MAX.	3" MIN.
1½"	4'-0" MAX.	12'-0" MAX.	3" MIN.
1½"-4"	5'-0" MAX.	15'-0" MAX.	3" MIN.

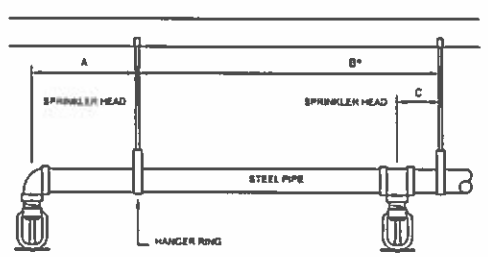

* MAXIMUM HANGER SPACING FOR THREADED LIGHTWALL STEEL PIPE IS 12'-0" FOR ALL PIPE SIZES

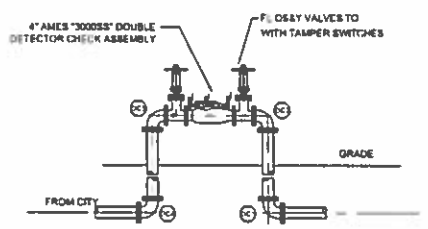

DOUBLE DETECTOR CHECK ASSEMBLY DETAIL

N.T.S

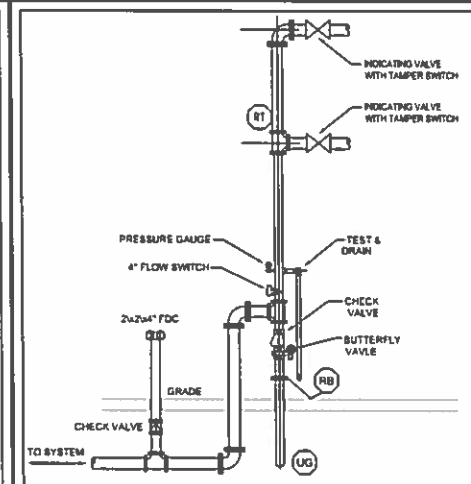

RISER DETAIL

N.T.S

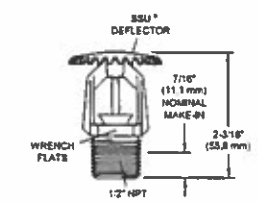

TYCO TY-FRB BRASS UPRIGHT SPRINKLER - K=5.6 - 155° SIN-TY3131

TYCO TY-FRB BRASS UPRIGHT SPRINKLER HEAD DETAIL

N.T.S

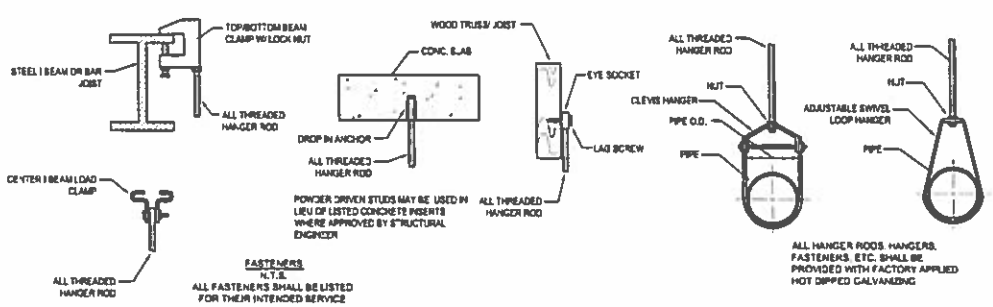

TYPICAL PIPE HANGERS

ALL HANGERS SHALL BE LISTED FOR THEIR INTENDED SERVICE

N.T.S

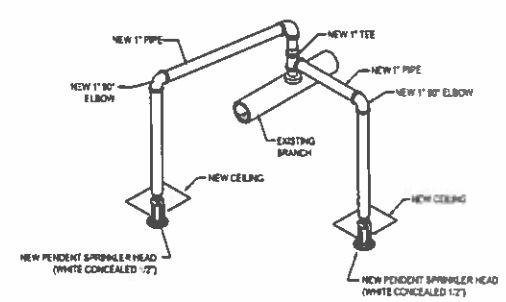

2-HEAD RELOCATE ARMOVER DETAIL

N.T.S

RGD CONSULTING ENGINEERS

MECHANICAL | ELECTRICAL | PLUMBING | FIRE PROTECTION | STRUCTURAL

Engineering Innovation

[illegible] Tel. (561) 363-6144

These Drawings are NOT VALID for any purpose which requires the original signature and seal of the engineer unless the original signature and seal are affixed. Drawings not signed and sealed for the engineer shall not be submitted to any authority or used for any purpose where signed and sealed documents are required.

MICHAEL J. BISHOP
FLORIDA P.E. NO. 73998
MECHANICAL ENGINEER
CERT. OF AUTH. 9494

DATE 8.19.2014

HARVARD • JOLLY ARCHITECTURE

Ft. Lauderdale (954-489-7910)
Ft. Myers 239-275-7775
Jacksonville 904-396-3300
Orlando 407-647-2777
Ponte Gorda 941-575-0403
St. Petersburg 727-896-4611
Tampa 813-286-3235
West Palm Beach 561-478-4457
AAC0001119
www.harvardjolly.com
WEST PALM BEACH, FL

NEW CLASSROOM BUILDING
RIVIERA BEACH MARITIME ACADEMY
RIVIERA BEACH, FLORIDA
CONTRUCTION DOCUMENTS

Contr. No:	214031.00
Date:	09-24-14
Drawn:	RGD
Revised:	

copyright 2014

FS2.1

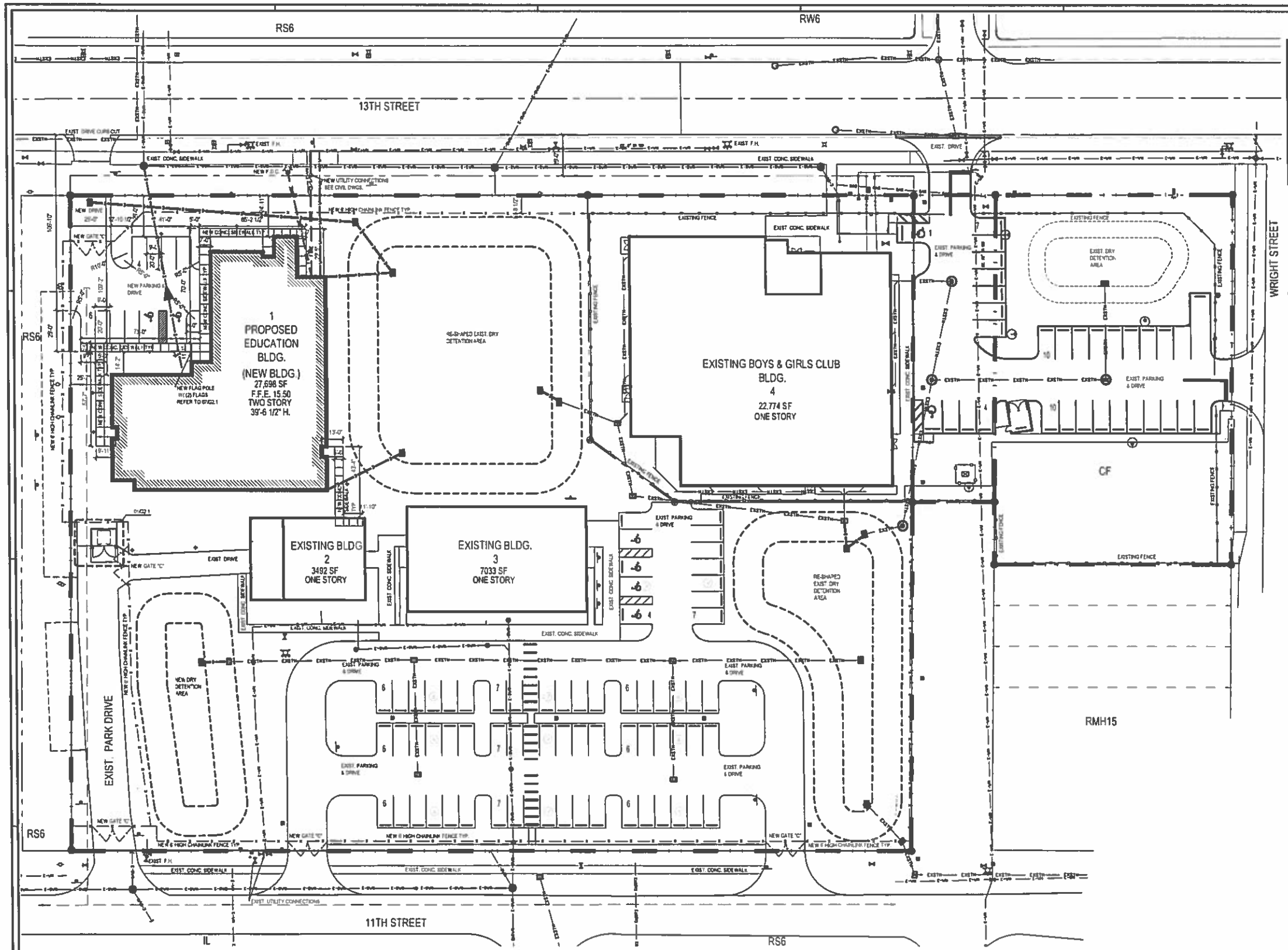

01 OVERALL SITE PLAN

SCALE: 1"= 30'-0"

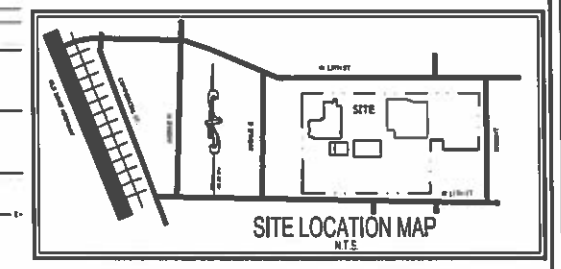

SITE PLAN DATA

PARCEL CONTROL NUMBER:	72-41-43-34-00-003-7130
NAME OF PROJECT:	NEW CLASSROOM BUILDING RIVIERA BEACH MARITIME ACADEMY 201 W 11TH ST RIVIERA BEACH, FL 33404
LEGAL DESCRIPTION:	LEGAL DESCRIPTION FOR RIVIERA PAR MARSHEDNOT INCLUDED ON REPLAT OF RIVIERA IN PB38P41 BOUNDED ON N BY S U OF 12TH ST, ON W BY E U OF W PARK DR ON E BY W U OF AVE F & ON S BY N U OF 11TH ST AREA AVAILABLE FOR SITE PLAN PURPOSES=4.7 ACRES MORE OR LESS
ZONING DESIGNATION:	Community Facilities
PROPOSED USE:	Community Facilities (Education)
FUTURE LAND USE DESIGNATION:	Community Facilities
TOTAL SITE AREA:	4.7 ACRES/ 205,912SF
PARKING PROVIDED:	
EXISTING SPACES (W/ 4 ADA SPACES)=	88 SPACES
NEW SPACES (W/ 2 ADA SPACES)=	18 SPACES
TOTAL=	106 SPACES
BUILDING AREA CALCULATIONS:	
NEW GROSS ENCLOSED BUILDING:	
"1" NEW EDUCATION BUILDING 1ST FLOOR =	14,140 SF
"1" NEW EDUCATION BUILDING 1ST FLOOR =	13,559 SF
SUB-TOTAL SF=	27,699 SF
EXISTING BLDGS.:	
"2" EXIST. EDUCATION BUILDING =	3492 SF
"3" EXIST. EDUCATION BUILDING =	7033 SF
"4" EXIST BOYS & GIRLS CLUB =	22,774 SF
SUB-TOTAL SF=	33,299 SF
GRAND TOTAL SF=	61,997 SF
NEW S.F 27,699 SF / EXISTING S.F 33,299 SF=	0.30%
SITE AREA CALCULATIONS:	
TOTAL SITE AREA	4.7 ACRES/ 205,912SF
LANDSCAPE AREA	92,559 SF
EXISTING SIDEWALKS	3001 SF
NEW SIDEWALKS	2778 SF
DETENTION AREAS	48,384 SF
EXISTING PAVED AREA	48,874 SF
NEW PAVED AREA	7140 SF
TOTAL BUILDING COVERAGE (DOES NOT INCLUDED 2ND FLR."1")	47,439 SF = 23%
TOTAL IMPERVIOUS AREA	107,155 SF = 52.4%
BUILDING AND PAVED AREAS (47,439 SF BLDG. + 60,516 SF HARDSCAPE)	
TOTAL PERVIOUS AREA	97,757 SF = 47.6%

HARVARD • JOLLY
ARCHITECTURE
Ft. Lauderdale 954-485-7910
Ft. Myers 239-275-7774
Jacksonville 904-398-3300
Orlando 407-422-7772
Punta Gorda 941-575-0403
St. Petersburg 727-896-4811
Tampa 813-286-8206
Tallahassee 850-478-4457
AA0003119
www.harvardjolly.com
WEST PALM BEACH, FL.

NEW CLASSROOM BUILDING
RIVIERA BEACH MARITIME ACADEMY
RIVIERA BEACH, FLORIDA
CONTRUCTION DOCUEMENTS

Contr. No 214031.00
Date 09-24-14
Drawn:
Revised:

copyright 2014

René Tercilla AIA, REFP

G1.1

P:\TD042 DD\pdfs\G1.1.dwg, 9/25/2014 1:52:37 PM

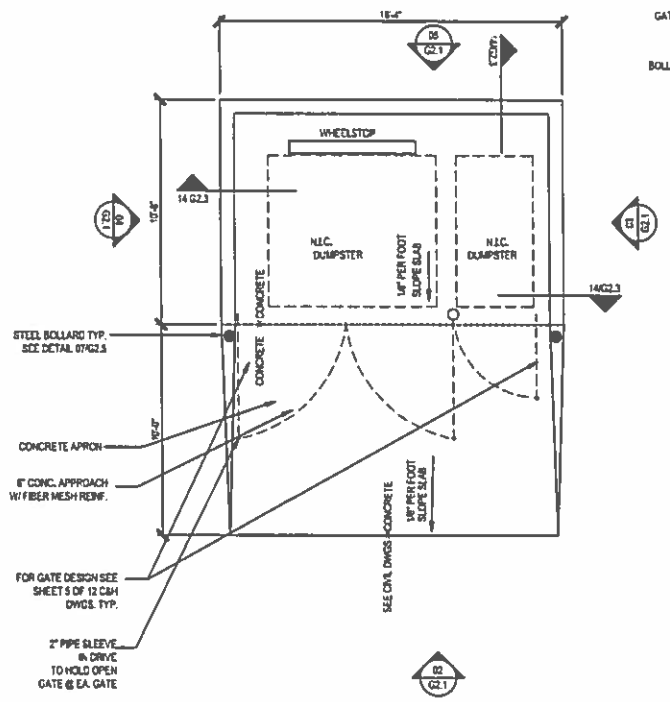

01 DUMPSTER ENCLOSURE PLAN

SCALE: 1/4"= 1'-0"

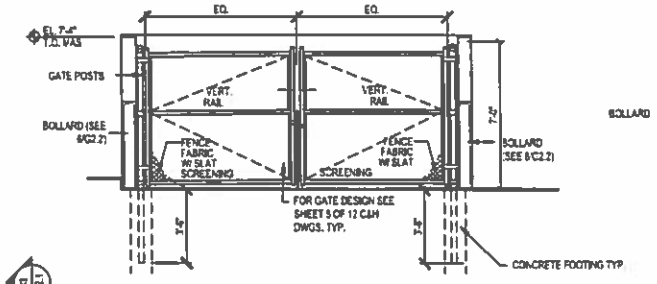

02 DUMPSTER ENCLOSURE ELEVATION

SCALE: 1/4"= 1'-0"

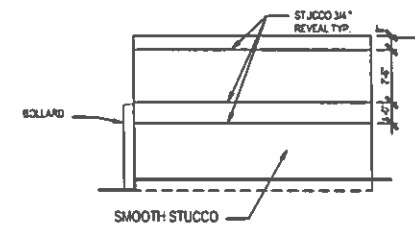

03 DUMPSTER ENCLOSURE ELEVATION

SCALE: 1/4"= 1'-0"

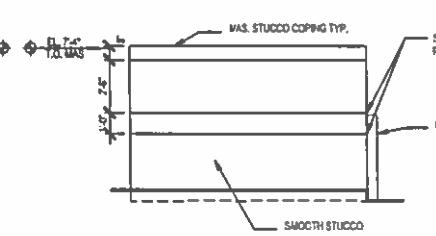

04 DUMPSTER ENCLOSURE ELEVATION

SCALE: 1/4"= 1'-0"

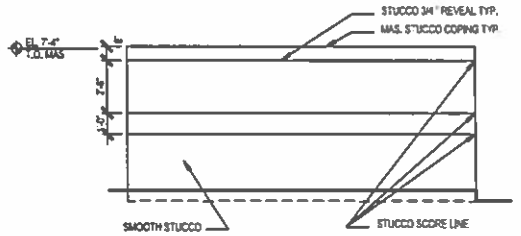

05 DUMPSTER ENCLOSURE ELEVATION

SCALE: 1/4"= 1'-0"

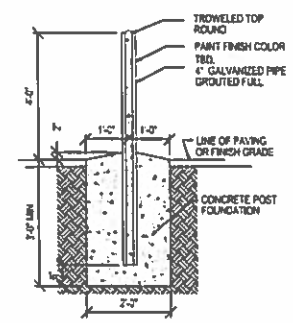

06 BOLLARD DETAIL

SCALE: 1/2"= 1'-0"

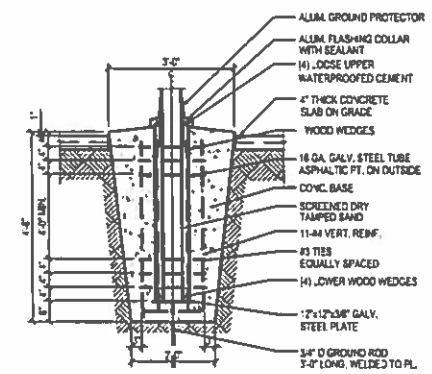

07 FLAG POLE DETAIL

SCALE: 1/2"= 1'-0"

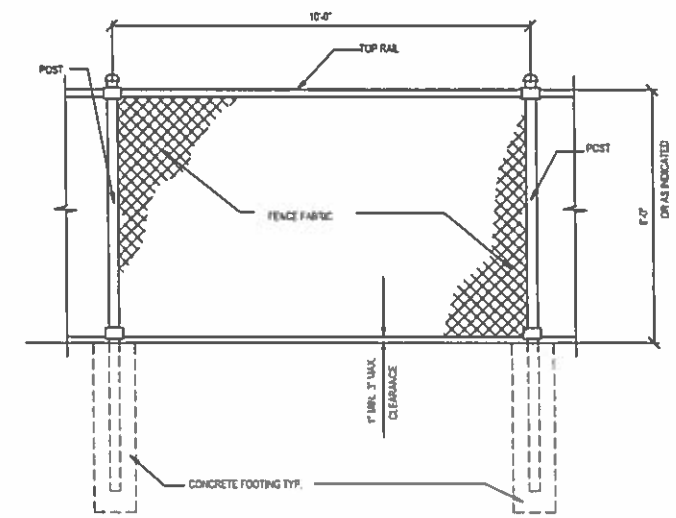

08 TYPICAL FENCE DETAIL

SCALE: 1/2"= 1'-0"

STANDARD PARKING SPACE DETAIL

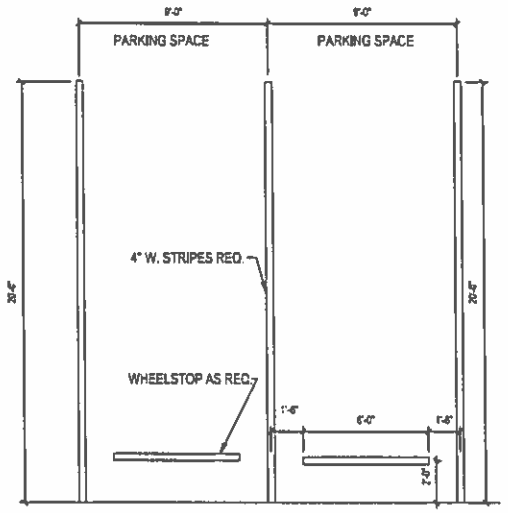

ACCESSIBLE PARKING SPACE DETAIL

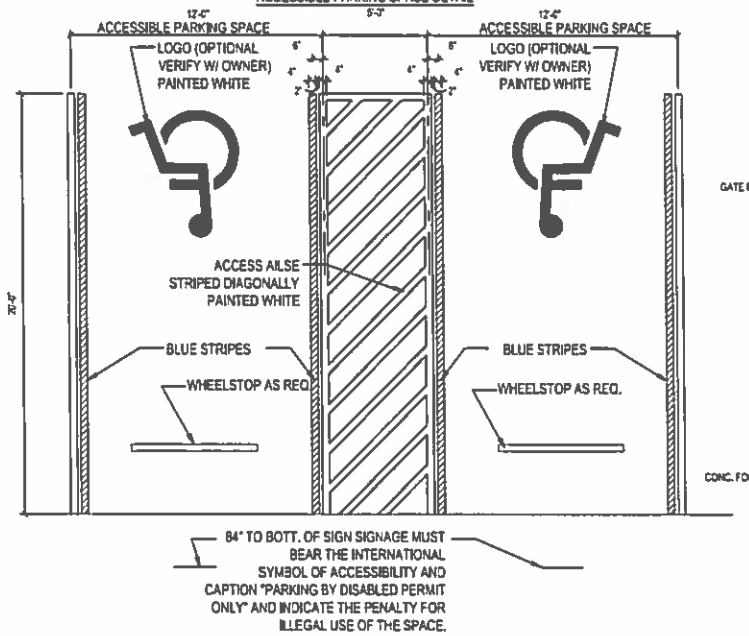

10 TYPICAL PARKING SPACE DETAILS

SCALE: 1/4"= 1'-0"

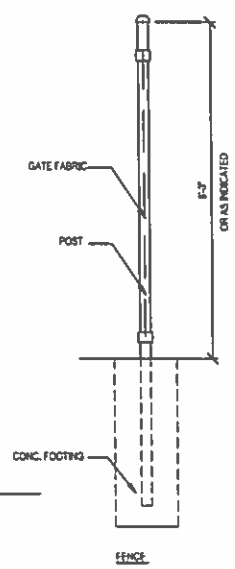

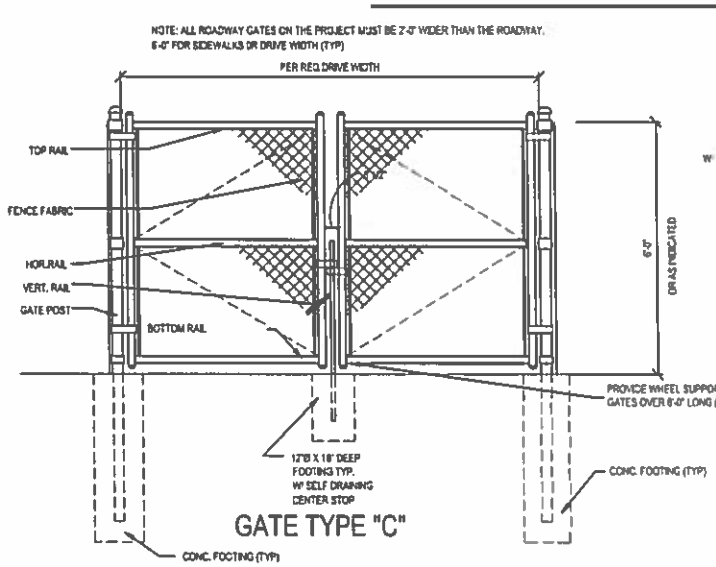

GATE TYPE "C"

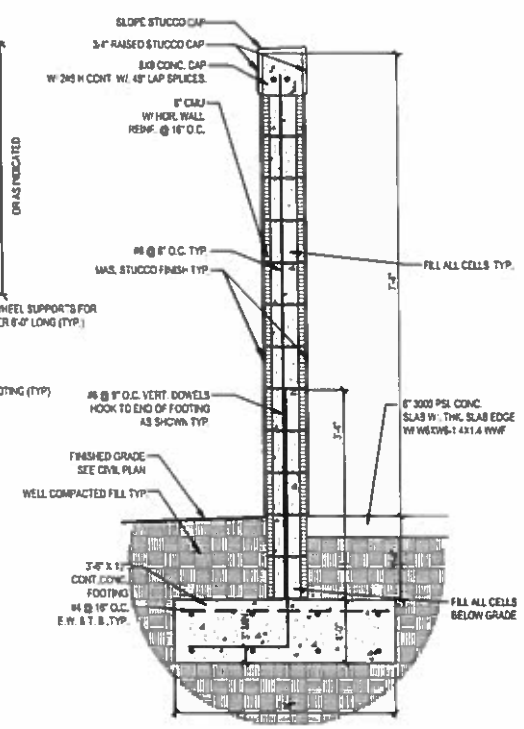

11 TYPICAL FENCE DETAILS

SCALE: 1/2"= 1'-0"

09 SIGN DETAIL

SCALE: 1"= 1'-0"

12 WALL SECTION @ DUMPSTER

SCALE: 3/4"= 1'-0"

HARVARD•JOLLY ARCHITECTURE

Ft. Lauderdale 954-486-7910
Ft. Myers 239-275-7774
Jacksonville 904-399-3000
Orlando 407-422-7772
Punta Gorda 941-575-0403
St. Petersburg 727-896-4911
Tampa 813-286-6208
West Palm Beach 561-478-4467
AA0003119
www.HarvardJolly.com
WEST PALM BEACH, FL

NEW CLASSROOM BUILDING
RIVIERA BEACH MARITIME ACADEMY
RIVIERA BEACH, FLORIDA
CONTRUCTION DOCUEMENTS

Comm. No: 214031.00
Date: 09-24-14
Drawn: .
Revised:

copyright 2014

René Tercilla AIA, REFP

G2.1

P:\1700-42 DD\dwg\G2.1.dwg, 9/25/2014 1:53:03 PM

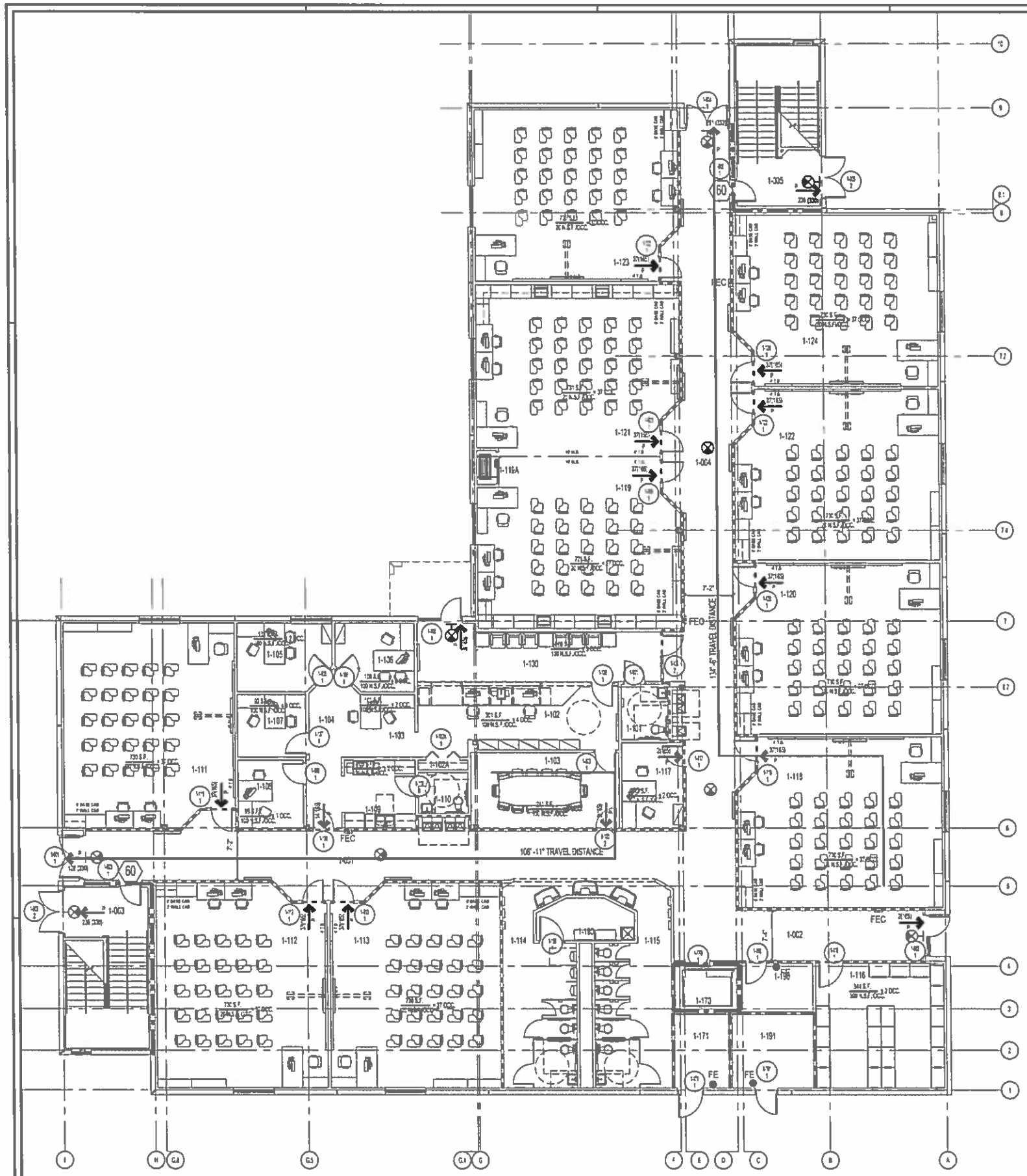

01 1st FLOOR LIFE SAFETY PLAN

SCALE: 1/8" = 1'-0"

CODE & LIFE SAFETY INFORMATION

FBC 2012 : EDUCATION

1st FLOOR = 14,236 SF
2nd FLOOR + 13,502 SF
GROSS s.f. ("TOTAL) = 27,698 S.F.

OCCUPANCY REQUIREMENTS:
CLASSROOM 20 SF PER PERSON
LAB 50 SF PER PERSON
ACCESSORY USE
a. BUSINESS NC SF PER PERSON
b. STORAGE 300 SF PER PERSON
c. ASSEMBLY 7 5"& 15 SF PER PERSON

CHP. 5- DESIGN DATA:
TYPE IIB CONSTRUCTION
(2) STORY
SPRINKLERED
OCCUPANCY EDUCATION (E) & BUSINESS (B)
LIFE SAFETY OCCUPANCY 304 1ST FLOUR; 4 N 2ND FLR. (E); +(2) 5" AFT (B) INCLUDED IN 1ST & 2ND F.A. COUNTS
PER FBC 903.3.4 AUTOMATIC SPRINKLER (NFPA 13R) STM INCREASE 6 = 200% X 14,500 SF = 14,500 SF A-1 DIVIDE E FROM TABLE 503 = 43,500 SF TOTAL, ALLOWED PER FLR FOR A "NO STORY" BLDG. PER CODE, FROM TABLE 503.

CHP. 6- CONSTRUCTION REQUIREMENTS:
a. STRUCTURAL FRAME 0 HR. RATING REQUIRED
b. BEARING WALLS 0 HR. RATING REQUIRED
c. FLOOR 0 HR. RATING REQUIRE
d. ROOF 0 HR. RATING REQUIRED
e. FULLY SPRINKLERED

CHP. 10 - MEANS OF EGRESS REQUIREMENTS:
- 60% 0.2 INCH PER OCCUP. FOR TORE BE COMPONENTS
- 0.3 INCH PER OCCUP. FOR STAIRWAYS
a. CORRIDORS 0.2 INCH PER OCC.P. X 238 = 3'-11.5" REQ.
7'-2" WIDE CORRIDORS PROVIDED
b. STAIRWAYS 0.3 INCH PER OCC.P. X 238 OCC.P. = 8'-11.38" REQ
2'6"-11.5" WIDE STAIRWAYS PROVIDED

CHP. 9 - FIRE & SMOKE PROTECTION:
a. STAIR ENCLOSURE 1 HR. RATING REQUIRED
b. ELEVATOR ENCLOSURE 1 HR. RATING REQUIRED
c. CORRIDOR WALLS SMOKE PARTITION AS THIS REQUIRED PER TABLE 918
d. EXIT ENCLOSURE 1 HR. RATING REQUIRED PER CHP. 1022
e. FULLY SPRINKLERED

LIFE SAFETY SYSTEM:
Emergency Lighting and Exit Signs ■ Yes ☐ No
Fire Alarm and Smoke Detection Systems ■ Yes ☐ No
Panic Hardware ■ Yes ☐ No

EXIT REQUIREMENTS:
Dead end limit maximum condition 20 Feet
Travel distance to exit maximum condition 200 Feet

LIFE SAFETY SYMBOLS LEGEND

1 HOUR FIRE RATED WALL. ALL OPENINGS AND MECHANICAL PENETRATIONS SHALL BE PROTECTED TO MAINTAIN THE INTEGRITY OF THE FIRE RATING FOR THE WALL. REFER TO WALL TYPES FOR UL NUMBERS

SMOKE PARTITION CONSTRUCTED WALL. ALL OPENINGS AND MECHANICAL PENETRATIONS SHALL BE PROTECTED TO MAINTAIN THE INTEGRITY OF THE SMOKE PARTITION CONSTRUCTION FOR THE WALL. REFER TO WALL TYPES FOR UL NUMBERS

P — PRIMARY MEANS OF EGRESS

EMERGENCY EXIT LIGHT TWO SIDED W/ DIRECTION ARROW

EMERGENCY EXIT LIGHT (WALL MTD.) W/ DIRECTION ARROW

XX(XX) — OCCUPANT LOAD / OPENING EGRESS CAPACITY

FEC — FIRE EXTINGUISHER & CABINET

FE — WALL HUNG FIRE EXTINGUISHER

60 — DOOR FIRE RATING IN MINUTES

NOTES:
1. ALL PENETRATIONS OF RATED WALLS, WALL EXTENSIONS, FLOOR AND ROOF SHALL BE CONSTRUCTED IN ACCORDANCE WITH A UL SYSTEM. ALTERNATE OR ADDITIONAL PENETRATION PROTECTION SYSTEMS MUST BE TEST CERTIFIED AND SUBMITTED AS A SHOP DWG FOR REVIEW.
2. PROVIDE STENCILING ON WALLS ABOVE CEILING FOR PROTECTED WALLS STATING "1 HR. OR 2 HR.FIRE RATED WALL. PROTECT ALL OPENINGS" (TYPICAL FOR ALL RATED WALLS), PROVIDE 4"H. X 1/2" W. LETTERS & IDENTIFICATION SHALL BE 15' E.C. HORIZONTAL ON THE WALLS TYP.

FIRE EXTINGUISHERS
PROVIDE FOR ROOMS SHOWN ON THE PLANS.
1. FLAMMABLE AREAS (SODIUM BICARBONATE 4C BC)
DUPLICATING STATIONS
2. HAZARDOUS AREAS (4A-60BC)
STORAGE ROOMS WHERE WOOD OR PAPER PRODUCTS ARE STORED
ELECTRICAL ROOMS
3. LOW HAZARD AREAS (2A- 10BC)
CORRIDORS AND REMAINING ROOMS
CLASS A OR B FIRE AREAS

ROOM CHART

ROOM NO.	ROOM NAME	SF	ROOM NO.	ROOM NAME	SF
1-001	CORRIDOR	699	1-205	CLASSROOM	735
1-002	CORRIDOR	291	1-206	IT LAB	636
1-003	STAIR	299	1-207	CLASSROOM	730
1-004	CORRIDOR	1875	1-208	IT LAB	623
1-005	STAIR	299	1-209	CLASSROOM	731
1-006	CORRIDOR	775	1-209A	STORAGE	87
1-007	CORRIDOR	1086	1-210	RESTROOM -BOYS	294
			1-211	RESTROOM -GIRLS	384
1-100	RECEPTION	203	1-212	CLASSROOM	740
1-101	RESTROOM	57	1-213	TEACHER PLANNING	120
1-102	ADMINISTRATION	391	1-213A	RESTROOM	44
1-102A	STORAGE	19	1-214	CLASSROOM	730
1-103	ADMINISTRATION	181	1-215	CONFERENCE	213
1-104	CORRIDOR	111	1-216	CLASSROOM	730
1-105	PRINCIPAL	132	1-217	CLASSROOM	730
1-106	GUIDANCE	169	1-218	CLASSROOM	730
1-107	BUSINESS MANAGER	92	1-219	CLASSROOM	730
1-108	GUIDANCE	96	1-220	CLASSROOM	730
1-109	WORK ROOM	106	1-280	CUSTODIAL	85
1-110	RESTROOM	44	1-290	DATA	183
1-111	CLASSROOM	730			
1-112	CLASSROOM	730			
1-113	CLASSROOM	730			
1-114	RESTROOM-BOYS	294			
1-115	RESTROOM-GIRLS	384			
1-116	STORAGE	344			
1-117	ASSISTANT PRINCIPAL	113			
1-118	CLASSROOM	730			
1-119	CLASSROOM-SCIENCE	731			
1-120	CLASSROOM	730			
1-121	CLASSROOM-SCIENCE	731			
1-122	CLASSROOM	730			
1-123	CLASSROOM	730			
1-124	CLASSROOM	730			
1-170	ELEVATOR	52			
1-171	ELEVATOR EQUIPMENT	65			
1-180	CUSTODIAL	80			
1-190	DATA	73			
1-191	ELECTRICAL	125			

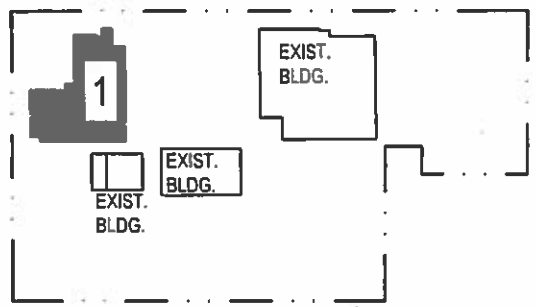

KEY PLAN

SCALE: N.T.S.

HARVARD•JOLLY
ARCHITECTURE
Ft. Lauderdale 954-486-7910
Ft. Myers 239-275-7774
Jacksonville 904-399-3300
Orlando 407-872-0777
Punta Gorda 941-575-0403
St. Petersburg 727-896-4611
Tampa 813-238-8201
Wellington, Palm Beach 561-478-4457
AA0000119
www.HarvardJolly.com
WEST PALM BEACH, FL.

NEW CLASSROOM BUILDING
RIVIERA BEACH MARITIME ACADEMY
RIVIERA BEACH, FLORIDA
CONTRUCTION DOCUEMENTS

Comm. No 214031.00
Date 09-24-14
Drawn:
Revised:

copyright 2014

René Tercilla AIA, REFP

LS1.1

P:\71042 CDs\ls\LS1.1.dwg 10/6/2014 3:07:53 PM

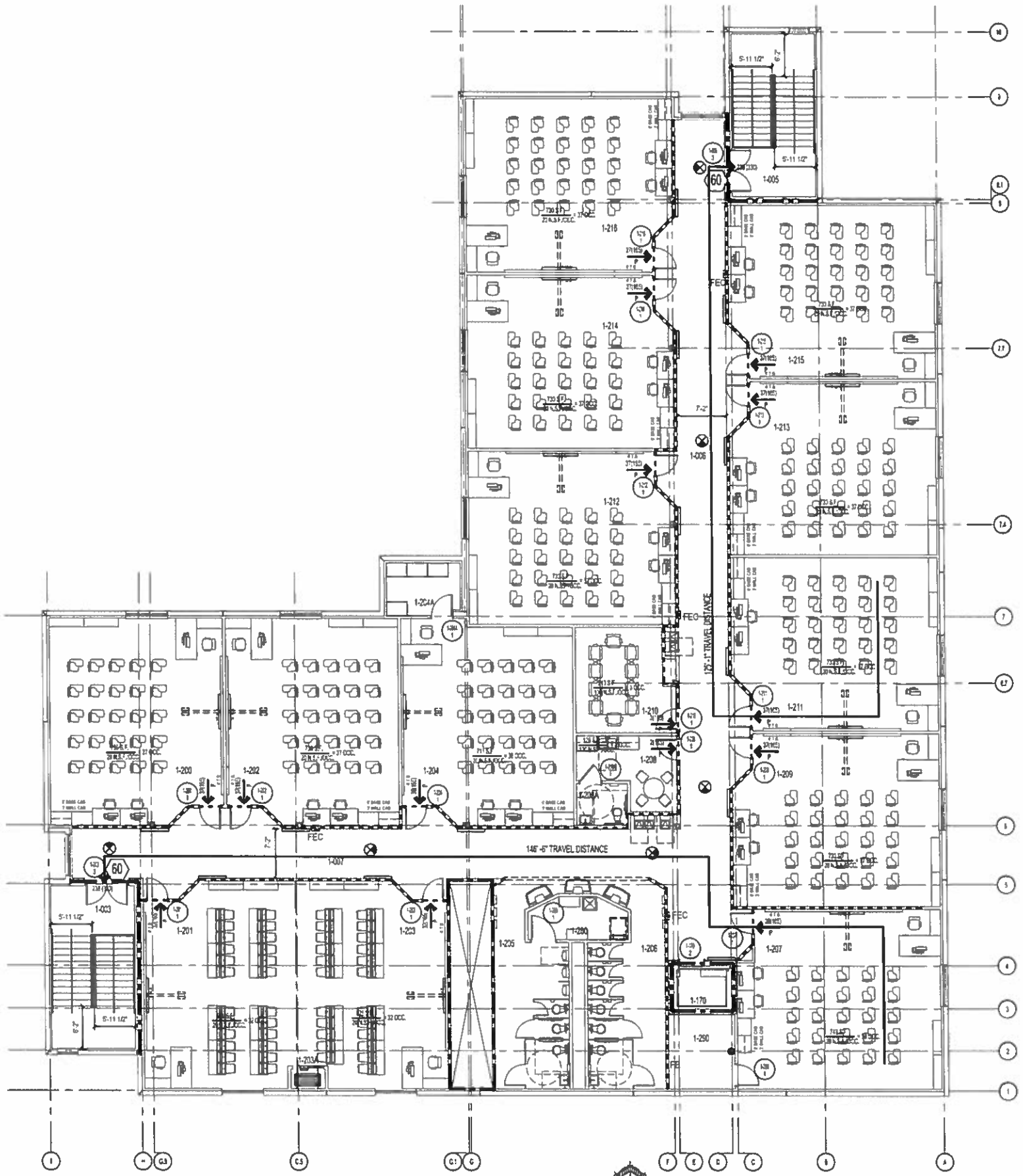

01 2ND FLOOR LIFE SAFETY PLAN

SCALE: 1/8" = 1'-0"

CODE & LIFE SAFETY INFORMATION

FBC 2010 EDUCATION

1st FLOOR = 14,236 SF
2nd FLOOR = 13,502 SF
GROSS s.f. (TOTAL) = 27,698 S.F.

CHP 5- DESIGN DATA:
TYPE IB CONSTRUCTION
(2) STORY
SPRINKLERED
OCCUPANCY (EDUCATION (E) & BUSINESS (B))
LIFE SAFETY OCCUPANCY 364 (1ST FLOOR), 449 (2ND FLR. 3) (237 S'AFT (B) INCLUDED IN 1ST & 2ND F.R. COUNTS)
1- PER FBC 903.3.4 AUTOMATIC SPRINKLER (IF SYSTEM INCRR ASE 1 = 300% X 14,236 SF = 14,236 SF A.) OWABLE FROM TABLE 503 = 42,708 SF TOTAL ALLOWED PER HUR FOR A TWO STORY BLDG. HUR CODE, FROM TABLE 503.

OCCUPANCY REQUIREMENTS
CLASSROOM 20 SF PER PERSON
LAB 50 SF PER PERSON
ACCESSORY USE
a. BUSINESS 100 SF PER PERSON
b. STORAGE 300 SF PER PERSON
c. ASSEMBLY 15 SF IN 5 SF PER PERSON

CHP. 6- CONSTRUCTION REQUIREMENTS
a. STRUCTURAL FRAME 0 HR. RATING REQUIRED
b. BEARING WALLS 0 HR. RATING REQUIRED
c. FLOOR 0 HR. RATING REQUIRED
d. ROOF 1 HR. RATING REQUIRED
e. FULLY SPRINKLERED

CHP. 10 - MEANS OF EGRESS REQUIREMENTS
*ECS.1 .2 INCH PER OCCUP. FOR FOREIGN COMPONENTS
.3 INCH PER OCCUP. FOR STAIRWAYS
a. CORRIDORS .2 INCH PER OCCUP.X 250 = 3'-11 1/2" REQ.
7'-2" WIDE CORRIDORS PROVIDED
b. STAIRWAYS .3 INCH PER OCCUP.X 250 OCCUP. = 5'-11 1/2" REQ.
2@ = 5'-2" WIDE STAIRWAYS PROVIDED

CHP. 9 - HRS & SMOKE PARTITIONS
a. STAIR ENCLOSURE 1 HR. RATING REQUIRED
b. ELEVATOR ENCLOSURE HR. RATING REQUIRED
c. CORRIDOR WALLS SMOKE PARTITION PER TABLE 918.1
d. EXIT ENCLOSURE 1 HR. RATING REQUIRED PER CHP. 1022
e. FULLY SPRINKLERED

LIFE SAFETY SYSTEM:
Emergency Lighting and Exit Signs ■ Yes ☐ No
Fire Alarm and Smoke Detection Systems ■ Yes ☐ No
Panic Hardware ■ Yes ☐ No

EXIT REQUIREMENTS
Dead end limit-maximum condition 20 Feet
Travel distance to limit-maximum condition 200 Feet

LIFE SAFETY SYMBOLS LEGEND

1 HOUR FIRE RATED WALL. ALL OPENINGS AND MECHANICAL PENETRATIONS SHALL BE PROTECTED TO MAINTAIN THE INTEGRITY OF THE FIRE RATING FOR THE WALL. REFER TO WALL TYPES FOR UL NUMBERS

SMOKE PARTITION CONSTRUCTED WALL. ALL OPENINGS AND MECHANICAL PENETRATIONS SHALL BE PROTECTED TO MAINTAIN THE INTEGRITY OF THE SMOKE PARTITION CONSTRUCTION FOR THE WALL. REFER TO WALL TYPES FOR UL NUMBERS

P — PRIMARY MEANS OF EGRESS

EMERGENCY EXIT LIGHT TWO SIDED W/ DIRECTION ARROW

EMERGENCY EXIT LIGHT (WALL MTD.) W/ DIRECTION ARROW

OCCUPANT LOAD

XXX(XX) — OPENING EGRESS CAPACITY

FEC — FIRE EXTINGUISHER & CABINET

FE — WALL HUNG FIRE EXTINGUISHER

60 — DOOR FIRE RATING IN MINUTES

NOTES
1. ALL PENETRATIONS OF RATED WALLS, WALL EXTENSIONS, FLOOR AND ROOF SHALL BE CONSTRUCTED IN ACCORDANCE WITH A UL SYSTEM. ALTERNATE OR ADDITIONAL PENETRATION PROTECTION SYSTEMS MUST BE TEST CERTIFIED AND SUBMITTED AS A SHOP DWG FOR REVIEW.
2. PROVIDE STENCILING ON WALLS ABOVE CEILING FOR PROTECTED WALLS STATING "1 HR. OR 2 HR.FIRE RATED WALL. PROTECT ALL OPENINGS" (TYPICAL FOR ALL RATED WALLS). PROVIDE 4"H. X 1/2" W. LETTERS & IDENTIFICATION SHALL BE 10' O.C. HORIZONTAL ON THE WALLS TYP.

FIRE EXTINGUISHERS
PROVIDE FOR ROOMS SHOWN ON THE PLANS.
1. FLAMMABLE AREAS (SODIUM BICARBONATE 40 BC)
DUPLICATING STATIONS
2. HAZARDOUS AREAS (4A-40BC)
STORAGE ROOMS WHERE WOOD OR PAPER PRODUCTS ARE STORED
ELECTRICAL ROOMS
3. LOW HAZARD AREAS (2A- 10BC)
CORRIDORS AND REMAINING ROOMS
CLASS A OR B FIRE AREAS

ROOM CHART

ROOM NO.	ROOM NAME	SF	ROOM NO.	ROOM NAME	SF
1-201	CORRIDOR	896	1-206	CLASSROOM	720
1-202	CORRIDOR	291	1-207	IT LAB	630
1-203	STAIR	299	1-208	CLASSROOM	730
1-204	CORRIDOR	1875	1-209	IT LAB	625
1-205	STAIR	298	1-210	CLASSROOM	711
1-206	CORRIDOR	725	1-210A	STORAGE	57
1-207	CORRIDOR	1085	1-209	RESTROOM-BOYS	294
			1-208	RESTROOM-GIRLS	305
1-100	RECEPTION	399	1-207	CLASSROOM	749
1-101	RESTROOM	52	1-206	TEACHER PLANNING	126
1-102	ADMINISTRATION	391	1-205A	RESTROOM	44
1-102A	STORAGE	10	1-205	CLASSROOM	739
1-103	ADMINISTRATION	161	1-210	CONFERENCE	213
1-104	CORRIDOR	111	1-211	CLASSROOM	736
1-105	PRINCIPAL	122	1-212	CLASSROOM	738
1-106	GUIDANCE	109	1-213	CLASSROOM	736
1-107	BUSINESS MANAGER	92	1-214	CLASSROOM	736
1-108	GUIDANCE	96	1-215	CLASSROOM	739
1-109	WORK ROOM	108	1-216	CLASSROOM	736
1-110	RESTROOM	44			
1-111	CLASSROOM	730	1-289	CUSTODIAL	88
1-112	CLASSROOM	730	1-290	DATA	183
1-113	CLASSROOM	730			
1-114	RESTROOM-BOYS	294			
1-115	RESTROOM-GIRLS	305			
1-116	STORAGE	344			
1-117	ASSISTANT PRINCIPAL	115			
1-118	CLASSROOM	730			
1-119	CLASSROOM-SCIENCE	721			
1-120	CLASSROOM	730			
1-121	CLASSROOM-SCIENCE	731			
1-122	CLASSROOM	730			
1-123	CLASSROOM	730			
1-124	CLASSROOM	730			
1-170	ELEVATOR	52			
1-171	ELEVATOR EQUIPMENT	36			
1-189	CUSTODIAL	80			
1-190	DATA	73			
1-191	ELECTRICAL	128			

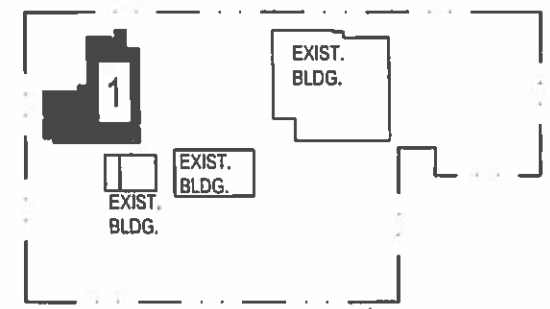

KEY PLAN

SCALE: N.T.S.

HARVARD•JOLLY
ARCHITECTURE
Ft Lauderdale 954-486-7910
Ft Myers 239-275-7774
Jacksonville 904-399-3300
Orlando 407-422-7772
Punta Gorda 941-575-0403
St Petersburg 727-896-4611
Tampa 813-286-8201
West Palm Beach 561-478-4457
AA0003119
www.HarvardJolly.com
WEST PALM BEACH, FL

NEW CLASSROOM BUILDING
RIVIERA BEACH MARITIME ACADEMY
RIVIERA BEACH, FLORIDA
CONTRUCTION DOCUEMENTS

Comm. No: 214031.00
Date: 09-24-14
Drawn:
Revised:

copyright 2014

Rand Torcilla AIA, REFP

LS1.2

P:\TD042 DOWN\LS1.2.dwg, 10/6/2014 3:08:08 PM

GENERAL MECHANICAL NOTES

1. THE CONTRACTOR SHALL FURNISH ALL LABOR, MATERIALS AND EQUIPMENT NECESSARY FOR THE INSTALLATION OF A COMPLETE AND OPERABLE SYSTEM IN ACCORDANCE WITH THESE DOCUMENTS, THE APPLICABLE BUILDING CODES AND ALL OTHER APPLICABLE STATE, COUNTY AND LOCAL ORDINANCES AND THE LATEST EDITION OF THE FOLLOWING PUBLICATIONS, FLORIDA BUILDING CODE-MECHANICAL, SMACNA, ASHRAE, NFPA 90A, 90B, 91 & ANSI B-9.1 MECHANICAL REFRIGERATION.
2. THE MECHANICAL PLANS IN GENERAL, ARE DIAGRAMMATIC IN NATURE, AND ARE TO BE READ IN CONJUNCTION WITH ARCHITECTURAL, PLUMBING, ELECTRICAL AND STRUCTURAL PLANS AND SHALL BE CONSIDERED AS ONE SET OF DOCUMENTS. DUCT AND PIPING OFFSETS, BENDS AND TRANSITIONS WILL BE REQUIRED TO PROVIDE AND INSTALL A COMPLETE FUNCTIONAL SYSTEM AND SHALL BE PROVIDED BY THE CONTRACTOR AT NO ADDITIONAL COST TO THE OWNER. CHANGES IN DUCTWORK SIZE AND ROUTE WILL BE REQUIRED TO AVOID STRUCTURAL, PLUMBING, FIRE SPRINKLER AND ARCHITECTURAL BUILDING FEATURES. DUCTWORK CHANGES MAY BE MADE BY CONTRACTOR USING EQUIVALENT SIZED DUCT. CONTACT ENGINEER IN WRITING IF MECHANICAL SYSTEMS WILL NOT FIT IN AREA ALLOTTED.
3. ALL INSTALLATIONS LOCATED WITHIN 3,000 FT FROM THE OCEAN SHALL UTILIZE NON-FERROUS MATERIALS FOR ALL OUTDOOR EXPOSED SUPPORTS, STANDS, FASTENERS, STRAPS, TIE DOWNS, CABLES, ANCHORS, SCREWS, ETC.
4. THE CONTRACTOR SHALL BE HELD TO HAVE VERIFIED ALL EXISTING CONDITIONS, INCLUDING REVIEW OF AS BUILT DOCUMENTATION IF APPLICABLE, PRIOR TO BIDDING, ORDERING, FABRICATION OR INSTALLATION OF MATERIALS OR EQUIPMENT ON THIS PROJECT.
5. THE CONTRACTOR SHALL PAY ALL COSTS OF PERMIT, INSPECTIONS AND ALL OTHER COSTS INCIDENTAL TO THE COMPLETION AND TESTING OF THIS WORK.
6. ENGINEER OF RECORD RECOGNIZES THE GENERAL CONTRACTOR AND ALL OTHER SUB-CONTRACTORS TO BE LICENSED IN THE STATE OF FLORIDA. GENERAL CONTRACTOR SHALL CONSIDER THE PROJECT AS ONE SET OF DOCUMENTS. GENERAL CONTRACTOR SHALL PROVIDE AN ENTIRE SET OF DOCUMENTS SHOWING ALL TRADES TO EACH SUBCONTRACTOR PRIOR TO BIDDING AND CONSTRUCTION. GENERAL CONTRACTOR SHALL COORDINATE WITH ALL OTHER CONTRACTORS TO INFORM ARCHITECT/ENGINEER OF ANY DISCREPANCIES OR POSSIBLE CONFLICTS ON THE DOCUMENTS PRIOR TO SUBMITTING FINAL BID AND COMMENCING ANY WORK. CONTRACTOR SHALL MAKE HIMSELF AVAILABLE FOR REVIEWING DOCUMENTS WITH ARCHITECT/ENGINEER UPON REQUEST.
7. THE CONTRACTOR SHALL VISIT THE SITE AND COORDINATE WORK WITH OTHER TRADES.
8. THE CONTRACTOR SHALL SUPPLY THE ENGINEER WITH "AS-BUILT" REDLINE DRAWINGS, UPON COMPLETION OF THE PROJECT AND AUTOCAD SHOP DRAWING FILES (IF APPLICABLE).
9. CONTRACTOR SHALL SUBMIT, FOR APPROVAL ELECTRONIC PDF COPIES OF MANUFACTURER'S DRAWINGS FOR EACH PIECE OF EQUIPMENT AND CONTROLS INCLUDED IN CONTRACT. ALL MATERIAL SHALL BE NEW OF U.S. MANUFACTURER OF GOOD QUALITY. ALL WORK SHALL BE PERFORMED IN A WORKMANLIKE MANNER BY SKILLED TRADESMEN.
10. THE GENERAL CONTRACTOR SHALL PROVIDE IN WRITING AND ON COMPANY LETTER HEAD, ALL ITEMS VALUE ENGINEERED OR OMITTED FROM PROJECT BIDS. THIS DOCUMENT SHALL HAVE DETAILED DESCRIPTION AND TRANSPARENCY OF ALL ITEMS IN EACH DISCIPLINE AND FOR EACH TRADE. INFORMATION SHALL BE PROVIDED TO ARCHITECT AND ENGINEER FOR REVIEW PRIOR TO SUBMITTING FINAL BID. CONTRACTOR SHALL MAKE HIMSELF AVAILABLE FOR REVIEWING DOCUMENTS WITH ARCHITECT/ENGINEER/OWNER UPON REQUEST.

DUCTWORK:

11. ALL LOW PRESSURE SUPPLY DUCTS DOWNSTREAM OF THE VAV'S & RETURN DUCT WORK SHALL BE CONSTRUCTED OF RIGID GLASS-FIBER BOARDS WITH EDGE TREATMENT. FACTORY MOLDED AND FACED ON ONE SIDE WITH FIRE RETARDING, REINFORCED, FOIL-SCRIM-KRAFT BARRIER EQUAL TO CERTAINTEED ULTRA*DUCT™ BLACK DUCT BOARD. THE BOARD SHALL BE UL LISTED AND LABELED AS COMPLYING WITH UL 181 CLASS 1. THE FLEXURAL RIGIDITY (EI) SHALL BE 475, STANDARD DUTY 1" (R-4.3) FOR USE IN CONDITIONED SPACE AND 800 1-1/2" (R-6) FOR USE IN UNCONDITIONED SPACE. INSTALL DUCTS AND FITTINGS IN ACCORDANCE NAIMA'S "FIBROUS GLASS DUCT CONSTRUCTION STANDARDS" OR SMACNA'S "FIBROUS GLASS DUCT CONSTRUCTION STANDARDS".
12. ALL MEDIUM PRESSURE SUPPLY DUCTS SHALL BE CONSTRUCTED OF SINGLE WALL SPIRAL GALVANIZED SHEET STEEL FABRICATED FOR 4" WG ESP WITH EXTERNAL R-6 DUCT WRAP INSULATION; CONFORMING TO ASTM A90, A568, A653, A924. FABRICATE DUCTS, ELBOWS, TRANSITIONS, OFFSETS, BRANCH CONNECTIONS AND OTHER CONSTRUCTIONS ACCORDING TO SMACNA'S "HVAC DUCT CONSTRUCTION STANDARDS - METAL AND FLEXIBLE". COMPLY WITH REQUIREMENTS FOR METAL THICKNESS, REINFORCING TYPES AND INTERVALS, TIE-ROD APPLICATIONS, AND JOINT TYPES AND INTERVALS.
13. FLEXIBLE DUCT SHALL COMPLY UL 181 CLASS 1, FACTORY FABRICATED, INSULATED, ROUND DUCT, WITH A POLYETHYLENE FILM OUTER JACKET ENCLOSING GLASS FIBER INSULATION (R-6) AROUND A CONTINUOUS POLYETHYLENE INNER LINER. THE INNER LINER SHALL HAVE AN ENCAPSULATED STEEL WIRE HELIX. FLEXIBLE DUCT SHALL BE INSTALLED IN ACCORDANCE WITH NAIMA'S "FIBROUS GLASS DUCT CONSTRUCTION STANDARDS" INSULATION SHALL BE 1" (R-4.3) FOR USE IN CONDITIONED SPACE AND 1 1/2" (R-6) FOR USE IN UNCONDITIONED SPACE. LIMIT FLEXIBLE DUCT RUNS TO 15 FEET. PROVIDE TRANSITION BOXES AS NEEDED.
14. ALL OUTSIDE AIR AND EXHAUST DUCTS AND FITTINGS SHALL BE SHALL BE CONSTRUCTED OF GALVANIZED SHEET STEEL, LOCK- FORMING QUALITY: ASTM A653/A 653M, COATING DESIGNATION, MIL-PHOSPHATIZED FINISH FOR SURFACES OF DUCT EXPOSED TO VIEW. FABRICATE DUCTS, ELBOWS, TRANSITIONS, OFFSETS, BRANCH CONNECTIONS AND OTHER CONSTRUCTIONS ACCORDING TO SMACNA'S "HVAC DUCT CONSTRUCTION STANDARDS - METAL AND FLEXIBLE". COMPLY WITH REQUIREMENTS FOR METAL THICKNESS, REINFORCING TYPES AND INTERVALS, TIE-ROD APPLICATIONS, AND JOINT TYPES AND INTERVALS.
15. EXTERNAL DUCT INSULATION SHALL BE A FLEXIBLE GLASS FIBER BLANKET EQUAL TO JOHNS MANVILLE MICROLITE XG FORMALDEHYDE-FREE FIBER GLASS DUCT WRAP. INSULATION SHALL BE FURNISHED WITH A FACTORY-APPLIED FACING WITH A COMPOSITE UL FHC RATING OF 25/50. WRAP INSULATION AROUND DUCT WITH FACING TO THE OUTSIDE SO THE 2" (51 MM) FLAP COMPLETELY OVERLAPS FACING AND INSULATION AT THE OTHER END OF STRETCH-OUT. INSULATION SHALL BE SNUGLY BUTTED. SECURE SEAMS WITH OUTWARD CLINCHING STAPLES PLACED APPROXIMATELY 6" (152 MM) ON CENTER. IF REQUIRED, SEAL SEAM WITH PRESSURE-SENSITIVE TAPE DESIGNED FOR USE WITH DUCT INSULATION. INSULATION ON THE UNDERSIDE OF DUCTS SPANNING 24" (610 MM) OR GREATER SHALL BE SECURED WITH MECHANICAL FASTENERS AND SPEED CLIPS SPACED APPROXIMATELY 18" (457 MM) ON CENTER. INSULATION SHALL BE 1" (R-4.3) FOR USE IN CONDITIONED SPACE AND 1 1/2" (R-6) FOR USE IN UNCONDITIONED SPACE. SHALL COMPLY WITH ASTM E84
16. ALL INSULATION WILL HAVE FIRE/SMOKE RATING LESS THAN 25/50.
17. LAVATORY EXHAUST DUCTS AND OUTSIDE AIR DUCTS SHALL BE GALVANIZED SHEET METAL WITH SEALED SEAMS AND JOINTS. ALL OUTSIDE AIR AND EXHAUST AIR DUCTS LOCATED IN AREAS WERE DEWPOINT CONDITIONS COULD OCCUR SHALL BE INSULATED WITH EXTERNAL BLANKET INSULATIONS WITH A MINIMUM OF R-6.
18. ALL OUTSIDE AIR DUCT INTAKES SHALL BE LOCATED BEYOND 10'-0" OF ANY VENTILATION OUTLET OR SANITARY VENT PIPE AND SHALL BE SCREENED WITH A CORROSION RESISTANT MATERIAL NOT LARGER THAN 1/2" MESH. ALL OUTSIDE AIR INTAKES SHALL BE MARKED WITH A PERMANENT PLATE TITLED "INTAKE FOR UNIT NUMBER(#)" PER FMC 2010, 401.5.1. (E.G. "INTAKE FOR AHU-1" "INTAKE FOR FCU-1-1" ETC.)
19. ALL EXHAUST AIR FANS AND VENTS SHALL BE LOCATED BEYOND 10'0" OF ANY OUTSIDE AIR INTAKE OR FAN. ALL EXHAUST AIR FANS SHALL BE MARKED WITH A PERMANENT PLATE TITLED "EXHAUST FAN FOR UNIT NUMBER(#) OR AREA" (E.G. "EF-1 FOR LOCKER ROOM", "EF-1-1 FOR GRD FL TOILET" ETC.)
20. ALL DUCT DIMENSIONS SHOWN ARE CLEAR INSIDE DIMENSIONS.
21. ALL AIR DEVICES (E.G., DIFFUSERS, REGISTERS AND GRILLES) SHALL BE ALL ALUMINUM CONSTRUCTION WITH EXPOSED SURFACE OFF WHITE BAKED ENAMEL FINISH OR AS SPECIFIED BY ARCHITECT. PROVIDE STEEL GRILLES FOR FIRE RATED DIFFUSERS IN FIRE RATED CEILINGS. PROVIDE OPPOSED BLADE DAMPERS AT ALL DIFFUSERS AND REGISTERS. PROVIDE MANUAL VOLUME DAMPERS WITH EXTRACTOR AT ALL FLEX TAKE-OFFS. PROVIDE REMOTE, CABLE OPERATED VOLUME DAMPERS IN INACCESSIBLE AND HARD CEILING AREAS, "YOUNG REGULATOR" OR EQUAL. COMPLY WITH FMC 2010, 601.4 AND 603.17 FOR BALANCED AIR FLOW.
22. ALL BRANCH TAKE-OFFS TO BE PROVIDED W/ MANUAL VOLUME DAMPERS. ALL ELBOWS AND TEE'S MUST BE FURNISHED W/TURNING VANES. PROVIDE MANUAL VOLUME DAMPERS WITH EXTRACTOR AT ALL FLEX TAKE-OFFS.

THERMOSTATS/CONTROLS:

23. CONTRACTOR SHALL PROVIDE A FULLY INTEGRATED BUILDING CONTROL SYSTEM TO CONTROL HVAC SYSTEM AND ALL OTHER SYSTEMS SHOWN ON CONTROL PLANS. PROVIDE BMS/EMS SYSTEMS AND/OR INTERFACES/GATEWAYS FOR ALL HVAC EQUIPMENT (WHERE APPLICABLE) TO BE CONNECTED TO CONTROL SYSTEMS. SYSTEM SHALL BE SIZED TO PROVIDE FUTURE EXPANSION AND ADDITIONAL CONTROL POINTS. MECHANICAL CONTRACTOR SHALL COORDINATE WITH CONTROL CONTRACTOR AND ELECTRICAL CONTRACTOR FOR ALL ELECTRICAL CONTROL REQUIREMENTS FOR SYSTEM. (E.G. POWER SERVICE, PANELS, POWER WIRING, CONTROL WIRING, CONDUITS, TESTING, ETC.) CONTRACTOR SHALL SUBMIT CONTROL DRAWINGS AND SPECIFICATIONS FOR ENGINEERS APPROVAL PRIOR TO INSTALLATION. PROVIDE FINALIZED CONTROL PLANS AND SYSTEM TRAINING TO OWNER/OPERATOR PRIOR TO OWNER ACCEPTANCE.
24. CONTRACTOR SHALL PROVIDE OWNER/BUILDING MANAGER/BUILDING ENGINEER WITH 40 HOURS OF ONSITE AND/OR OFF SITE TRAINING IN THE CONTROL AND OPERATION OF THE HVAC SYSTEM. TIME AND LOCATION TO BE DETERMINED BY CLIENT.
25. THERMOSTATS FOR VAV BOXES SHALL BE DDC. PROVIDE ROOM THERMOSTAT/SENSOR WITH OVERRIDE.
26. REFRIGERANT LINES SHALL BE COPPER, TYPE "L" HARD DRAWN WITH WROUGHT COPPER SOLDER-JOINT TYPE FITTINGS. USE 95/5 SOLDER. REFRIGERANT LINES SHALL SIZED AS PER MANUFACTURER RECOMMENDATIONS. ALL EXPOSED INSULATION SHALL BE PROTECTED FROM U.V. LIGHT WITH U.V. RESISTANT PAINT OR ALUMINUM SHIELDING.
27. SUCTION AND LIQUID LINES SHALL BE INSULATED WITH 3/4" CLOSED CELL NEOPRENE INSULATION ARMSTRONG "ARMAFLEX OR ARMACELL" OR EQUAL ENSURE THAT LIQUID LINE IS INSULATED IN ALL MINI SPLIT INSTALLATIONS.
28. FILTER/DRYER AND SITE GLASS SHALL BE PROVIDED ON LIQUID LINES
29. PROVIDE NEW FILTERS FOR ALL AIR CONDITIONING EQUIPMENT BEFORE STARTING THEM. REPLACE THEM PRIOR TO FINAL ACCEPTANCE BY OWNER.
30. PROVIDE PHOTO ELECTRIC TWIST IN TYPE SMOKE DETECTORS WITH ACCESS DOORS IN ALL FANS AND AHU'S SERVING A COMMON PLENUM OF 2000 CFM OR ABOVE. ALL SMOKE DETECTORS SHALL BE BY ONE MANUFACTURER, AND SHALL COMPLY WITH UL 268A LOCATE THE SMOKE DETECTORS IN THE SUPPLY AIR DUCT FOR INSTALLATIONS IN COMPLIANCE WITH THE THE FLORIDA BUILDING CODE. THE DETECTORS SHALL BE PROVIDED BY THE ELECTRICAL CONTRACTOR & INSTALL IN THE DUCT BY THE MECHANICAL CONTRACTOR. PROVIDE REMOTE TEST STATION. ELECTRICAL CONNECTION SHALL BE BY ELECTRICAL CONTRACTOR. UPON SMOKE DETECTION ALL ASSOCIATED AIR MOVING EQUIPMENT SERVING A COMMON PLENUM WILL BE SHUT DOWN. TIE FIRE ALARM DEVICES INTO EXISTING FIRE ALARM SYSTEM (IF APPLICABLE).
31. PROVIDE TYPE "B" DYNAMIC FIRE DAMPERS IN ALL DUCTS OR OPENINGS PENETRATING FIRE RATED ASSEMBLIES. PROVIDE RADIATION DAMPERS IN DIFFUSERS OF RATED CEILINGS.
32. ALL CONDENSATE DRAIN PIPING SHALL BE TYPE "L" HARD COPPER WITH 3/4" THICK ARMAFLEX INSULATION. PVC PIPING SHALL NOT BE ALLOWED. SEE PLUMBING SHEETS FOR SIZE AND LOCATION OF PIPING. FINAL CONNECTION AND P-TRAP BY MECHANICAL CONTRACTOR - ALL OTHER CONDENSATE PIPING BY PLUMBING CONTRACTOR.
33. PROVIDE INSULATED PRIMARY CONDENSATE DRAIN FROM ALL AIR HANDLERS. PROVIDE SECONDARY PAN DRAIN FROM ALL AIR HANDLERS DISCHARGING OVER NEAREST WINDOW OR DOOR. A FLOAT SWITCH MAY BE USED IN LIEU OF THE SECONDARY DRAIN. SEE PLANS FOR DESIGN.
34. PROVIDE HARD-WIRED CONDENSATE PUMP FOR AIR HANDLING UNITS WHERE FIELD CONDITIONS DO NOT ALLOW FOR LINES TO GRAVITY DRAIN. CONDENSATE PUMP SHALL BE EQUAL TO LITTLE GIANT VCMA-20ULS-C CONDENSATE PUMP (115V, 1.5A) WITH ANTI-SWEAT SLEEVE AND OVERFLOW SAFETY SWITCH OPTIONS. EXCEPT IN RETURN AIR PLENUMS. CONDENSATE PUMPS IN RETURN AIR PLENUMS SHALL BE EQUAL TO HARTELL A2-X-1005 PLENUM-RATED CONDENSATE PUMP (115/230V, 3.5/1.7A). CONTRACTOR SHALL CONFIRM SIZE OF PUMP WITH MANUFACTURES RECOMMENDATIONS. PLUG-IN PUMPS ARE NOT ACCEPTED.
35. FOR ELECTRICAL OR CONTROL PANELS PROVIDE A MINIMUM OF 30" CLEARANCE IN FRONT OF ALL 120-240 VOLT PANELS AND 40" CLEARANCE IN FRONT OF ANY 480 VOLT PANEL. PROVIDE ADEQUATE SIDE CLEARANCE PER NEC. DUCTS, PIPES, AND OTHER EQUIPMENT ARE NOT ALLOWED TO RUN OVER PANELS PER NEC.
36. THE GENERAL CONTRACTOR SHALL TEST AND BALANCE THE AIR SIDE SYSTEM UPON COMPLETION. THE FINAL TEST AND BALANCE MUST BE PERFORMED BY AN INDEPENDENT FIRM CONTRACTED BY THE GENERAL CONTRACTOR AND NOT THE MECHANICAL CONTRACTOR. THE TEST AND BALANCE FIRM SHALL HOLD A CURRENT CERTIFICATION FROM A RECOGNIZED TEST AND BALANCE ORGANIZATION. THE TEST AND BALANCE OPERATION SHALL INCLUDE ALL AIR SIDE SYSTEMS REGARDLESS OF SIZE OF EQUIPMENT AND A TEST TO CONFIRM BUILDING IS NEUTRAL OR POSITIVELY PRESSURIZED. THE T & B FIRM SHALL PROVIDE A WRITTEN REPORT TO THE ARCHITECT AND THE ENGINEER UPON COMPLETION. FBC 2010.
37. THE MECHANICAL CONTRACTOR SHALL VERIFY THAT THE AIR CONDITIONED SPACE IS SEALED WITH AN APPROVED AIR BARRIER IN ACCORDANCE WITH CHAPTER 13 OF THE FLORIDA BUILDING CODE-MECHANICAL. (REF SECTIONS 202 AND 406.1 ABCD.1.4 BUILDING CAVITIES). THE CONTRACTOR SHALL NOTIFY THE ENGINEER AND ARCHITECT IN WRITING OF ANY DISCREPANCIES PRIOR TO INSTALLATION OF ANY EQUIPMENT.
38. ALL OPERATIONS / MAINTENANCE MANUALS FOR EQUIPMENT SPECIFIED SHALL BE PROVIDED TO OWNER UPON COMPLETION OF PROJECT
39. ALL WIND LOAD CALCULATIONS AND OTHER COMPLIANCE CALCULATIONS AND/OR INSTALLATION DETAILS FOR ROOF MOUNTED EQUIPMENT SHALL BE PROVIDED BY STRUCTURAL ENGINEER/ARCHITECT AS REQUIRED BY FBC 2010. SEC. 1509, 1522 AND CHAPTER 16.
40. UNLESS OTHERWISE SPECIFIED, THE ELECTRICAL CONTRACTOR SHALL PROVIDE BAS MOTOR STARTERS WITH H.O.A. (HAND/OFF/AUTOMATIC) SWITCH AS REQUIRED FOR ALL MECHANICAL HVAC EQUIPMENT THAT REQUIRES MOTOR STARTERS. THE STARTERS SHALL BE MATCHED TO THE EQUIPMENT AND THE SERVICE VOLTAGE. PHASE LOSS MONITORS/PROTECTION SHALL BE REQUIRED ON ALL THREE PHASE EQUIPMENT PROVIDED AND INSTALLED BY THE ELECTRICAL CONTRACTOR.
41. ALL VFD'S SHALL BE PROVIDED BY MECHANICAL CONTRACTOR WITH CROSS LINE BYPASS FEATURE WHERE THE SERVICE IS 3 PHASE. MECHANICAL CONTRACTOR TO COORDINATE ON SITE AND WITH ELECTRICAL CONTRACTOR. ABB OR YASKAWA ARE ACCEPTABLE MANUFACTURES. PROVIDE NEMA 3R ENCLOSURE FOR OUTDOOR INSTALLATIONS AND NEMA 1 FOR INDOOR INSTALLATIONS.

MECHANICAL NOTES & LEGENDS

MECHANICAL ABBREVIATIONS

ACCH	AIR-COOLED CHILLER	HV	HEATING & VENTILATION UNIT
AFF	ABOVE FINISHED FLOOR	HOA	HAND OFF AUTOMATIC
AFG	ABOVE FINISHED GRADE	MAU	MAKE UP AIR UNIT
AHU	AIR HANDLING UNIT	NEW	NEW
BDD	BACK DRAFT DAMPER	NTS	NOT TO SCALE
CC	COOLING COIL	OA	OUTSIDE AIR
CHP	CHILLED WATER PUMP	PUX	PUMP/HEAT EXCHANGER
CH	CHILLER	RA	RETURN AIR
CT	COOLING TOWER	RD	RELIEF DAMPER
CWP	CONDENSER WATER PUMP	RE	RELOCATE EXISTING
DHC	DUCT RE-HEAT COIL	REF	REFERENCE
EDH	ELECTRIC DUCT HEATER	REF	REFRIGERANT
E	EXISTING	RHC	REHEAT COIL
EA	EXHAUST AIR	SA	SUPPLY AIR
EF	EXHAUST FAN	SF	SUPPLY FAN
ERV	ENERGY RECOVERY OA PRECONDITIONER UNIT	VAV	VARIABLE AIR VOLUME TERMINAL
EX	EXISTING	VIF	VERIFY IN FIELD
EXH	EXHAUST	VFD	VARIABLE FREQUENCY DRIVE
FCU	FAN COIL UNIT	WCCH	WATER-COOLED CHILLER
HC	HEATING COIL		

MECHANICAL SHEET INDEX

M0.1	MECHANICAL NOTES & LEGEND
M1.1	MECHANICAL ZONE MAP
M2.1	PARTIAL FIRST FLOOR MECHANICAL PLAN - SOUTH-WEST
M2.2	PARTIAL FIRST FLOOR MECHANICAL PLAN - SOUTH-EAST
M2.3	PARTIAL FIRST FLOOR MECHANICAL PLAN - NORTH-EAST
M2.4	PARTIAL SECOND FLOOR MECHANICAL PLAN - SOUTH-WEST
M2.5	PARTIAL SECOND FLOOR MECHANICAL PLAN - SOUTH-EAST
M2.6	PARTIAL SECOND FLOOR MECHANICAL PLAN - NORTH-EAST
M2.7	MECHANICAL ROOF PLAN
M3.1	MECHANICAL ISOMETRICS
M4.1	MECHANICAL SCHEDULES
M4.2	MECHANICAL SCHEDULES
M5.1	MECHANICAL DETAILS
M5.2	MECHANICAL DETAILS
M6.1	MECHANICAL CONTROLS

HVAC DESIGN CONDITIONS

	DB °F	WB °F	GR/#	COMMENTS
OUTDOOR	93	80	134	
INDOOR	73	62	65	
OUTSIDE AIR	SEE OA CALCULATION SCHEDULE			
GLASS TYPE	U=0.49, SHGC=0.5			
GLASS HEIGHT	6'-0"			
ROOF TYPE	METAL BAR JOIST WITH INSUL.			
TOTAL ROOF "R" VALUE	R-20			
CEILING HEIGHT	9'-0"			
CEILING CAVITY	2'-4"			
WALL TYPE	CMU WITH INSUL.			
TOTAL WALL "R" VALUE	R-6			
AIR CONDITIONED SQ FT	24 290 FROM COOLING LOADS			
FLOOR LEVEL(S)	2			

NOTES:
1. THIS SPACE SHALL NOT OPERATE BELOW 73°F.
2. ALL CONSTRUCTION METHODS AND R-VALUES PROVIDED BY ARCHITECT. SEE ARCHITECT PLANS FOR DETAILS.

MATERIALS AND WORKMANSHIP SHALL COMPLY WITH ALL APPLICABLE CODES AND ORDINANCES IN THEIR LATEST REVISIONS.

CONTRACTOR TO COORDINATE SPECIFIC REQUIREMENTS OF EQUIPMENT WITH MANUFACTURERS' SHOP DRAWINGS.

ALL EQUIPMENT SHALL BE INSTALLED STRICTLY IN ACCORDANCE WITH THE MANUFACTURERS WRITTEN INSTALLATION INSTRUCTIONS.

CEILING CAVITY IS A RETURN AIR PLENUM. NO PVC OR COMBUSTIBLE MATERIALS ALLOWED PER FBC 2010 MECHANICAL, SEC. 602.2.1

APPLICABLE BUILDING CODES

- FLORIDA BUILDING CODE, 2010 EDITION
- FLORIDA BUILDING CODE MECHANICAL, 2010 EDITION
- FLORIDA FIRE PREVENTION CODE, 2010 EDITION
- NFPA 90A, 2009 EDITION
- NFPA 91 2004 EDITION
- NFPA 96, 2008 EDITION
- NFPA 99, 2005 EDITION
- ANSI/ASHRAE 15 MECHANICAL REFRIGERATION
- ASHRAE 62.1 2004 EDITION

MECHANICAL SYMBOL LEGEND

- NEW RIGID DUCT METAL OR FIBER (REF KEY NOTES)
- SUPPLY DUCT VERTICAL TAPS
- NEW RETURN DUCT
- NEW FLEXIBLE DUCT
- REF — REFRIGERANT LINE - COPPER
- FD — FIRE DAMPER
- SD — SMOKE DAMPER
- C — CONDENSATE LINE
- SUPPLY DIFFUSER, SEE GRILL REGISTER AND DIFFUSER SCHEDULE FOR DESCRIPTION.
- T-BAR DROP IN SUPPLY DIFFUSER, SEE GRILL REGISTER AND DIFFUSER SCHEDULE FOR DESCRIPTION.
- RETURN GRILLE, SEE GRILLE REGISTER AND DIFFUSER SCHEDULE FOR DESCRIPTION.
- THERMOSTAT
- EXHAUST FAN
- ACCESS / AHU# — AIR HANDLER UNIT
- SMOKE DETECTOR/ CUTOFF
- SD-X / 500 — DIFFUSER/GRILLE SYMBOL
- AHU-X-X — EQUIPMENT TAG; EQUIPMENT NUMBER; EQUIPMENT FLOOR/LOCATION
- ACCESS PANEL
- SUPPLY AIR
- RETURN AIR

RGD CONSULTING ENGINEERS
MECHANICAL | ELECTRICAL | PLUMBING | FIRE PROTECTION | STRUCTURAL
www.rgdengineers.com
MICHAEL J. BISHOP
FLORIDA P.E. NO. 73000
MECHANICAL ENGINEER
CERT OF AUTH 5454
DATE 9.19.2014

HARVARD•JOLLY
ARCHITECTURE
Ft. Lauderdale 954-486-7910
Ft. Myers 239-275-7774
Jacksonville 904-396-3300
Orlando 407-667-7727
Punta Gorda 941-575-0403
St. Petersburg 727-896-4611
Tampa 813-286-8206
West Palm Beach 561-478-4457
AAC000119
www.HarvardJolly.com
WEST PALM BEACH, FL

NEW CLASSROOM BUILDING
RIVIERA BEACH MARITIME ACADEMY
RIVIERA BEACH, FLORIDA
CONTRUCTION DOCUEMENTS

Comm. No:	214031.00
Date:	09-24-14
Drawn:	RGD
Revised:	

copyright 2014

MECHANICAL NOTES & LEGENDS

M0.1

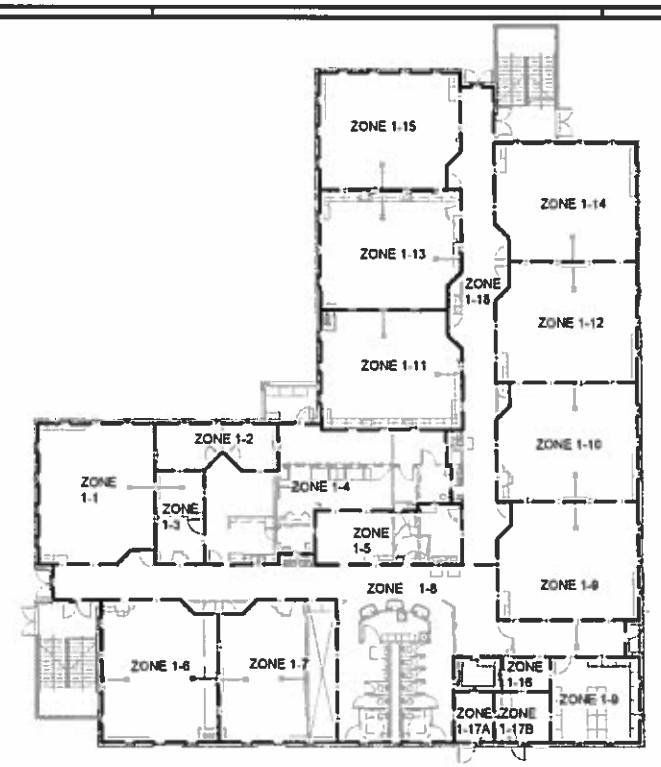

1 MECHANICAL ZONE MAP-FIRST FLOOR

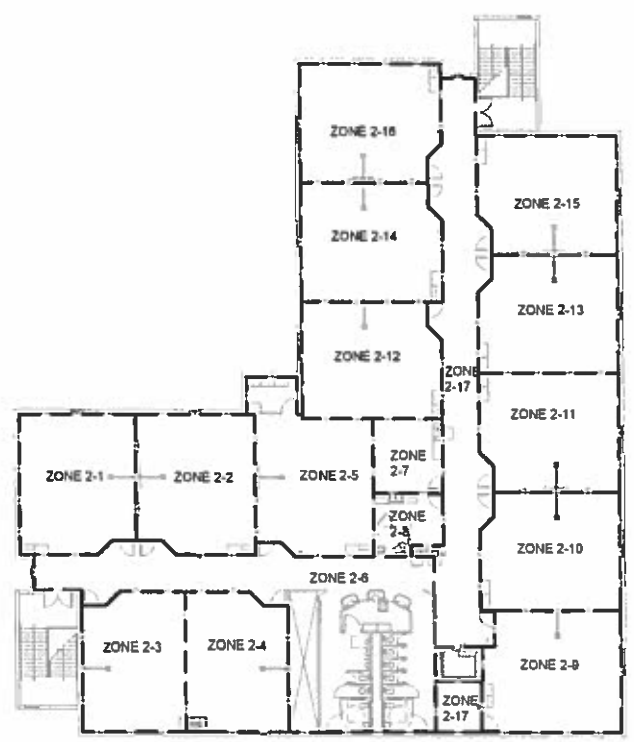

2 MECHANICAL ZONE MAP-SECOND FLOOR

RGD
CONSULTING ENGINEERS
MECHANICAL | ELECTRICAL | PLUMBING | FIRE PROTECTION | STRUCTURAL
www.rgdengineers.com
MADE IN THE USA
1212 INDIANTOWN RD. SUITE 106, JUPITER, FL 33418 (561) 741-0161
These Drawings are NOT VALID for any purpose which requires the original signature and seal of the engineer unless the original signature and seal are affixed. Drawings not signed and sealed by the engineer shall not be submitted to any authority or used for any purpose where signed and sealed documents are required.

MICHAEL J. BISHOP
FLORIDA P.E. NO. 73000
MECHANICAL ENGINEER
CERT. OF AUTH. 5454
DATE 9.19.2014

HARVARD•JOLLY
ARCHITECTURE

Ft. Lauderdale 954-486-7910
Ft. Myers 239-275-7774
Jacksonville 904-398-3300
Orlando 407-877-7727
Punta Gorda 941-575-0403
St. Petersburg 727-898-4611
Tampa 813-286-8206
West Palm Beach 561-478-4457
AAC000119
www.HarvardJolly.com
WEST PALM BEACH, FL

NEW CLASSROOM BUILDING
RIVIERA BEACH MARITIME ACADEMY
RIVIERA BEACH, FLORIDA
CONTRUCTION DOCUEMENTS

Comm. No:	214031.00
Date:	09-24-14
Drawn:	RGD
Revised:	

copyright 2014

MECHANICAL ZONE MAP

M1.1

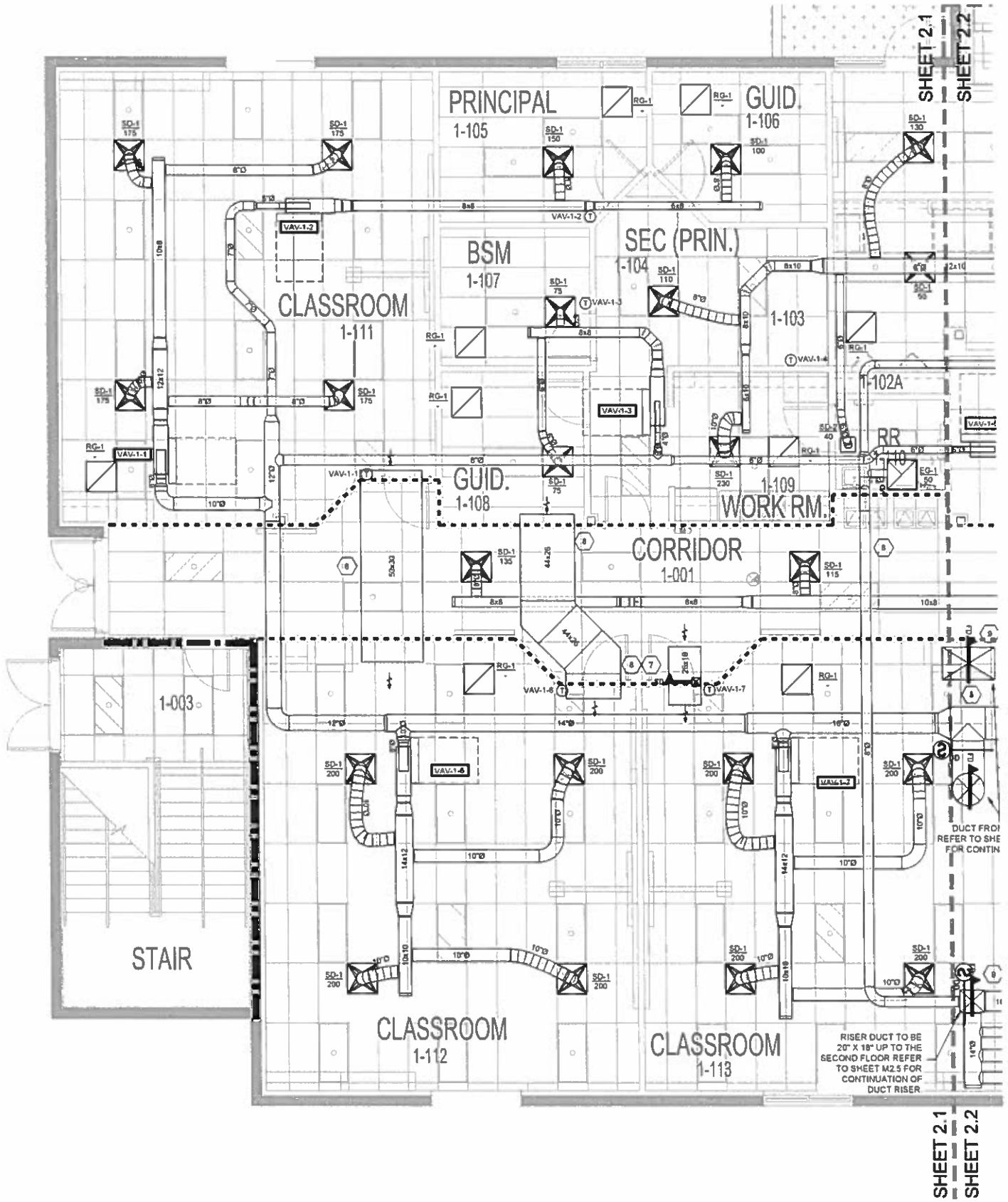

1 PARTIAL FIRST FLOOR MECHANICAL PLAN- SOUTH-WEST

SCALE 1/4" = 1'-0"

MECHANICAL KEY NOTES

1. ROUTE EXHAUST DUCT UP INTO THE BAR JOIST.
2. INSTALL EXHAUST DUCTS AS HIGH AS POSSIBLE.
3. TAP INTO EXHAUST DUCT FROM THE BOTTOM.
4. COORDINATE EXHAUST DUCT TO BE RUN IN BETWEEN JOIST. PROVIDE OFFSET PRIOR TO MEDIUM PRESSURE DUCT LIMITED CEILING CAVITY IN THIS AREA.
5. PROVIDE A 36"X30" RETURN DUCT UP TO RTU. REFERENCE SHEET M2.7 FOR CONTINUATION OF DUCT WORK.
6. PROVIDE DRYWELL FOR CONDENSATE LINES.
7. PROVIDE SMOKE DAMPER REFERENCE DETAIL 2 ON SHEET M5.2. PROVIDE DUCT MOUNTED ACCESS DOOR.
8. DUCT PASSES THROUGH A SMOKE-RATED BARRIER. THE DUCT SHALL TRANSITION FROM DUCTBOARD TO 26 GA GALVANIZE METAL CONSTRUCTION WHERE LOCATED IN SMOKE-RATED SPACES. DUCT PENETRATION THROUGH SMOKE-RATED BARRIER SHALL BE PROPERLY SEALED WITH AN APPROVED SEALANT.
9. PROVIDE FIRE DAMPERS FOR PENETRATION ONTO FIRST FLOOR CEILING AS SHOWN IN FLOOR PLAN. DAMPERS ARE TO BE ACCESSED FROM UNDERNEATH.
10. ALL REFRIGERANT PIPE SIZING BY EQUIP. MANUFACTURE.
11. MECHANICAL CONTRACTOR SHALL COORDINATE ALL DUCT REQUIRED OPENINGS THROUGH STRUCTURAL STEEL THAT SUPPORT REMOVABLE PARTITIONS WITH THE GENERAL CONTRACTOR.

RGD
CONSULTING ENGINEERS
MECHANICAL | ELECTRICAL | PLUMBING | FIRE PROTECTION | STRUCTURAL
www.rgdengineers.com
MADE IN THE USA
1212 PROSPECTOWN RD. SUITE 104, JUPITER, FL 33458 (561) 745-0016
These Drawings are NOT VALID for any purpose which requires the original signature and seal of the engineer unless the original signature and seal are affixed. Drawings not signed and sealed by the engineer shall not be submitted to any authority as used for any purpose where signed and sealed documents are required.

MICHAEL J. BISHOP
FLORIDA P.E. NO. 73009
MECHANICAL ENGINEER
CERT. OF AUTH. 5454
DATE 9.19.2014

HARVARD•JOLLY
ARCHITECTURE

Ft. Lauderdale 954-486-7910
Ft. Myers 239-275-7774
Jacksonville 904-396-3300
Orlando 407-867-7727
Punta Gorda 941-575-0403
St. Petersburg 727-896-4611
Tampa 813-286-8205
West Palm Beach 561-478-4457
AAC000119
www.Harvardjolly.com
WEST PALM BEACH, FL.

NEW CLASSROOM BUILDING
RIVIERA BEACH MARITIME ACADEMY
RIVIERA BEACH, FLORIDA
CONTRUCTION DOCUEMENTS

Comm. No:	214031.00
Date:	09-24-14
Drawn:	RGD
Revised:	

copyright 2014

PARTIAL FIRST FLOOR MECHANICAL PLAN- SOUTH-WEST

M2.1

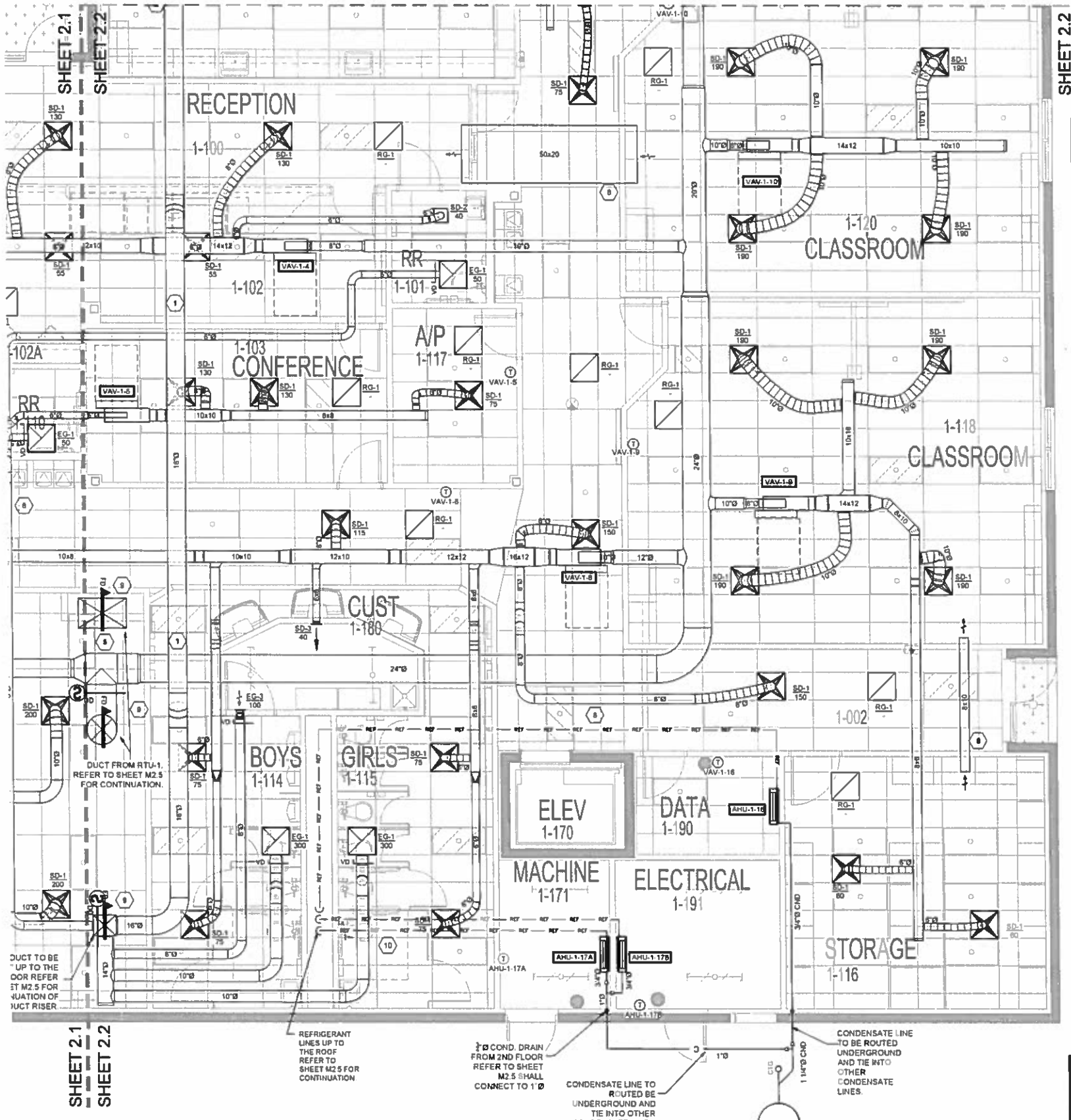

1 PARTIAL FIRST FLOOR MECHANICAL PLAN- SOUTH-EAST

SCALE: 1/4" = 1'-0"

MECHANICAL KEY NOTES

1. ROUTE EXHAUST DUCT UP INTO THE BAR JOIST.
2. INSTALL EXHAUST DUCTS AS HIGH AS POSSIBLE.
3. TAP INTO EXHAUST DUCT FROM THE BOTTOM.
4. COORDINATE EXHAUST DUCT TO BE RUN IN BETWEEN JOIST. PROVIDE OFFSET PRIOR TO MEDIUM PRESSURE DUCT. LIMITED CEILING CAVITY IN THIS AREA.
5. PROVIDE A 36"X30" RETURN DUCT UP TO RTU. REFERENCE SHEET M2.7 FOR CONTINUATION OF DUCT WORK.
6. PROVIDE DRYWELL FOR CONDENSATE LINES.
7. PROVIDE SMOKE DAMPER REFERENCE DETAIL 2 ON SHEET M5.2. PROVIDE DUCT MOUNTED ACCESS DOOR.
8. DUCT PASSES THROUGH A SMOKE-RATED BARRIER. THE DUCT SHALL TRANSITION FROM DUCTBOARD TO 25 GA GALVANIZE METAL CONSTRUCTION WHERE LOCATED IN SMOKE-RATED SPACES. DUCT PENETRATION THROUGH SMOKE-RATED BARRIER SHALL BE PROPERLY SEALED WITH AN APPROVED SEALANT.
9. PROVIDE FIRE DAMPERS FOR PENETRATION ONTO FIRST FLOOR CEILING AS SHOWN IN FLOOR PLAN. DAMPERS ARE TO BE ACCESSED FROM UNDERNEATH.
10. ALL REFRIGERANT PIPE SIZING BY EQUIP. MANUFACTURE.
11. MECHANICAL CONTRACTOR SHALL COORDINATE ALL DUCT REQUIRED OPENINGS THROUGH STRUCTURAL STEEL THAT SUPPORT REMOVABLE PARTITIONS WITH THE GENERAL CONTRACTOR.

RGD
CONSULTING ENGINEERS
MECHANICAL | ELECTRICAL | PLUMBING | FIRE PROTECTION | STRUCTURAL
www.rgdengineers.com
MADE IN THE USA
1232 INDIANTOWN RD. SUITE 104, JUPITER, FL 33458 (561) 743-8161

These Drawings are NOT VALID for any purpose which requires the original signature and seal of the engineer unless the original signature and seal are affixed. Drawings not signed and sealed by the engineer shall not be submitted to any authority or used for any purpose where signed and sealed documents are required.

MICHAEL J. BISHOP
FLORIDA P.E. NO. 73000
MECHANICAL ENGINEER
CERT. OF AUTH. 6404
DATE 9.19.2014

HARVARD•JOLLY
ARCHITECTURE
Ft. Lauderdale 954-486-7910
Ft. Myers 239-275-7774
Jacksonville 904-396-3300
Orlando 407-687-7727
Punta Gorda 941-575-0403
St. Petersburg 727-898-4611
Tampa 813-286-8206
West Palm Beach 561-478-4457
AAC000119
www.HarvardJolly.com
WEST PALM BEACH, FL.

NEW CLASSROOM BUILDING
RIVIERA BEACH MARITIME ACADEMY
RIVIERA BEACH, FLORIDA
CONTRUCTION DOCUEMENTS

Comm. No:	214031.00
Date:	09-24-14
Drawn:	RGD
Revised:	

copyright 2014

PARTIAL FIRST FLOOR MECHANICAL PLAN- SOUTH-EAST

M2.2

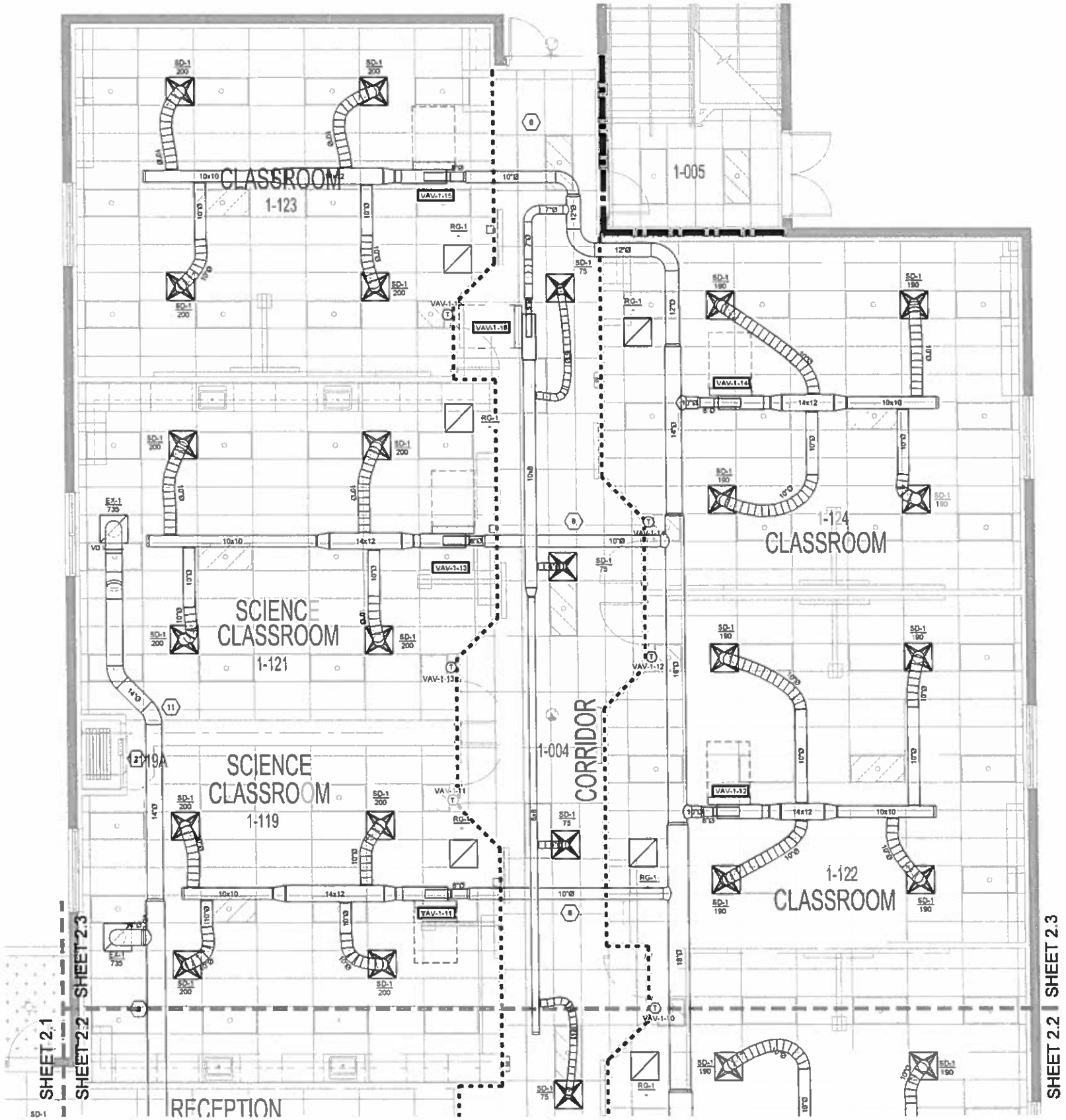

1 PARTIAL FIRST FLOOR MECHANICAL PLAN- NORTH-EAST

SCALE 1/4" = 1'-0"

MECHANICAL KEY NOTES

1. ROUTE EXHAUST DUCT UP INTO THE BAR JOIST
2. INSTALL EXHAUST DUCTS AS HIGH AS POSSIBLE
3. TAP INTO EXHAUST DUCT FROM THE BOTTOM.
4. COORDINATE EXHAUST DUCT TO BE RUN IN BETWEEN JOIST PROVIDE OFFSET PRIOR TO MEDIUM PRESSURE DUCT LIMITED CEILING CAVITY IN THIS AREA.
5. PROVIDE A 36"X30" RETURN DUCT UP TO RTU. REFERENCE SHEET M2.7 FOR CONTINUATION OF DUCT WORK.
6. PROVIDE DRYWELL FOR CONDENSATE LINES.
7. PROVIDE SMOKE DAMPER REFERENCE DETAIL 2 ON SHEET M5.2. PROVIDE DUCT MOUNTED ACCESS DOOR.
8. DUCT PASSES THROUGH A SMOKE-RATED BARRIER. THE DUCT SHALL TRANSITION FROM DUCTBOARD TO 26 GA GALVANIZE METAL CONSTRUCTION WHERE LOCATED IN SMOKE-RATED SPACES. DUCT PENETRATION THROUGH SMOKE-RATED BARRIER SHALL BE PROPERLY SEALED WITH AN APPROVED SEALANT.
9. PROVIDE FIRE DAMPERS FOR PENETRATION ONTO FIRST FLOOR CEILING AS SHOWN IN FLOOR PLAN. DAMPERS ARE TO BE ACCESSED FROM UNDERNEATH.
10. ALL REFRIGERANT PIPE SIZING BY EQUIP MANUFACTURE.
11. MECHANICAL CONTRACTOR SHALL COORDINATE ALL DUCT REQUIRED OPENINGS THROUGH STRUCTURAL STEEL THAT SUPPORT REMOVABLE PARTITIONS WITH THE GENERAL CONTRACTOR.

RGD
CONSULTING ENGINEERS
MECHANICAL | ELECTRICAL | PLUMBING | FIRE PROTECTION | SOLAR
www.rgdengineers.com
MICHAEL J. BISHOP
FL GREG.P.E. NO. 73009
MECHANICAL ENGINEER
CERT. OF AUTH. 5454
DATE 9.19.2014

HARVARD•JOLLY
ARCHITECTURE
Ft. Lauderdale 954-486-7910
Ft. Myers 239-275-7774
Jacksonville 904-296-3300
Orlando 407-277-7777
Punta Gorda 941-575-0403
St. Petersburg 727-896-4611
Tampa 813-286-6208
West Palm Beach 561-478-4467
AA0003119
www.HarvardJolly.com
WEST PALM BEACH, FL

NEW CLASSROOM BUILDING
RIVIERA BEACH MARITIME ACADEMY
RIVIERA BEACH, FLORIDA
CONTRUCTION DOCUEMENTS

Contract No:	21403.00
Date:	09-24-14
Drawn:	RGD
Revised:	

copyright 2014

PARTIAL FIRST FLOOR MECHANICAL PLAN- NORTH-EAST

M2.3

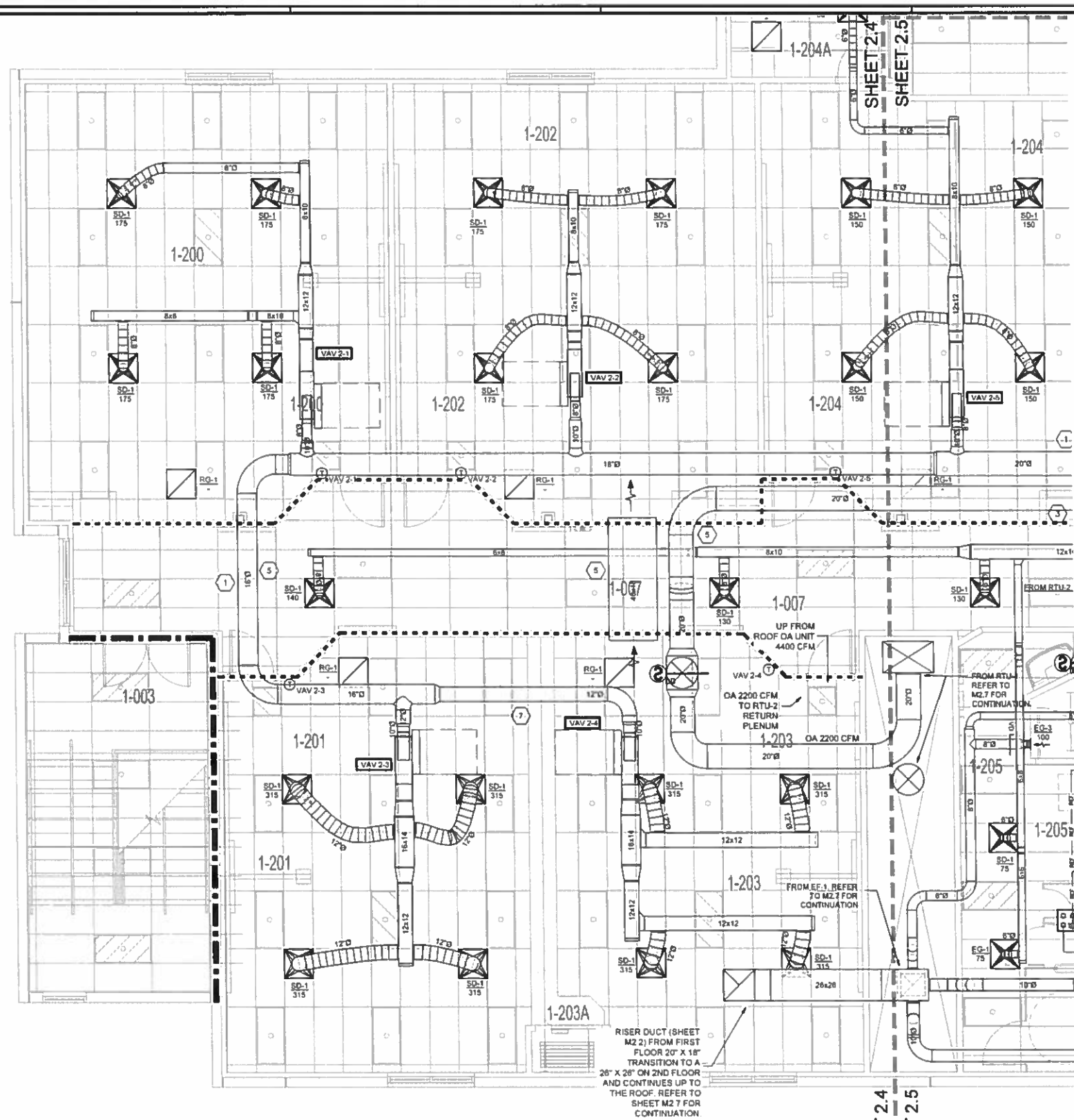

1 PARTIAL SECOND FLOOR MECHANICAL PLAN- SOUTH-WEST

SCALE: 1/4" = 1'-0"

MECHANICAL KEY NOTES

1. RUN MEDIUM PRESSURE DUCT AS HIGH AS POSSIBLE .
2. COORDINATE LOW PRESSURE DUCT TO RUN BELOW MEDIUM PRESSURE DUCT. PROVIDE OFFSET PRIOR TO MEDIUM PRESSURE DUCT. LIMITED CEILING CAVITY IN THIS AREA.
3. PROVIDE A 36"X34" DUCT RISE UP TO RTU2. REFER SHEET M2.7 FOR CONTINUATION.
4. PROVIDE SMOKE DAMPER REFERENCE DETAIL 2 ON SHEET M5.2. PROVIDE DUCT MOUNTED ACCESS DOOR.
5. DUCT PASSES THROUGH A SMOKE-RATED BARRIER, THE DUCT SHALL TRANSITION FROM DUCTBOARD TO 26 GA GALVANIZE METAL CONSTRUCTION WHERE LOCATED IN SMOKE-RATED SPACES. DUCT PENETRATION THROUGH SMOKE-RATED BARRIER SHALL BE PROPERLY SEALED WITH AN APPROVED SEALANT.
6. ALL REFRIGERANT PIPE SIZING BY EQUIP. MANUFACTURE.
7. MECHANICAL CONTRACTOR SHALL COORDINATE ALL DUCT REQUIRED OPENINGS THROUGH STRUCTURAL STEEL THAT SUPPORT REMOVABLE PARTITIONS WITH THE GENERAL CONTRACTOR.

RGD
CONSULTING ENGINEERS
MECHANICAL | ELECTRICAL | PLUMBING | FIRE PROTECTION | STRUCTURAL
www.rgdengineers.com
MADE IN THE USA
1212 NORTHCREWN BLD. SUITE 104, JUPITER, FL 33458 (561) 745-0162
These Drawings are NOT VALID for any purpose which requires the original signature and seal of the engineer unless the original signature and seal are affixed. Drawings not signed and sealed by the engineer shall not be submitted to any authority or used for any purpose where signed and sealed documents are required.
MICHAEL J. BISHOP
FLORIDA P.E. NO. 73009
MECHANICAL ENGINEER
CERT OF AUTH. 9464
DATE 9.19.2014

HARVARD•JOLLY
ARCHITECTURE
Ft. Lauderdale 954-486-7910
Ft. Myers 239-275-7774
Jacksonville 904-396-3300
Orlando 407-422-7777
Punta Gorda 941-575-0403
St. Petersburg 727-896-4511
Tampa 813-286-8309
West Palm Beach 561-478-4457
Winter Park 407-628-1111
www.Harvardjolly.com
WEST PALM BEACH, FL

NEW CLASSROOM BUILDING
RIVIERA BEACH MARITIME ACADEMY
RIVIERA BEACH, FLORIDA
CONTRUCTION DOCUEMENTS

Comm. No:	214031.00
Date:	09-24-14
Drawn:	RGD
Revised:	

copyright 2014

PARTIAL SECOND FLOOR MECHANICAL PLAN- SOUTH-WEST

M2.4

MECHANICAL KEY NOTES

1. RUN MEDIUM PRESSURE DUCT AS HIGH AS POSSIBLE.
2. COORDINATE LOW PRESSURE DUCT TO RUN BELOW MEDIUM PRESSURE DUCT. PROVIDE OFFSET PRIOR TO MEDIUM PRESSURE DUCT. LIMITED CEILING CAVITY IN THIS AREA.
3. PROVIDE A 36"X24" DUCT RISE UP TO RTU. REFER SHEET M2.7 FOR CONTINUATION.
4. PROVIDE SMOKE DAMPER REFERENCE DETAIL 2 ON SHEET M5.2. PROVIDE DUCT MOUNTED ACCESS DOOR.
5. DUCT PASSES THROUGH A SMOKE-RATED BARRIER. THE DUCT SHALL TRANSITION FROM DUCTBOARD TO 26 GA GALVANIZE METAL CONSTRUCTION WHERE LOCATED IN SMOKE-RATED SPACES. DUCT PENETRATION THROUGH SMOKE-RATED BARRIER SHALL BE PROPERLY SEALED WITH AN APPROVED SEALANT.
6. ALL REFRIGERANT PIPE SIZING BY EQUIP. MANUFACTURE.
7. MECHANICAL CONTRACTOR SHALL COORDINATE ALL DUCT REQUIRED OPENINGS THROUGH STRUCTURAL STEEL THAT SUPPORT REMOVABLE PARTITIONS WITH THE GENERAL CONTRACTOR.

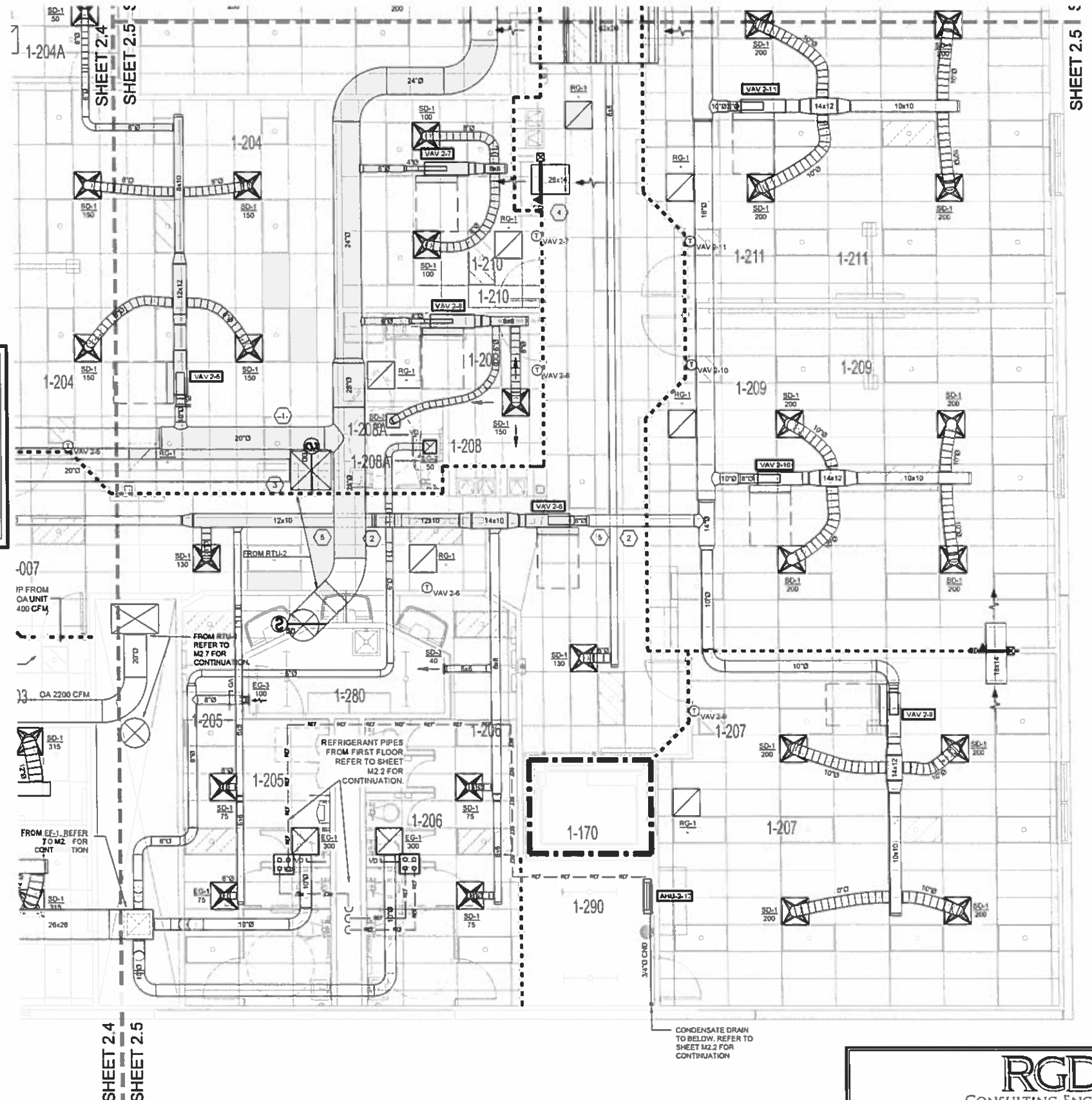

1 PARTIAL SECOND FLOOR MECHANICAL PLAN- SOUTH-EAST

SCALE: 1/4" = 1'-0"

RGD
CONSULTING ENGINEERS
MECHANICAL | ELECTRICAL | PLUMBING | FIRE PROTECTION | STRUCTURAL
www.rgdengineers.com
MADE IN THE USA
1217 BYRN MANTIWN RD SUITE 104 JUPITER, FL 33458 (561) 741-0116
These Drawings are NOT VALID for any purpose which requires the original signature and seal of the engineer unless the original signature and seal are affixed. Drawings not signed and sealed by the engineer shall not be submitted to any authority or used for any purpose where signed and sealed documents are required.

MICHAEL J. BISHOP
FLORIDA P.E. NO. 73099
MECHANICAL ENGINEER
CERT OF AUTH 3454
DATE 9.19.2014

HARVARD•JOLLY
ARCHITECTURE

Ft. Lauderdale 954-495-7910
Ft. Myers 239-275-7774
Jacksonville 904-389-3300
Orlando 407-677-7777
Punta Gorda 941-575-0403
St. Petersburg 727-895-4611
Tampa 813-286-5205
West Palm Beach 561-478-4457
AA0000119
www.harvardjolly.com
WEST PALM BEACH, FL.

NEW CLASSROOM BUILDING
RIVIERA BEACH MARITIME ACADEMY
RIVIERA BEACH, FLORIDA
CONTRUCTION DOCUEMENTS

Comm. No:	214031.00
Date:	09-24-14
Drawn:	RGD
Revised:	

copyright 2014

PARTIAL SECOND FLOOR MECHANICAL PLAN- SOUTH-EAST

M2.5

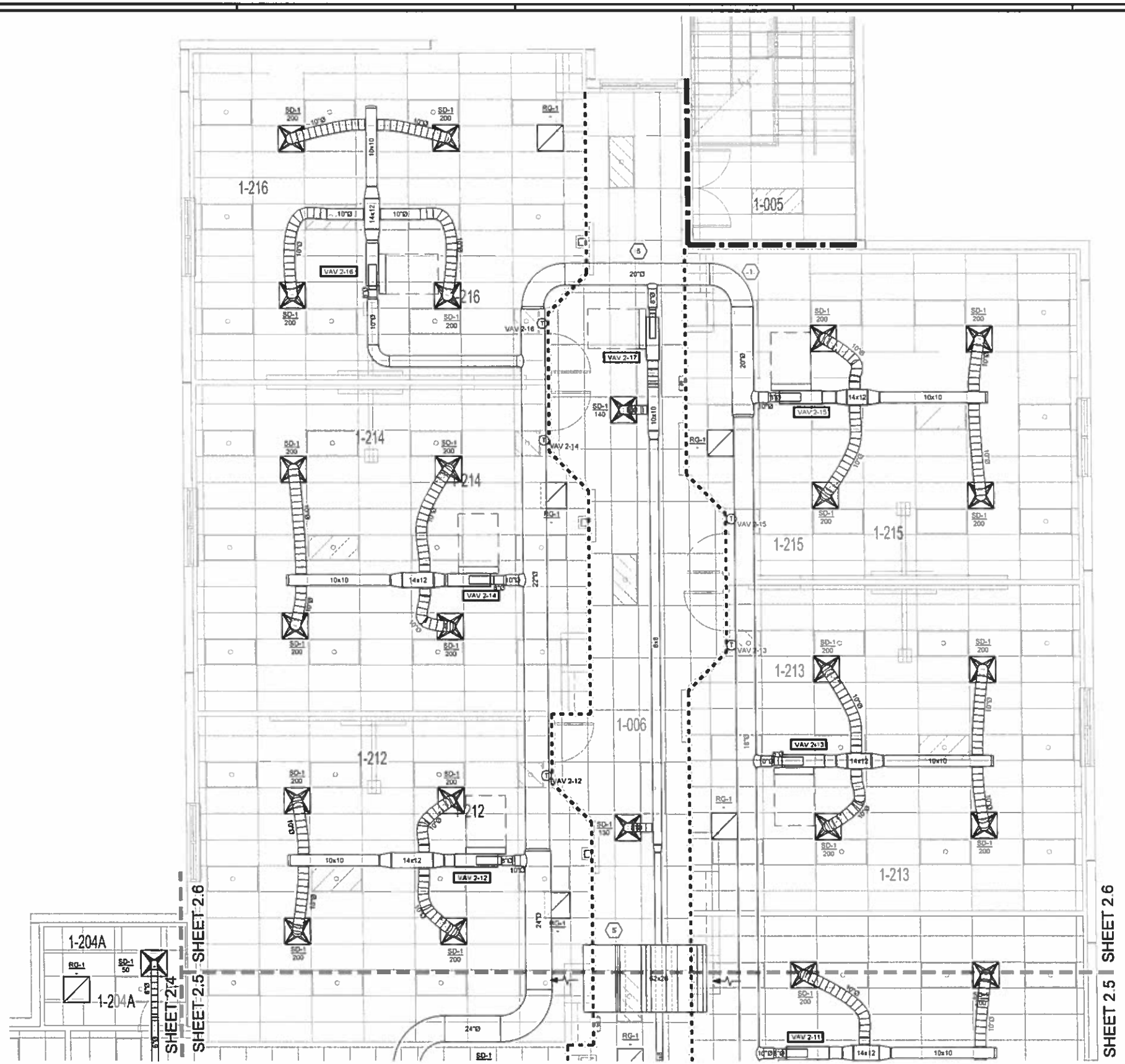

1 PARTIAL SECOND FLOOR MECHANICAL PLAN- NORTH-EAST

SCALE: 1/4" = 1'-0"

MECHANICAL KEY NOTES

1. RUN MEDIUM PRESSURE DUCT AS HIGH AS POSSIBLE
2. COORDINATE LOW PRESSURE DUCT TO RUN BELOW MEDIUM PRESSURE DUCT. PROVIDE OFFSET PRIOR TO MEDIUM PRESSURE DUCT. LIMITED CEILING CAVITY IN THIS AREA.
3. PROVIDE A 36"X34" DUCT RISE UP TO RTU. REFER SHEET M2.7 FOR CONTINUATION.
4. PROVIDE SMOKE DAMPER REFERENCE DETAIL 2 ON SHEET M5.2. PROVIDE DUCT MOUNTED ACCESS DOOR.
5. DUCT PASSES THROUGH A SMOKE-RATED BARRIER. THE DUCT SHALL TRANSITION FROM DUCTBOARD TO 26 GA GALVANIZE METAL CONSTRUCTION WHERE LOCATED IN SMOKE-RATED SPACES. DUCT PENETRATION THROUGH SMOKE-RATED BARRIER SHALL BE PROPERLY SEALED WITH AN APPROVED SEALANT.
6. ALL REFRIGERANT PIPE SIZING BY EQUIP. MANUFACTURE.
7. MECHANICAL CONTRACTOR SHALL COORDINATE ALL DUCT REQUIRED OPENINGS THROUGH STRUCTURAL STEEL THAT SUPPORT REMOVABLE PARTITIONS WITH THE GENERAL CONTRACTOR.

RGD
CONSULTING ENGINEERS
MECHANICAL | SOLUTIONS | PLANNING | FIRE PROTECTION | STRUCTURAL
www.rgdengineers.com
MADE IN THE USA
1210 PRESENTOWN RD. SUITE 104, JUPITER, FL 33158 (561) 743-0161
These Drawings are NOT VALID for any purpose which requires the original signature and seal of the engineer unless the original signature and seal are affixed. Drawings not signed and sealed by the engineer shall not be released to any authority or used for any purpose where signed and sealed documents are required.

MICHAEL J. BISHOP
FLORIDA P.E. NO. 73009
MECHANICAL ENGINEER
CERT OF AUTH. 5454
DATE 9.19.2014

HARVARD•JOLLY
ARCHITECTURE

Ft. Lauderdale 954-486-7910
Ft. Myers 239-275-7774
Jacksonville 904-396-3300
Orlando 407-657-7727
Punta Gorda 941-575-0403
St. Petersburg 727-896-4611
Tampa 813-286-8206
West Palm Beach 561-478-4457
AAC000119
www.HarvardJolly.com
WEST PALM BEACH, FL.

NEW CLASSROOM BUILDING
RIVIERA BEACH MARITIME ACADEMY
RIVIERA BEACH, FLORIDA
CONTRUCTION DOCUEMENTS

Comm. No:	214031.00
Date:	09-24-14
Drawn:	RGD
Revised:	

copyright 2014

PARTIAL SECOND FLOOR MECHANICAL PLAN- NORTH-EAST

M2.6

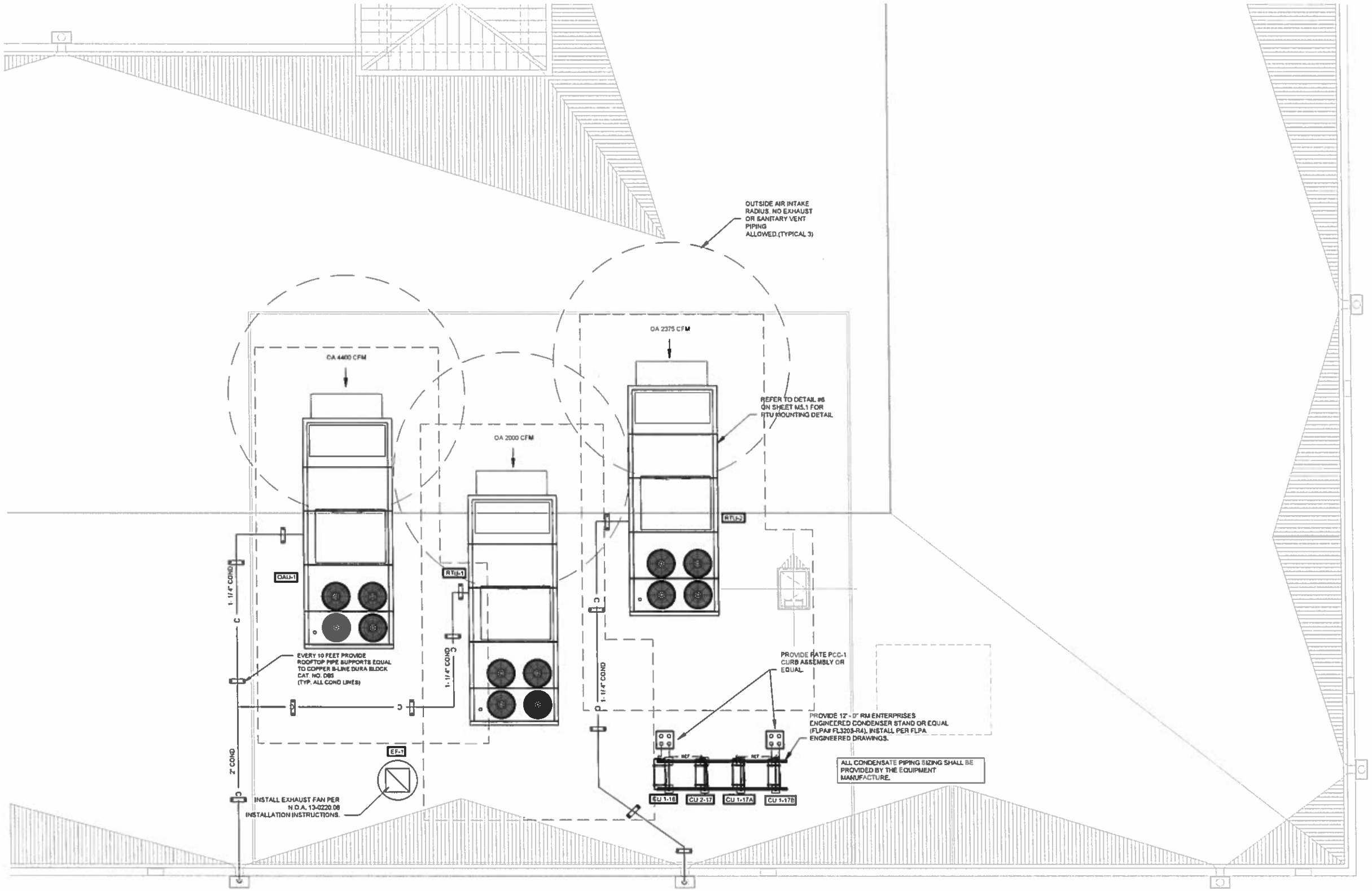

1 MECHANICAL ROOF PLAN

SCALE: 1/4" = 1'-0"

RGD
CONSULTING ENGINEERS
MECHANICAL | ELECTRICAL | PLUMBING | FIRE PROTECTION | SUSTAINABLE
www.rgdengineers.com
MADE IN THE USA
1212 INDIANTOWN RD. SUITE 104, JUPITER, FL 33478 (561) 745-8161
These Drawings are NOT VALID for any purpose which requires the original signature and seal of the engineer unless the original signature and seal are affixed. Drawings not signed and sealed by the engineer shall not be submitted to any authority or used for any purpose where signed and sealed documents are required.

MICHAEL J. BISHOP
FLORIDA P.E. NO. 73009
MECHANICAL ENGINEER
CERT OF AUTH 5454
DATE 9.19.2014

HARVARD•JOLLY
ARCHITECTURE

Ft. Lauderdale 954-486-7910
Ft. Myers 239-275-7774
Jacksonville 904-396-3300
Orlando 407-657-7727
Punta Gorda 941-575-0403
St. Petersburg 727-895-4611
Tampa 813-286-8206
West Palm Beach 561-478-4457
AAC000119
www.HarvardJolly.com
WEST PALM BEACH, FL

NEW CLASSROOM BUILDING
RIVIERA BEACH MARITIME ACADEMY
RIVIERA BEACH, FLORIDA
CONTRUCTION DOCUEMENTS

Comm. No:	214031.00
Date:	09-24-14
Drawn:	RGD
Revised:	

copyright 2014

MECHANICAL ROOF PLAN

M2.7

MECHANICAL ISOMETRICS

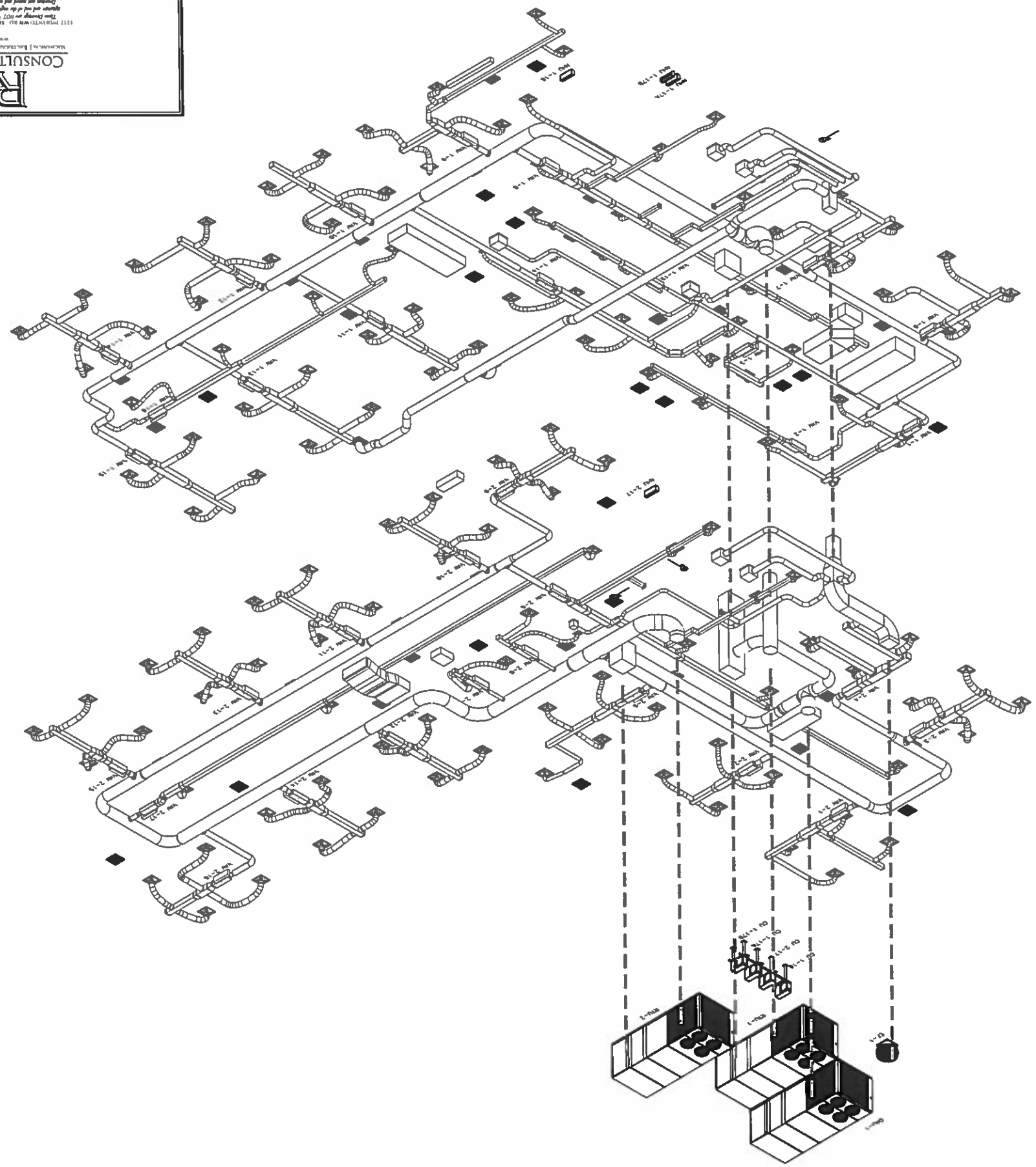

RGD
CONSULTING ENGINEERS

MECHANICAL ENGINEER
MICHAEL J. BISHOP
MECHANICAL ENGINEER
CERT. OF AUTH. 5454
DATE 8.19.2014

MECHANICAL ISOMETRICS

M3.1

copyright 2014

Approved
Drawn: RGD
Date: 09-24-14
Copyn. No: 214031.00

NEW CLASSROOM BUILDING
RIVIERA BEACH MARITIME ACADEMY
RIVIERA BEACH, FLORIDA
CONTRUCTION DOCUEMENTS

Ft. Lauderdale 954-486-7910
Ft. Myers 239-275-7774
Jacksonville 904-395-3300
Orlando 407-867-7727
Punta Gorda 941-575-0403
St. Petersburg 727-896-4611
Tampa 813-286-8208
West Palm Beach 561-478-4457
AAC000119
www.harvardjolly.com
WEST PALM BEACH, FL.

HARVARD•JOLLY
ARCHITECTURE

VAV TERMINAL BOX SCHEDULE

Mark		VAV-1-1	VAV-1-2	VAV-1-3	VAV-1-4	VAV-1-5	VAV-1-6	VAV-1-7	VAV-1-8	VAV-1-9	VAV-1-10	VAV-1-11	VAV-1-12	VAV-1-13	VAV-1-14	VAV-1-15	VAV-1-16
Manufacturer		TRANE	TRANE	TRANE	TRANE	TRANE	TRANE	TRANE	TRANE	TRANE	TRANE	TRANE	TRANE	TRANE	TRANE	TRANE	TRANE
Unit model		VCEF	VCEF	VCEF	VCEF	VCEF	VCEF	VCEF	VCEF	VCEF	VCEF	VCEF	VCEF	VCEF	VCEF	VCEF	VCEF
Primary inlet	inches	8	5	4	8	5	8	8	10	8	8	8	8	8	8	8	5
Design cooling airflow	cfm	700	250	150	790	335	800	800	1000	880	760	800	760	800	780	800	300
Min cooling airflow	cfm	105	50	30	105	50	105	105	105	165	105	105	105	165	105	105	50
Cooling inlet velocity	ft/min	2005	1833	1718	2262	2456	2291	2291	1833	2520	2176	2291	2176	2291	2176	2291	2199
Heating airflow	cfm	420	150	90	474	201	480	480	N/A	528	456	480	456	480	456	480	180
Electric heater voltage		277/1/60	277/1/60	277/1/60	277/1/60	277/1/60	277/1/60	277/1/60	24V	277/1/60	277/1/60	277/1/60	277/1/60	277/1/60	277/1/60	277/1/60	24V
Electric heater kilowatt		4.0	1.5	1.0	4.5	2.0	5.0	5.0	NONE	5.5	4.5	5.0	4.5	5.0	4.5	5.0	NONE
Electric heater stage		1	1	1	1	1	1	1		1	1	1	1	1	1	1	
Full load amps	A	14.44	5.42	3.61	16.25	7.22	18.05	18.05	24V	19.86	16.25	18.05	16.25	18.05	16.25	18.05	24V
Min circuit ampacity	A	18.05	6.77	4.51	20.31	9.03	22.56	22.56	24 V	24.82	20.31	22.56	20.31	22.56	20.31	22.56	24 V
Max fuse size	A	20	15	15	25	15	25	25	24 V	25	25	25	25	25	25	25	24 V

Mark		VAV-2-1	VAV-2-2	VAV-2-3	VAV-2-4	VAV-2-5	VAV-2-6	VAV-2-7	VAV-2-8	VAV-2-9	VAV-2-10	VAV-2-11	VAV-2-12	VAV-2-13	VAV-2-14	VAV-2-15	VAV-2-16	VAV-2-17
Manufacturer		TRANE	TRANE	TRANE	TRANE	TRANE	TRANE	TRANE	TRANE	TRANE	TRANE	TRANE	TRANE	TRANE	TRANE	TRANE	TRANE	TRANE
Unit model		VCEF	VCEF	VCEF	VCEF	VCEF	VCEF	VCEF	VCEF	VCEF	VCEF	VCEF	VCEF	VCEF	VCEF	VCEF	VCEF	VCEF
Primary inlet	inches	8	8	10	10	8	8	4	4	8	8	8	8	8	8	8	8	5
Design cooling airflow	cfm	700	700	1280	1280	650	740	200	190	800	800	800	800	800	800	800	800	400
Min cooling airflow	cfm	105	105	165	165	105	105	30	30	105	105	105	105	105	105	105	165	50
Cooling inlet velocity	ft/min	2005	2005	2309	2309	1881	2119	2291	2178	2291	2291	2291	2291	2291	2291	2291	2291	2932
Heating airflow	cfm	420	420	756	756	390	444	120	114	480	480	480	480	480	480	480	480	240
Electric heater voltage		277/1/60	277/1/60	277/1/60	277/1/60	277/1/60	24V	277/1/60	277/1/60	277/1/60	277/1/60	277/1/60	277/1/60	277/1/60	277/1/60	277/1/60	277/1/60	24V
Electric heater kilowatt		4.0	4.0	7.5	7.5	4.0	NONE	1.5	1.5	5.0	5.0	5.0	5.0	5.0	5.0	5.0	5.0	NONE
Electric heater stage		1	1	2	2	1		1	1	1	1	1	1	1	1	1	1	
Full load amps	A	14.44	14.44	27.08	27.08	14.44	24V	5.42	5.42	18.05	18.05	18.05	18.05	18.05	18.05	18.05	18.05	24V
Min circuit ampacity	A	18.05	18.05	33.84	33.84	18.05	24 V	6.77	6.77	22.56	22.56	22.56	22.56	22.56	22.56	22.56	22.56	24 V
Max fuse size	A	20	20	35	35	20	24 V	15	15	25	25	25	25	25	25	25	25	24 V

APPROVED ALTERNATES: TITUS & ENVIRO-TEC

SPECIAL NOTES:
1. ALL EQUIPMENT SHALL BE EQUAL TO TRANE EQUIPMENT LISTED IN ALL RESPECTS.
2. ELECTRICAL SPECIFICATIONS LISTED ARE CONSISTENT WITH TRANE EQUIPMENT. ALTERNATE EQUIPMENT MAY VARY. COORDINATE VARIANCES WITH THE ELECTRICAL CONTRACTOR.
3. PROVIDE DOOR INTERLOCKING DISCONNECT SWITCH.
4. PROVIDE 24V CONTROL TRANSFORMER.
5. PROVIDE ELECTRIC HEAT AS SCHEDULED WITH MAGNETIC CONTACTOR.

GRILLE, REGISTER, & DIFFUSER SCHEDULE

MARK	MANUF.	MODEL NO.	FACE SIZE	NECK SIZE / LENGTH	THROW / SLOTS	FRAME TYPE	FINISH	VOLUME DAMPER	FIRE DAMPER	NOTES
SD-1	TITUS	OMNI-AA	24" X 24"	PER PLANS	PER PLANS	LAY-IN	NOTE 1	NOTE 2	N/A	1,2,3
SD-2	TITUS	OMNI-AA	12" X 12"	PER PLANS	PER PLANS	LAY-IN	NOTE 1	NOTE 2	N/A	1,2,3
SD-3	TITUS	272FL	7.5" X 7.5"	6" X 6"	SIDEWALL	SURFACE	NOTE 1	NOTE 2	N/A	1,2
RG-1	TITUS	350FL	24" X 24"	22" X 22"	FIXED	LAY-IN	NOTE 1	NOTE 2	N/A	1,2,3
EG-1	TITUS	350FL	24" X 24"	22" X 22"	FIXED	LAY-IN	NOTE 1	NOTE 2	N/A	1,2,3
EG-2	TITUS	350FL	12" X 12"	10" X 10"	FIXED	LAY-IN	NOTE 1	NOTE 2	N/A	1,2,3
EG-3	TITUS	350FL	7.5" X 7.5"	6" X 6"	SIDEWALL	SURFACE	NOTE 1	NOTE 2	N/A	1,2,3

SPECIAL NOTES: ** ALL DIFFUSERS SELECTED WITH NC RATING < 20 **
1. COORDINATE COLOR WITH ARCHITECT
2. PROVIDE VOLUME DAMPER AT THE FLEX TAP. PROVIDE YOUNG REGULATOR FOR VOLUME DAMPERS IN INACCESSIBLE AREAS.
3. PROVIDE TITUS RAPID MOUNT FRAME FOR MOUNTING IN HARD CEILINGS.

APPROVED ALTERNATES: PRICE, NAILOR, TUTTLE & BAILEY

FAN SCHEDULE

MARK		EF-1	
LOCATION		ROOFTOP	
DUCT SIZE		26" X 26"	
MOUNTING		ROOF	
MANUFACTURER		GREENHECK	
MODEL NUMBER		G-203-B	
STATIC PRESSURE	IN. WG.	1.25	
AIRFLOW	CFM	3020	
MOTOR RPM		1140	
MOTOR INFORMATION	HP	2	
	CURRENT (A)	3.4	
	V	460	
	PH	3	
	Hz	60	
NOTES:		1,3,4	

NOTES:
1. PROVIDE WITH BACKDRAFT DAMPER.
2. FAN SHALL BE CONTROLLED BY THE BUILDING MANAGEMENT SYSTEM TO SCHEDULED TO ALWAYS ON DURING OCCUPIED PERIODS.

APPROVED ALTERNATES: LOREN COOK, S&P, PENN

RGD
CONSULTING ENGINEERS
MECHANICAL | ELECTRICAL | PLUMBING | FIRE PROTECTION | STRUCTURAL
www.rgdengineers.com
MADE IN THE USA
1212 PENNSYLVANIA AVE. SUITE 104, JUPITER, FL 33458 (561) 744-8016
These Drawings are NOT VALID for any purpose which requires the original signature and seal of the engineer unless the original signature and seal are affixed. Drawings not signed and sealed by the engineer shall not be submitted to any authority or used for any purpose where signed and sealed documents are required.

MICHAEL J. BISHOP
FLORIDA P.E. NO. 73005
MECHANICAL ENGINEER
CERT. OF AUTH. 5454
DATE 8.19.2014

1 MECHANICAL SCHEDULES

HARVARD•JOLLY
ARCHITECTURE

Ft. Lauderdale 954-486-7910
Ft. Myers 239-275-7774
Jacksonville 904-398-3300
Orlando 407-841-2777
Punta Gorda 941-575-0403
St. Petersburg 727-894-4611
Tampa 813-286-8205
West Palm Beach 561-478-4457
AAC000119
www.HarvardJolly.com
WEST PALM BEACH, FL

NEW CLASSROOM BUILDING
RIVIERA BEACH MARITIME ACADEMY
RIVIERA BEACH, FLORIDA
CONTRUCTION DOCUEMENTS

Comm. No: 214031.00
Date: 09-24-14
Drawn: RGD
Revised:

copyright 2014

MECHANICAL SCHEDULES

M4.1

PACKAGED ROOF TOP SCHEDULE

UNIT NO. / ZONE		RTU-1	RTU-2
LOCATION		ROOFTOP	ROOFTOP
NOM. TONS		40 0	40 0
EER / IEER		10 3	10 3
MANUFACTURER		TRANE	TRANE
MODEL		TCD480B40	TCD480B41
CFM		10,700	12500
OA CFM		2000	2375
REFRIGERANT		R-410A	R-410A
M.B.T.U.H. UNIT PERFORMANCE	T.C.	456 3	456 2
	S.C.	257 8	144 8
ENTERING TEMPERATURE	DB (°F)	78 1	79 5
	WB (°F)	67 3	67 1
LEAVING TEMPERATURE	DB (°F)	55 6	58 2
	WB (°F)	54 9	55.1
COMPRESSOR	QTY	1 / 1	1 / 1
	RLA	23 / 34	23 / 34
	LRA	158 / 215	158 / 215
COND. FAN	QTY	4	4
	FLA	3.5	3.5
EVAPORATOR	HP	15 0	15 0
	FLA	18 9	18 9
	ESP	2 9	2 9
UNIT POWER	V	460	460
	PH	3	3
	HZ	60	60
ELECTRIC HEAT	kW	NONE	NONE
BR. CIR. AMPACITY	MCA	98	98
	MOCP	125	125
WEIGHT	LBS	6520	6520
NOTES:		1 - 13	1 - 13

APPROVED ALTERNATES: DAIKIN, JCI / YORK

SPECIAL NOTES:
1 ALL EQUIPMENT SHALL BE EQUAL TO THE TRANE EQUIPMENT LISTED IN ALL RESPECTS.
2. ELECTRICAL SPECIFICATIONS LISTED ARE CONSISTENT WITH TRANE EQUIPMENT. ALTERNATE EQUIPMENT MAY VARY. COORDINATE VARIANCES WITH THE ELECTRICAL CONTRACTOR.
3. PROVIDE BAC-NET COMPATIBLE UNITARY CONTROLLER. REF CONTROL SHEETS.
4 CONSULT TRANE DOCUMENTATION TO SET EQUIPMENT TO MEET AIRFLOW REQUIREMENTS AS SHOWN.
5 A PORTION OF THE OUTSIDE AIR PROCESSED BY 100% OUTSIDE AIR UNIT. THE REMAINDER IS PROCESSED BY THE RTU(CO2 CONTROLLED).
6. PROVIDE SEACOAST CURB WITH WIND ANALYSIS CALCULATIONS.
7 SPECIFY WITH FACTORY INSTALLED POWERED CONVENIENCE OUTLET. SUPPLY AIR SMOKE DETECTOR (IF DESIGN AIRFLOW IS GREATER THAN 2000 CFM), THROUGH THE BASE ELECTRICAL AND NON-FUSED DISCONNECT.
8. PROVIDE FACTORY CORROSION PROTECTIVE COATING ON CONDENSING COILS.
9. PROVIDE DUCT MOUNTED CO2 SENSOR KIT(FIELD INSTALLED).
10 PROVIDE HINGED ACCESS PANELS.
11 PROVIDE SST DRAIN PAN W CONDENSATE OVERFLOW SWITCH.
12. PROVIDE INTERNAL TO RTU BAROMETRIC RELIEF DAMPER.
13 PROVIDE 5 YEAR PARTS WARRENTY ON ENTIRE UNIT INCLUDING COMPRESSORS.

100 % OUTSIDE AIR UNIT SCHEDULE

SYSTEM		OAU-1
MANUFACTURER		TRANE
MODEL		OEH480B4EH
CFM		4400
ENTERING TEMPERATURE	DB (°F)	93 0
	WB (°F)	80 0
LEAVING COIL TEMPERATURE	DB (°F)	54 0
	WB (°F)	51 6
REHEAT	DB (°F)	72 0
TEMPERATURE	WB (°F)	62 7
M.B.U.T.H. (@ 93°F AMBIENT TEMP.)	T.C.	432 4
	S.C.	183 9
COMPRESSOR	QTY	1 / 1 (TOTAL 2)
	RLA	23 / 34
COMPRESSOR POWER	V	460
	PH	3
	HZ	60
COND. FAN	QTY	4
	FLA	3 5 (EA)
EVAPORATOR	QTY	1
	HP / FLA	15 / 18.9
	ESP	0 5
EVAPORATOR POWER	V	460
	PH	3
	HZ	60
ELECTRIC HEAT	kW	54 0
SINGLE POINT ELEC. WITH HEAT	MCA	98 4
	MOCP	125
WEIGHT	LBS	6520
NOTES:		1 - 11

APPROVED ALTERNATES. DAIKIN, JCI/ REZNOR

SPECIAL NOTES:
1 THIS UNIT SHALL BE DESIGNED FOR 100% OUTDOOR AIR APPLICATIONS AND SHALL BE SUPPLIED WITH A FULLY NON ENERGY CONSUMING REHEAT. THE UNIT SHALL BE COMPLETELY COMPLIANT WITH THE WRITTEN SPECIFICATIONS CONTAINED IN THE CONSTRUCTION DOCUMENTS
2. THE UNIT SHALL BE FULLY CONTROLLED BY THE MANUFACTURER SUPPLYING THE UNIT
3. THE ELECTRICAL SPECIFICATIONS ARE BASED ON TRANE. ALTERNATE EQUIPMENT ELECTRICAL SPECIFICATIONS AND WT MAY VARY AND SHALL BE COORDINATED AS REQUIRED BY THE CONTRACTOR.
4. THE UNIT SHALL BE CONFIGURED FOR DISCHARGE AIR TEMPERATURE CONTROL.
5 SPECIFY UNIT WITH FOLLOWING OPTIONS:
A. DOUBLE-WALL UNIT CASING (IN EXPOSED AIR STREAMS ONLY).
B HERESITE CORROSION COATING (OR EQUAL) FOR MAIN COOLING COIL, REHEAT COIL, AND CONDENSER COIL.
C. 4 STAGES MINIMUM FOR ELECTRIC HEAT STRIP.
D PROVIDE FACTORY MOUNTED DISCONNECT.
6. MOTORIZED OUTSIDE AIR DAMPER. DAMPER SHOULD BE CONFIGURED TO CLOSE WHEN UNIT IS NOT IN OPERATION.
7. PROVIDE VIBRATION ISOLATION FOR EVAPORATOR FAN & COMPRESSORS.
8. PROVIDE SEACOAST ROOF CURB WITH WIND RATING CALCULATIONS .
9. PROVIDE 5-YEAR PARTS WARRANTY
10. PROVIDE BAC-NET COMPATIBLE UNITARY CONTROLLER.
11 PROVIDE 115V GFI OUTLET

AIR BALANCE SCHEDULE

UNIT	EXHAUST / RELIEF	OUTSIDE AIR / MAKEUP AIR	TOTAL
OA-1		4400	
RTU-1	1800	2000	
RTU-2	2100	2375	
EF-1	3020		
BUILDING TOTALS:	6920	8775	1856

VENTILATION CALCULATIONS

(BASED ON ASHRAE 62.1-2004)

OCCUPANCY CATEGORY	SQ FT	S/F/P	P	CFM/P	CFM/SF	CFM (P)	CFM (AREA)	TOTAL CFM	EXH/SF	TOTAL EXH	NOTES
Education											
Corridors (See Public Spaces)	3384	-	-	-	-	-	-	-	-	-	
Classrooms (Age 9+)	13873	29	486	10	0 12	4858	1665	6520	-	-	
Science Laboratories	1472	40	37	10	0.18	368	265	633	1	1470	
Computer Lab	1261	40	32	10	0 12	315	151	467	-	-	
Offices											
Conference Rooms	458	20	23	5	0 06	115	27	142	-	-	
Office Spaces	1280	200	6	5	0 06	32	77	109	-	-	
Reception Areas	291	33	8	5	0.06	40	17	57	-	-	
Public Spaces											
Toilet Rooms (Public)	1502	0	0	0	0	0	0	0	50/70	1350	
Retail Stores, Sales Floors, and Showroom Floors											
Storage Rooms	507	0	0	0	0.12	0	61		-	200	
Misc											
Electrical Equipment Rooms	390	-	-	-	0 06	-	23		-	-	
							TOTAL CFM REQUIRED:	7928		3020	
							TOTAL CFM PROVIDED:	8775		3020	

NOTES:
FOR ALL CATEGORIES: OCCUPANCY CATEGORY AND DENSITY FROM ASHRAE 62.1-2004, TABLE 6 1 UNLESS OTHERWISE NOTED.

MINI SPLIT SYSTEM SCHEDULE

UNIT NUMBER		AHU 1-16	AHU 1-17A	AHU 2-17	AHU 1-17B
LOCATION		DATA ROOM 1ST FL	MACHINE ROOM	DATA ROOM 2ND FL	ELECTRICAL ROOM 1ST FL
NOMINAL TONS		1 0	1 0	2 5	3 0
SEER		20 5	20.5	18 0	15 1
MANUFACTURER		MITSUBISHI	MITSUDISHI	MITSUDISHI	MITSUBISHI
MODEL # CONDENSER		PUY-A12NHA4	MUY-GE12NA	PUY-A30NHA4	MUY-D36NA-1
MODEL # INDOOR UNIT		PKA-A12HA4	MSY-GE12NA-8	PKA-A30KA4	MSY-D36NA-8
DESIGN AIRFLOW (CFM)		320 - 370 - 425	145-270-237-321-399	635 - 705 - 775	369 639-848-887
MBTUH @75/63° F	T.C.	12 0	12 0	30.0	36 0
	S.C.	8 4	8 4	21 0	25.2
ENTERING TEMPERATURE	DB (°F)	75.0	75 0	75 0	75 0
	WB (°F)	63 0	63.0	63 0	63 0
LEAVING TEMPERATURE	DB (°F)	55.0	55.0	55.0	55 0
	WB (°F)	53 0	53.0	53 0	53 0
COMPRESSOR	RLA / LRA	12 / 14	4 9/6.1	12 / 17.5	16/20
CONDENSER FAN	FLA	0.35	0 78	0.75	0.76
CIRCUIT BREAKER AMPACITY	MCA	13	12	25	21
	MOCP	15	15	40	25
OD DIMENSIONS (IN / LBS)	W X D X H / #	31 5x12x23 6/82	31 5X11 3X21 6 / 77	37 4x14 2x37 1/163	33 1X13X33 4/128
CONDENSER POWER	V	208	208	208	208
	PH	1	1	1	1
	HZ	60	60	60	60
REF. LINE SIZE O.D.	SUCT.	1/2	3/8	5/8	5/8
	LIQ.	1/4	1/4	3/8	3/8
AIR HANDLER FAN MOTOR	FLA	0.33	0 5	0. 36	0 93
	V	DC 24	DC 24	DC 24	DC 24
ID DIMENSIONS (IN / LBS)	W X D X H / #	35 4x9.8x11 6/29	31 6X9 1X11 6/22	46 1 X 11 8 X 14 4 / 40	46X11.6X14 4 /40
HEAT		COOLING ONLY	COOLING ONLY	COOLING ONLY	COOLING ONLY
NOTES:		1 - 6	1 - 6	1 - 8	1 - 8

NOTES:
1. ALTERNATE EQUIPMENT SHALL BE EQUAL TO THE EQUIPMENT LISTED IN ALL RESPECTS.
2. ELECTRICAL SPECIFICATIONS LISTED ARE CONSISTENT WITH THE EQUIPMENT LISTED. ALTERNATE EQUIPMENT MAY VARY. COORDINATE VARIANCES WITH THE ELECTRICAL CONTRACTOR
3. CONSULT MANUFACTURER DOCUMENTATION TO SET EQUIPMENT TO MEET AIRFLOW REQUIREMENTS LISTED.
4. ADDITIONAL REFRIGERANT MAY BE REQUIRED WHERE PIPE LENGTHS EXCEED 70 FT. REFER TO MANUFACTURER DOCUMENTATION FOR PROPER INSTALLATION
5. REFRIGERANT PIPING SHALL BE INSTALLED FROM BACK OF UNIT CONCEALED IN WALL BEHIND UNIT. THERE SHALL BE NO EXPOSED PIPING.
6. PROVIDE PAR-31MAA BACKLIT MA REMOTE CONTROLLER

APPROVED ALTERNATES: LG, PANASONIC, DAIKIN

1 MECHANICAL DETAILS

RGD
CONSULTING ENGINEERS
MECHANICAL | ELECTRICAL | PLUMBING | FIRE PROTECTION | STRUCTURAL
www.rgdengineers.com
MADE IN THE USA
1212 NORTHAMPTONWN BLD. SUITE 104, JUPITER, FL 33458 (561) 743-0164

These Drawings are NOT VALID for any purpose which requires the original signature and seal of the engineer unless the original signature and seal are affixed. Drawings not signed and sealed by the engineer shall not be submitted to any authority or used for any purpose where signed and sealed documents are required.

SCALE 1/4" = 1'-0"

MICHAEL J BISHOP
FLORIDA P.E. NO. 73008
MECHANICAL ENGINEER
CERT OF AUTH. 9454

DATE 8.19.2014

HARVARD•JOLLY
ARCHITECTURE
Ft Lauderdale 954-486-7910
Ft Myers 239-275-7774
Jacksonville 904-398-3300
Orlando 407-777-7777
Punta Gorda 941-575-0403
St. Petersburg 727-896-4611
Tampa 813-286-2626
West Palm Beach 561-478-4457
AAC000119
www.harvardjolly.com
WEST PALM BEACH, FL

NEW CLASSROOM BUILDING
RIVIERA BEACH MARITIME ACADEMY
RIVIERA BEACH, FLORIDA
CONTRUCTION DOCUEMENTS

Comm. No: 214031.00
Date: 09-24-14
Drawn: RGD
Revised:

copyright 2014

MECHANICAL SCHEDULES

M4.2

NOTES. SPACE PERMITTING, CONTRACTOR MAY USE RADIUS ELBOW

VANES TO BE PRE-ASSEMBLED ON RUNNER PLATE

GALVANIZED VANES TO BE USED FOR EITHER GALVANIZED OR ALUMINUM DUCTWORK.

(FOR SHEET METAL DUCTS SEE LATEST EDITION OF SMACNA STANDARDS)

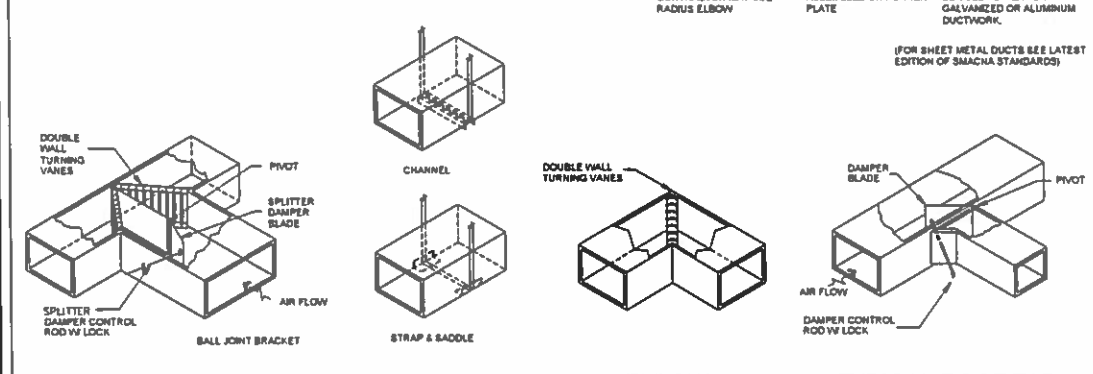

1 HVAC DUCT DETAILS

NOTE: SEE PLANS FOR DUCT SIZES. N.T.S.

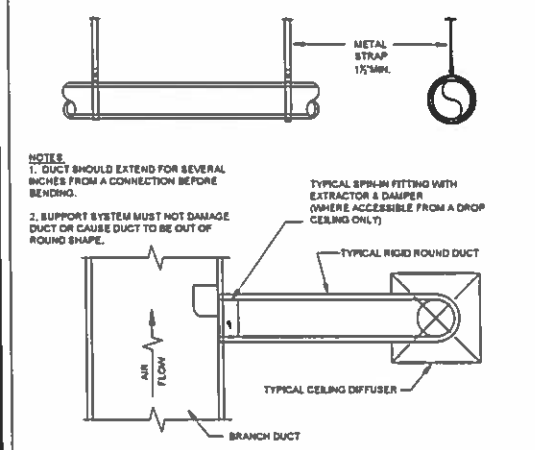

2 RIGID ROUND DUCT SUPPORT & TAKE-OFF W/ DAMPER DETAIL

N.T.S

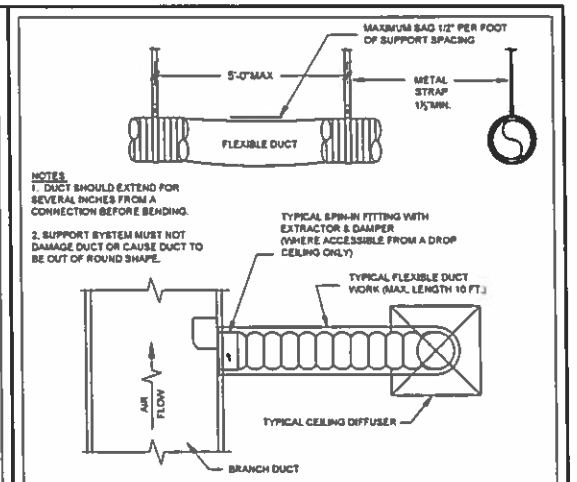

3 FLEXIBLE DUCT SUPPORT & TAKE-OFF W/ DAMPER DETAIL

N.T.S

REFERENCE INSTALLATION DETAILS

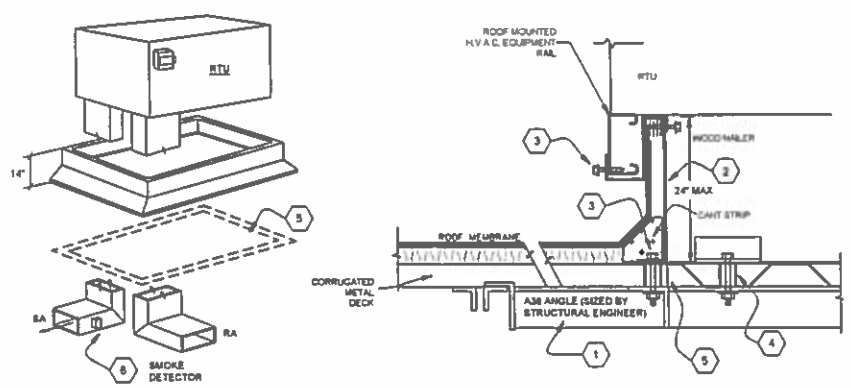

KEYNOTES

1. PROVIDE (A-36) STEEL ANGLE BRIDGING BETWEEN JOISTS AND AS REQUIRED TO SUPPORT THE CURB CONTINUOUS AROUND THE PERIMETER. ALL STRUCTURAL STEEL FABRICATION REQUIRED FOR THE SUPPORT STRUCTURE SHALL BE INSTALLED STRICTLY IN ACCORDANCE WITH THE SPECIFICATIONS PROVIDED BY THE SHELL STRUCTURAL ENGINEER. THE CONTRACTOR SHALL REFER TO STRUCTURIAL DETAILS.

2. ROOF CURB SHALL BE PROVIDED BY THE HVAC EQUIPMENT MANUFACTURER AND MATCHED TO THE RTU. INSTALLED CURB SHALL EXTEND 8" MIN ABOVE THE ROOF MEMBRANE.

3. APPLY SIX #10 TEK SCREWS PER RESTRAINT BRACKET, 2" O.C. SPACING, HOLDING HVAC UNIT TO RESTRAINT BRACKET.

4. PROVIDE 1½"SCHEDULE 40 PIPE SLEEVE SPACERS TO SUPPORT THE CURB FLANGE. ADJUST LENGTH OF SLEEVE AS REQUIRED TO MATCH THE RECESS IN THE ROOF SHEETING. DO NOT WARP THE CURB FLANGE OR CRUSH THE CORRUGATED ROOFING.

5. CUT THE ROOF SHEETING BACK AS REQUIRED TO ACCESS THE BOTTOM RAIL OF THE RTU FROM THE INSIDE OF THE CURB.

6. PROVIDE SMOKE DETECTORS IN ACCORDANCE WITH FBC-M 2007 SECTION 606. PROVIDE SA DETECTORS ON UNITS SERVING EGRESS, OR UNITS GREATER THAN 2000 CFM OR AS AGGREGATE SYSTEMS GREATER THAN 2000 CFM. THE DETECTORS SHALL BE UL268A W/REMOTE TEST STATION. THE DETECTORS SHALL BE FURNISHED BY THE ELECTRICAL CONTRACTOR (IF BUILDING EQUIPPED WITH A FIRE ALARM SYSTEM) AND INSTALLED BY THE MECHANICAL CONTRACTOR. ELECTRICAL INTERCONNECTION BY THE ELECTRICAL CONTRACTOR. IF FIRE ALARM SYSTEM IS PRESENT, SMOKE CUT OFF MUST BE INTERLOCKED WITH ALARM SYSTEM.

7. THE DUCT SIZES SHOWN ON THE PLAN MAY BE LARGER THAT THE OPENING PROVIDED ON THE RTU. THE CONTRACTOR SHALL PROVIDE TRANSITIONS AS REQUIRED AS SOON AS POSSIBLE AFTER LEAVING THE RTU.

8. "IMPORTANT" RTU MUST BE LEVEL TO INSURE PROPER CONDENSATE REMOVAL.

4 RTU MOUNTING DETAIL

1 MECHANICAL DETAILS

RGD
CONSULTING ENGINEERS
MECHANICAL | ELECTRICAL | PLUMBING | FIRE PROTECTION | STRUCTURAL
www.rgdengineers.com
MADE IN THE USA
4212 PRESIDENTIAL BLV. SUITE 104, JUPITER, FL 33458 (561) 741-8016
These Drawings are NOT SEALED for any purpose which requires the original signature and seal of the engineer unless the original signature and seal are affixed. Drawings not signed and sealed by the engineer shall not be submitted to any authority or used for any purpose where signed and sealed documents are required.

MICHAEL J. BISHOP
FL CERTIFICATE NO. 72008
MECHANICAL ENGINEER
CERT. OF AUTH. 5464
DATE 9.19.2014

HARVARD•JOLLY
ARCHITECTURE

Ft. Lauderdale 954-466-7910
Ft. Myers 239-275-7774
Jacksonville 904-356-3300
Orlando 407-872-7777
Punta Gorda 941-575-0403
St. Petersburg 727-896-4611
Tampa 813-286-4205
West Palm Beach 561-478-4457
AA0001118
www.HarvardJolly.com
WEST PALM BEACH, FL

NEW CLASSROOM BUILDING
RIVIERA BEACH MARITIME ACADEMY
RIVIERA BEACH, FLORIDA
CONTRUCTION DOCUEMENTS

Comm. No: 214031.00
Date: 09-24-14
Drawn: RGD
Revised:

copyright 2014

MECHANICAL DETAILS

M5.1

TYPICAL INSTALLATION DETAILS

(A) RETAINING ANGLES. SUPPLIED BY THE MANUFACTURER MINIMUM 1-1/2" X 1-1/2" X 0.054 (18 GA.) RETAINING ANGLES MUST OVERLAP STRUCTURE OPENING 1" MINIMUM AND COVER CORNERS OF OPENINGS AS SHOWN.
(B) CLEARANCE: 1/4" PER LINEAR FOOT OF DAMPER WIDTH AND HEIGHT WITH A MINIMUM CLEARANCE OF 1/4"
(C) STEEL SLEEVE - FACTORY INSTALLED - DAMPER SLEEVE SHALL EXTEND A MAX OF 8" ON EITHER SIDE OF FLOOR OR WALL ON EACH SIDE.
(D) GREENHECK MODEL DFD-150 FIRE DAMPER
(E) SECURE RETAINING ANGLES TO SLEEVE NO. 10 STEEL SCREWS 6" O.C. AND 2" FROM EACH END. RIVETS, BOLTS & NUTS, AND WELDS CAN BE USED ALTERNATIVLY REFERENCE INSTALLATION INSTRUCTIONS.
(F) CONNECT DUCT TO SLEEVE WITH BREAKAWAY CONNECTION WITH A MAXIMUM OF (2) #10 SHEET METAL SCREWS ON EACH SIDE AND ON THE BOTTOM LOCATED IN ON EACH SIDE AND ON THE BOTTOM LOCATED IN THE CENTER OF THE SLIP POCKET.
(G) FULLY GASKETED HINGED CAM LOCK FIRE DAMPER ACCESS DOOR. LABEL "FIRE DAMPER ACCESS".

NOTE: IF DIFFERENT MANUFACTURE IS INSTALLED, INSTALL PER MANUFACTURES INSTALLATION INSTRUCTIONS.

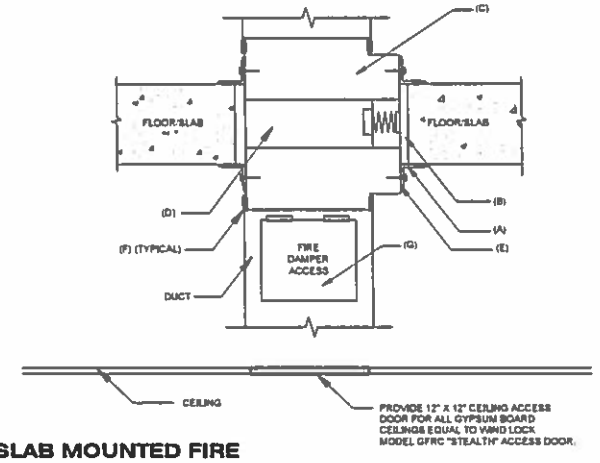

1 FLOOR/SLAB MOUNTED FIRE DAMPER DETAIL

ITEM DESCRIPTION

1. ACTUATOR (LOCATION MAY VARY). DAMPER MAY BE SUPPLIED WITHOUT ACTUATOR INSTALLED. GREENHECK'S UL LISTED FIRE/SMOKE DAMPER ACTUATORS MAY BE FIELD INSTALLED IF PROPERLY LABELED. SEE ACTUATOR INSTALLATION INSTRUCTIONS FOR FIELD MOUNTING OF DAMPER ACTUATORS.
2. SEAL THE JOINT BETWEEN THE DAMPER AND THE DUCT USING DOW CORNING RTV 732 SEALANT OR GE1200 SERIES SILICONE CONSTRUCTION ADHESIVE
3. DAMPER OPERATING JACK SHAFT
4. GREENHECK MODEL SMD - 202 UL555S-APPROVED CLASS II DAMPER RATED 350°F
5. DUCT WORK
6. ATTACH DAMPER TO DUCT WORK USING #10 SHEET METAL SCREWS SPACED EVERY 6" O.C. AND AT LEAST 2" FROM CORNERS.
7. THE PLANE OF THE CLOSED DAMPER MUST BE WITHIN 24" OF THE SMOKE PARTITION AND BEFORE ANY DUCT INLETS OR OUTLETS.

NOTES

1. SMOKE DAMPER SHALL BE OPEN WITH POWER ON, AND CLOSED WITH POWER OFF.
2. INSTALL PER MANUFACTURER'S INSTRUCTIONS WHERE INSTRUCTIONS DIFFER THAN THIS DETAIL.
3. THE PLANE OF THE DAMPER BLADES MUST BE INSTALLED WITHIN 24" OF THE RATED SMOKE BARRIER.

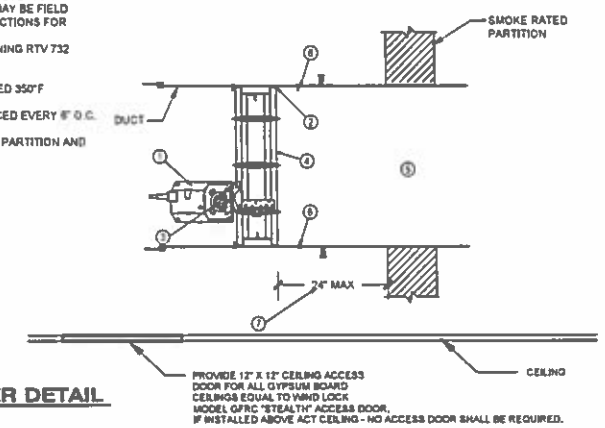

2 SMOKE DAMPER DETAIL

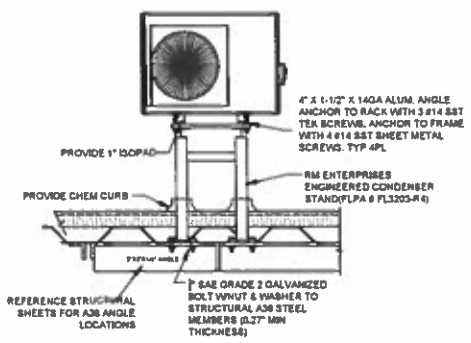

3 MITSUBISHI MINISPLIT CU TIEDOWN DETAIL

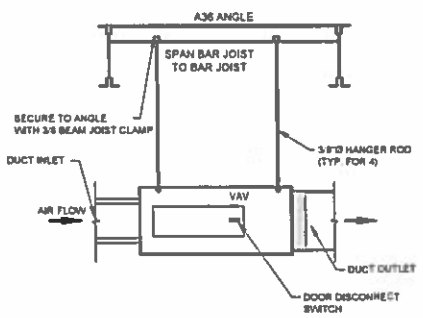

4 VAV HANGING DETAIL

N.T.S.

KEYNOTES

1 PROVIDE A PATE CURB ASSEMBLY. CONTRACTOR SHALL INSTALL IN ACCORDANCE WITH THE MANUFACTURER'S INSTALLATION INSTRUCTIONS

2 MOUNT CURB TO PIPE EXTENSION WITH #12 TEK SCREWS 3" FROM EACH CORNER AND 6" O.C. IN BETWEEN

3 SECURE THE CURB TO THE ROOF STRUCTURE WITH 1/4" X 3" LONG TAPCONS LOCATE 2" FROM THE CORNERS AND 6" O.C. ON ALL SIDES

4 PROVIDE PIPE SLEEVES AS SHOWN FOR REFRIGERANT BUNDLES. CONTRACTOR ADJUST SIZE AND NUMBER OF PIPE PENETRATIONS AS REQUIRED

5 SEAL PENETRATION WITH FOAM AFTER INSTALLATION OF REFRIGERANT BUNDLES

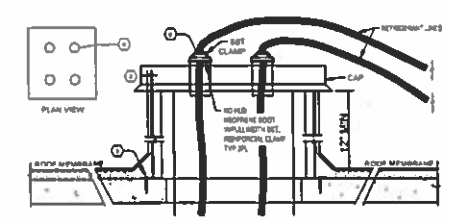

5 REFR. ROOF CURB DETAIL

N.T.S.

1 MECHANICAL DETAILS

RGD
CONSULTING ENGINEERS
MECHANICAL | ELECTRICAL | FIRE PROTECTION | STRUCTURAL
www.rgdengineers.com
MADE IN THE USA
1213 PROSPERITY FARMS RD. SUITE 104, JUPITER, FL 33458 (561) 745-8116
These Drawings are NOT SEALED for any purpose which requires the original signature and seal of the engineer unless the original signature and seal are affixed. Drawings not signed and sealed by the engineer shall not be submitted to any authority or used for any purpose where signed and sealed documents are required.

MICHAEL J. BISHOP
FLORIDA P.E. NO. 73008
MECHANICAL ENGINEER
CERT OF AUTH. 9454
DATE 9.19.2014

HARVARD•JOLLY
ARCHITECTURE

Ft. Lauderdale 954-495-7910
Ft. Myers 239-275-7774
Jacksonville 904-398-3300
Orlando 407-657-7777
Punta Gorda 941-575-0403
St. Petersburg 727-896-4611
Tampa 813-286-4205
West Palm Beach 561-478-4457
AAC000119
www.harvardjolly.com
WEST PALM BEACH, FL

NEW CLASSROOM BUILDING
RIVIERA BEACH MARITIME ACADEMY
RIVIERA BEACH, FLORIDA
CONTRUCTION DOCUEMENTS

Comm. No: 214031.00
Date: 09-24-14
Drawn: RGD
Revised:

copyright 2014

MECHANICAL DETAILS

M5.2

VAV RTU CONTROLLER SHALL FOLLOW THE FOLLOWING SEQUENCE OF OPERATION
BUILDING AUTOMATION SYSTEM INTERFACE: THE CONTROL SYSTEM SHALL SEND THE CONTROLLER OCCUPIED BYPASS, OCCUPIED / UNOCCUPIED MODES IF COMMUNICATION IS LOST WITH THE CONTROL SYSTEM THE CONTROLLER SHALL OPERATE USING DEFAULT MODES AND SETPOINTS.

OCCUPIED MODE SUPPLY FAN SHALL RUN CONTINUOUSLY. OA DAMPER SHALL OPEN. COOLING COIL SHALL STAGE TO MAINTAIN DISCHARGE AIR TEMPERATURE SETPOINT AND SUPPLY FAN VFD SHALL MODULATE TO MAINTAIN SA STATIC PRESSURE SETPOINT.

UNOCCUPIED MODE: SUPPLY FAN SHALL BE OFF. OA DAMPER SHALL CLOSE.

OCCUPIED BYPASS: THE BAS SHALL MONITOR THE STATUS OF THE "ON" AND "CANCEL" BUTTONS OF THE SPACE TEMPERATURE SENSORS. WHEN AN OCCUPIED BYPASS REQUEST IS RECEIVED FROM A SPACE SENSOR, THE UNIT SHALL TRANSITION FROM ITS CURRENT OCCUPANCY MODE TO OCCUPIED BYPASS MODE AND THE UNIT SHALL FOLLOW THE SEQUENCE OF OPERATIONS DESCRIBED ON OCCUPIED MODE.

COOLING MODE: THE UNIT CONTROLLER SHALL USE THE DISCHARGE AIR TEMPERATURE SENSOR AND DISCHARGE AIR TEMPERATURE COOLING SETPOINT (55 F) TO DETERMINE WHEN TO INITIATE REQUESTS FOR COOLING. DISCHARGE AIR SETPOINT SHALL BE MAINTAINED BY STAGING THE DX COOLING AS REQUIRED TO MAINTAIN THE DISCHARGE AIR SETPOINT.

SUPPLY FAN DURING OCCUPIED MODE THE SUPPLY FAN SHALL RUN CONTINUOUSLY. A DIFFERENTIAL PRESSURE SWITCH SHALL MONITOR THE DIFFERENTIAL PRESSURE ACROSS THE FAN. IF THE SWITCH DOES NOT OPEN WITHIN 40 SECONDS AFTER A REQUEST FOR FAN OPERATION A FAN FAILURE ALARM SHALL BE ANNUNCIATED AT THE BAS. THE UNIT SHALL STOP. REQUIRING A MANUAL RESET.

SUPPLY DUCT STATIC PRESSURE CONTROL THE UNIT CONTROLLER SHALL MODULATE THE OUTPUT TO THE VFD AS REQUIRED TO MAINTAIN THE DUCT STATIC PRESSURE SETPOINT OF 1.5 INCHES OF W.C. (ADJ.). IF THE DUCT STATIC PRESSURE FALLS BELOW 1.0 INCHES OF W.C. (ADJ.) THE UNIT CONTROLLER SHALL INCREASE THE OUTPUT TO THE VFD TO MAINTAIN SETPOINT. IF THE DUCT STATIC PRESSURE RISES ABOVE 1.7 INCHES OF W.C. (ADJ.) THE UNIT CONTROLLER SHALL DECREASE THE OUTPUT TO THE VFD TO MAINTAIN SETPOINT. THE SUPPLY DUCT STATIC PRESSURE SENSOR SHALL ALSO ACT AS A HIGH DUCT STATIC PRESSURE SAFETY AND SHALL SHUT DOWN THE UNIT IN THE EVENT THAT THE DUCT STATIC PRESSURE REACHES 2.00 INCHES OF W.C. (ADJ.). A RESET SHALL BE REQUIRED TO RESTART THE UNIT.

FILTER STATUS A DIFFERENTIAL PRESSURE SWITCH SHALL MONITOR THE DIFFERENTIAL PRESSURE ACROSS THE FILTER WHEN THE FAN IS RUNNING. IF THE SWITCH CLOSES FOR 2 MINUTES AFTER A REQUEST FOR FAN OPERATION A DIRTY FILTER ALARM SHALL BE ANNUNCIATED.

BAS CO2 CONTROL THE CONTROLLER SHALL MONITOR THE RETURN AIR CO2 CONCENTRATION LEVEL AND MODULATE THE OA DAMPER OPEN TO MAINTAIN AN CO2 CONCENTRATION SETPOINT. AN ALARM SHALL BE SENT TO THE BAS WHEN THE RETURN AIR CO2 CONCENTRATION LEVEL IS HIGHER THAN SETPOINT (750 PPM ADJ.)

VAV RTUs

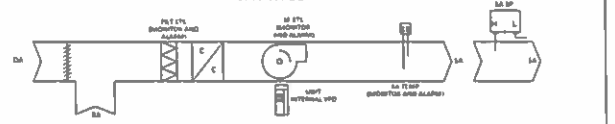

RTUs SEQUENCE OF OPERATIONS (TYPICAL OF 2)
THE UNIT SHALL BE CONTROLLED THROUGH ITS OWN DEDICATED CONTROL PANEL. THE BAS SYSTEM SHALL MONITOR USING A BACNET COMMUNICATION THE FOLLOWING POINTS ON THE UNIT
1. SUPPLY FAN RUN STATUS
2. SUPPLY AIR TEMPERATURE.
3. FILTER STATUS.

THE CONTROL SYSTEM SHALL SEND AN ALARM WHEN
- SUPPLY FAN FAILURE.
- HIGH/LOW SUPPLY AIR TEMP
- FILTER DIRTY

MANUFACTURER'S FIELD INSTALLED DEVICES INSTALLED BY CONTROL CONTRACTOR:
CONTROL OF UNIT DURING EMERGENCY MODE BY DIV 16

NETWORK

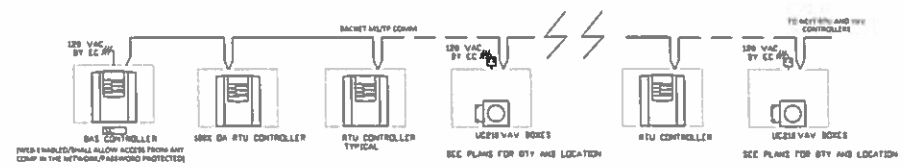

GENERAL NOTES
-AC IP ADDRESS BY OTHERS
-BUILDING CONTROLLER SHALL BE WEB-ENABLED AND ALLOW OWNER FREE REMOTE ACCESS TO CHANGE SETPOINTS, SCHEDULES, AND RECEIVE ALARMS
-PROVIDE 3-D GRAPHICS
-SPACE SENSORS LOCATED AS PER PLANS
-VAV MANUFACTURE TO PROVIDE FACTORY MOUNTING AND WIRING OF DDC VAV BOX CONTROLLER
-ON 16 ELECTRICAL CONTRACTOR TO PROVIDE 120/277 VAV POWER TO ALL VAV BOXES
-MOTORIZED DAMPERS BY OTHERS
-HVAC EQUIPMENT SEQUENCE OF OPERATIONS DURING EMERGENCY MODE BY FIRE
-VAV ROOFTOP UNITS WILL BE SCHEDULED FOR ALL OCCUPIED PERIOD OF TIME (REGULAR CLASSES, AFTER-HOUR FUNCTIONS, TEACHERS WORK DAYS, ETC) AND THE 100% OA UNIT WILL BE SCHEDULED FOR HIGHER OCCUPANCY (OCCUPIED PERIOD OF TIME (REGULAR CLASSES & LARGE AFTER-HOUR FUNCTIONS ONLY).

BASIS OF DESIGN TRANE (954) 485-8999 TRACE 700

VAV BOX WITH HTR

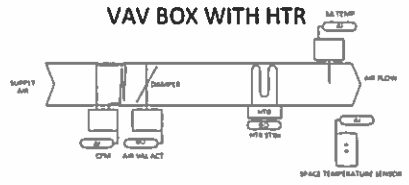

VAV BOXES WITH HTR SEQUENCE OF OPERATIONS

BUILDING AUTOMATION SYSTEM INTERFACE: THE BUILDING AUTOMATION SYSTEM (BAS) SHALL SEND THE CONTROLLER OCCUPIED BYPASS, OCCUPIED AND UNOCCUPIED COMMANDS. THE BAS MAY ALSO SEND A HEAT/COOL MODE, PRIORITY SHUTDOWN COMMANDS, SPACE TEMPERATURE AND/OR SPACE TEMPERATURE SETPOINT. IF COMMUNICATION IS LOST WITH THE BAS, THE VAV CONTROLLER SHALL OPERATE USING ITS LOCAL SETPOINTS.

OCCUPANCY MODE: THE OCCUPANCY MODE SHALL BE COMMUNICATED OR HARDWIRED TO THE VAV VIA A BINARY INPUT. VALID OCCUPANCY MODES FOR THE VAV SHALL BE
OCCUPIED: NORMAL OPERATING MODE FOR OCCUPIED SPACES OR DAYTIME OPERATION. WHEN THE UNIT IS IN THE OCCUPIED MODE THE VAV SHALL MAINTAIN THE SPACE TEMPERATURE AT THE ACTIVE OCCUPIED HEATING OR COOLING SETPOINT. APPLICABLE VENTILATION AND AIRFLOW SETPOINTS SHALL BE ENFORCED. THE OCCUPIED MODE SHALL BE THE DEFAULT MODE OF THE VAV.
UNOCCUPIED: NORMAL OPERATING MODE FOR UNOCCUPIED SPACES OR NIGHTTIME OPERATION. WHEN THE UNIT IS IN UNOCCUPIED MODE THE VAV CONTROLLER SHALL CLOSE TO ITS MINIMUM POSITION.
OCCUPIED BYPASS MODE USED TO TEMPORARILY PLACE THE UNIT INTO THE OCCUPIED OPERATION. TENANTS SHALL BE ABLE TO OVERRIDE THE UNOCCUPIED MODE FROM THE SPACE SENSOR. THE OVERRIDE SHALL LAST FOR A MAXIMUM OF 2 HOURS (ADJ.). THE TENANTS SHALL BE ABLE TO CANCEL THE OVERRIDE FROM THE SPACE SENSOR AT ANY TIME, DURING THE OVERRIDE THE UNIT SHALL OPERATE IN OCCUPIED MODE.

HEAT/COOL MODE: THE HEAT/COOL MODE SHALL BE SET BY A COMMUNICATED VALUE OR AUTOMATICALLY BY THE VAV IN STANDALONE OR AUTO MODE. THE VAV SHALL COMPARE THE PRIMARY AIR TEMPERATURE WITH THE CONFIGURED AUTO CHANGEOVER SETPOINT TO DETERMINE IF THE AIR IS "HOT" OR "COLD". HEATING MODE SHALL COMMAND THE VAV TO HEAT ONLY IF BOTH THE PRIMARY AIR TEMPERATURE IS HOT. COOLING MODE SHALL COMMAND THE VAV TO COOL ONLY IF BOTH THE PRIMARY AIR TEMPERATURE IS COLD.
HEATING SETPOINT: THE SPACE TEMPERATURE SETPOINT SHALL BE DETERMINED EITHER BY A LOCAL (E.G. THUMBWHEEL) SETPOINT. THE VAV DEFAULT SETPOINT OR A COMMUNICATED VALUE. THE VAV SHALL USE THE LOCALLY STORED DEFAULT SETPOINTS WHEN NEITHER A LOCAL SETPOINT NOR COMMUNICATED SETPOINT IS PRESENT. IF BOTH A LOCAL SETPOINT AND COMMUNICATED SETPOINT EXIST THE VAV SHALL USE THE COMMUNICATED VALUE.

COOLING MODE: WHEN THE UNIT IS IN COOLING MODE. THE VAV CONTROLLER SHALL MAINTAIN THE SPACE TEMPERATURE AT THE ACTIVE COOLING SETPOINT BY MODULATING THE AIRFLOW BETWEEN THE ACTIVE COOLING MINIMUM AIRFLOW SETPOINT TO THE MAXIMUM COOLING AIRFLOW SETPOINT.
THE VAV SHALL USE THE MEASURED SPACE TEMPERATURE AND THE ACTIVE COOLING SETPOINT TO DETERMINE THE REQUESTED COOLING CAPACITY OF THE UNIT. THE OUTPUTS WILL BE CONTROLLED BASED ON THE UNIT CONFIGURATION AND THE REQUESTED COOLING CAPACITY

HEATING MODE: WHEN THE UNIT IS IN HEATING MODE. THE VAV CONTROLLER SHALL MAINTAIN THE SPACE TEMPERATURE AT THE ACTIVE HEATING SETPOINT BY MODULATING THE AIRFLOW BETWEEN THE ACTIVE HEATING MINIMUM AIRFLOW SETPOINT TO THE MAXIMUM HEATING AIRFLOW SETPOINT.
THE VAV CONTROLLER SHALL USE THE MEASURED SPACE TEMPERATURE AND THE ACTIVE HEATING SETPOINT TO DETERMINE THE REQUESTED HEATING CAPACITY OF THE UNIT. THE OUTPUTS WILL BE CONTROLLED BASED ON THE UNIT CONFIGURATION AND THE REQUESTED HEATING CAPACITY.

HEATING CONTROL: REHEAT WILL ONLY BE ALLOWED WHEN THE PRIMARY AIR TEMPERATURE IS 5.0 DEG. F BELOW THE COMPUTERIZED REHEAT ENABLE SETPOINT OF 75.0 DEG F (ADJ.). THE REHEAT SHALL BE ENABLED WHEN THE SPACE TEMPERATURE DROPS BELOW THE ACTIVE COOLING SETPOINT AND THE AIRFLOW IS AT THE MINIMUM COOLING AIRFLOW SETPOINT. DURING REHEAT THE VAV SHALL OPERATE AT ITS MINIMUM HEATING AIRFLOW SETPOINT AND ENERGIZE THE HEAT AS FOLLOWS

PULSE WIDTH MODULATED HEAT (PWM): IF THE SPACE TEMPERATURE IS AT THE HEATING SETPOINT, ENERGIZE FIRST STAGE OF HEAT. THE SECOND STAGE OF HEATING SHALL BE THE PWM BASED ON TIME AND TEMPERATURE DEVIATION FROM SETPOINT. DUTY CYCLE THESE STAGES ON A THREE-MINUTE WINDOW. STAGE 1 SHALL MODULATE FROM 0-49% DEVIATION AND BE ON CONTINUOUSLY ABOVE 50%. STAGE 2 SHALL MODULATE FROM 50-100% DEVIATION.

SPACE SENSOR FAILURE: IF THERE IS A FAULT WITH THE OPERATION OF THE ZONE SENSOR AN ALARM SHALL BE ANNUNCIATED AT THE BAS. SPACE SENSOR FAILURE SHALL CAUSE THE VAV TO DRIVE THE DAMPER TO MINIMUM AIR FLOW IF THE VAV IS IN THE OCCUPIED MODE, OR DRIVE IT CLOSED IF THE VAV IS IN THE UNOCCUPIED MODE.

VAV BOXES WITH HTR POINT LIST

SYSTEM POINT DESCRIPTION	GRAPHIC	HARDWIRE INPUT	HARDWIRE OUTPUT	SOFTWARE POINT	HARDWARE SWITCHES	DEFAULT VALUE	HIGH ANALOG LIMIT	LOW ANALOG LIMIT	BINARY	LATCH DIAGNOSTIC	SENSOR FAIL	COMMUNICATION FAIL	EMERGENCIES	NOTES
	POINT TYPE						ALARMS							
DISCHARGE AIR TEMP	Y	AI						2	1		Y		SENSOR FAILURE	
SPACE AIR TEMP	Y	AI						2	1		Y		SENSOR FAILURE	NOTE 2
SUPPLY AIR FLOW	Y	AI												
VAV DAMPER	Y		AO											
HEATING OUTPUT	Y		AO											
OCCUPIED COOLING SP				Y		74°F	5	0						
OCCUPIED HEATING SP				Y		68°F	5	0						
MIN COOLING AIR FLOW SP				Y										NOTE 1
MAX COOLING AIR FLOW SP				Y										NOTE 1
MIN HEATING AIR FLOW SP				Y										NOTE 1
MAX HEATING AIR FLOW SP				Y										NOTE 1
OCCUP BYPASS TIMER				Y		2 HRS								
BAS COMM STATE	Y			Y								Y		NOTE 2
GENERAL NOTES	1: SEE VAV SCHEDULE FOR VALUES													
	2: DISPLAY AT BAS USER INTERFACE													
	3: SEE PLANS FOR LOCATION													

DIRECT DIGITAL CONTROL SYSTEMS
PART 1 - GENERAL
1.1 DESCRIPTION
A. THE BUILDING AUTOMATION SYSTEM SHALL BE AS INDICATED ON THE DRAWINGS AND DESCRIBED IN THESE SPECIFICATIONS. SYSTEM MUST BE FULLY INTEGRATED AND COORDINATED WITH MECHANICAL EQUIPMENT DDC CONTROLLERS PURCHASED AND INSTALLED IN THE EQUIPMENT MANUFACTURER'S FACTORY AS SPECIFIED IN THOSE SECTIONS. THE INTENT OF THE BAS IS TO INTEGRATE ALL MECHANICAL EQUIPMENT INTO ONE SYSTEM FOR GLOBAL MONITORING, CONTROL, AND ALARMING ASSOCIATED WITH THE BUILDING. IT IS THE BAS MANUFACTURER'S RESPONSIBILITY TO PROVIDE ALL THE DESIGN, ENGINEERING, AND FIELD COORDINATION REQUIRED TO ENSURE ALL EQUIPMENT SEQUENCE OF OPERATIONS ARE MET AS SPECIFIED AND THE DESIGNATED BAS OPERATORS HAVE THE CAPABILITY OF MANAGING THE BUILDING MECHANICAL SYSTEM TO ENSURE OCCUPANT COMFORT WHILE MAINTAINING ENERGY EFFICIENCY.
B. THE BAS SHALL MEET BACNET COMMUNICATION STANDARDS TO ENSURE THE SYSTEM MAINTAINS INTEROPERABILITY TO AVOID PROPRIETARY ARRANGEMENTS THAT WILL MAKE IT DIFFICULT FOR THE OWNER TO CONNECT OTHER BAS MANUFACTURERS IN FUTURE PROJECTS.
C. THE MECHANICAL SYSTEMS AND TERMINAL DEVICES SHALL BE PROVIDED WITH FACTORY MOUNTED DDC CONTROLS THAT WILL PERMIT EACH SYSTEM TO OPERATE IN A STANDALONE FASHION AS SUCH IN THE EVENT OF A BAS NETWORK COMMUNICATION FAILURE OR THE LOSS OF AN INDIVIDUAL CONTROLLER. THE OTHER DDC CONTROLLERS SHALL CONTINUE TO INDEPENDENTLY OPERATE AND COMMUNICATE TO THE BAS.
D. COMMUNICATION BETWEEN DDC CONTROLLERS AND ALL WORKSTATIONS SHALL BE OVER A HIGH-SPEED NETWORK. ALL NODES ON THIS NETWORK SHALL BE PEERS. THE OPERATOR SHALL NOT HAVE TO KNOW THE CONTROLLER IDENTIFIER OR LOCATION TO VIEW OR CONTROL A POINT (OBJECT). APPLICATION SPECIFIC CONTROLLERS SHALL BE CONFIGURED BY THE BUILDING CONTROLLERS TO UPDATE POINT INFORMATION AND ALARM INFORMATION GLOBALLY.
E. THE BAS MANUFACTURER SHALL PROVIDE ALL HARDWARE AND SOFTWARE NECESSARY TO IMPLEMENT THE FUNCTIONS AND SEQUENCE OF OPERATIONS SPECIFIED.
1.2 APPROVED BAS MANUFACTURERS
A. MANUFACTURERS
1. BASIS OF DESIGN TRANE
1.3 QUALITY ASSURANCE
A. BAS MANUFACTURER QUALIFICATIONS
1. THE BAS MANUFACTURER SHALL HAVE AN ESTABLISHED BUSINESS OFFICE WITHIN 85 MILES OF THE PROJECT SITE AND MUST PROVIDE 24 HOURS/DAY 7 DAYS/WEEK RESPONSE IN THE EVENT OF A CUSTOMER WARRANTY OR SERVICE CALL.
2. THE BAS MANUFACTURER SHALL HAVE FACTORY TRAINED AND CERTIFIED PERSONNEL PROVIDING ALL ENGINEERING, SERVICE, STARTUP AND COMMISSIONING FIELD LABOR FOR THE PROJECT FROM THEIR LOCAL OFFICE LOCATION. BAS MANUFACTURER SHALL BE ABLE TO PROVIDE TRAINING CERTIFICATIONS FOR ALL LOCAL OFFICE PERSONNEL UPON REQUEST.
3. THE BAS SHALL BE PROVIDED BY A SINGLE MANUFACTURER AND THE MANUFACTURER'S EQUIPMENT MUST CONSIST OF OPERATOR WORKSTATION SOFTWARE, WEB-BASED HARDWARE/SOFTWARE, OPEN STANDARD PROTOCOL HARDWARE/SOFTWARE, CUSTOM APPLICATION PROGRAMMING LANGUAGE, GRAPHICAL PROGRAMMING LANGUAGE, BUILDING CONTROLLERS, CUSTOM APPLICATION CONTROLLERS, AND APPLICATION SPECIFIC CONTROLLERS. ALL OTHER PRODUCTS SPECIFIED HEREIN (I.E. SENSORS, VALVES, DAMPERS, ACTUATORS, ETC.) NEED NOT BE MANUFACTURED BY THE BAS MANUFACTURER LISTED IN SECTION 2.01 OF THIS SPECIFICATION.
4. INDEPENDENT REPRESENTATIVES OF BAS MANUFACTURERS ARE NOT ACCEPTABLE. BAS VENDOR MUST BE CORPORATE OWNED ENTITY OF BAS MANUFACTURER.
1.4 SUBMITTALS
A. BAS MANUFACTURER SHALL PROVIDE SHOP DRAWINGS AND MANUFACTURERS' STANDARD SPECIFICATION DATA SHEETS ON ALL HARDWARE AND SOFTWARE BEING PROVIDED FOR THIS PROJECT. NO WORK MAY BEGIN ON ANY SEGMENT OF THIS PROJECT UNTIL THE ENGINEER AND OWNER HAVE REVIEWED SUBMITTALS FOR CONFORMITY WITH THE PLAN AND SPECIFICATIONS. FIVE (5) COPIES ARE REQUIRED. ALL SHOP DRAWINGS SHALL BE PROVIDED TO THE OWNER ELECTRONICALLY AS .DWG OR .DXF FILE FORMATS SINCE THEY HAVE BEEN APPROVED AND AS-BUILT DRAWINGS HAVE BEEN COMPLETED.
B. QUANTITIES OF ITEMS SUBMITTED SHALL BE REVIEWED BY THE ENGINEER AND OWNER. SUCH REVIEW SHALL NOT RELIEVE THE BAS MANUFACTURER OF FURNISHING QUANTITIES REQUIRED BASED UPON CONTRACT DOCUMENTS.
C. PROVIDE THE ENGINEER AND OWNER ANY ADDITIONAL INFORMATION OR DATA WHICH IS DEEMED NECESSARY TO DETERMINE COMPLIANCE WITH THE SPECIFICATIONS OR WHICH IS DEEMED VALUABLE IN DOCUMENTING AND UNDERSTANDING THE SYSTEM TO BE INSTALLED.
1.5 WARRANTY
A. WARRANTY ALL WORK AS FOLLOWS
1. BAS SYSTEM LABOR AND MATERIALS SHALL BE WARRANTED FREE FROM DEFECTS FOR A PERIOD OF TWELVE (12) MONTHS AFTER FINAL COMPLETION ACCEPTANCE BY THE OWNER. BAS FAILURES DURING THE WARRANTY PERIOD SHALL BE ADJUSTED, REPAIRED, OR REPLACED AT NO CHARGE TO THE OWNER. THE BAS MANUFACTURER SHALL RESPOND TO THE OWNER'S REQUEST FOR WARRANTY SERVICE WITHIN 24 HOURS OF THE INITIATED CALL AND WILL OCCUR DURING NORMAL BUSINESS HOURS (MAN-FRI).
2. AT THE END OF THE SHAKEDOWN PERIOD, ADJUST SETTINGS OF EQUIPMENT AND SYSTEMS ARE OPERATING SATISFACTORILY TO THE OWNER AND ENGINEER. THE OWNER SHALL SIGN CERTIFICATES CERTIFYING THAT THE BAS IS OPERATIONAL AND HAS BEEN TESTED AND ACCEPTED IN ACCORDANCE WITH THE TERMS OF THIS SPECIFICATION. THE DATE OF OWNER'S ACCEPTANCE SHALL BE THE START OF THE WARRANTY PERIOD.
3. OPERATION NORMALIZATION SOFTWARE, PROJECT SPECIFIC SOFTWARE, GRAPHICS, DATABASE, AND FIRMWARE UPDATES SHALL BE PROVIDED TO THE OWNER AT NO CHARGE DURING THE WARRANTY PERIOD. WRITTEN AUTHORIZATION BY THE OWNER MUST BE GRANTED PRIOR TO THE INSTALLATION OF THESE UPDATES.
4. THE BAS MANUFACTURER SHALL PROVIDE A WEB-ACCESSIBLE USERS NETWORK FOR THE PROPOSED SYSTEM AND GIVE THE OWNER FREE ACCESS TO QUESTIONNAIRE/E-FORUM, GRAPHICS LIBRARY, USER TIPS, UPGRADES, AND TRAINING SCHEDULES FOR A ONE YEAR PERIOD OF TIME COMMENCING WITH THE WARRANTY PERIOD.
1.6 TRAINING
A. PROVIDE MINIMUM OF (2) CLASSROOM TRAINING SESSIONS, AND (4) HOURS FOR EACH SESSION, THROUGHOUT THE CONTRACT PERIOD. THE TRAINING WILL BE PROVIDED FOR PERSONNEL DESIGNATED BY THE OWNER.
B. THE OWNER TRAINING SHALL ENABLE PERSONNEL TO PROPERLY OPERATE THE BAS BY BEING ABLE TO CREATE, MODIFY AND DELETE PROGRAMMING, ADD, REMOVE AND MODIFY PHYSICAL POINT & POR INDIVIDUAL CONTROLLERS AND ADD ADDITIONAL CONTROLLERS WHEN REQUIRED.
1.9 FIELD QUALITY CONTROL
A. ALL WORK, MATERIALS AND EQUIPMENT SHALL COMPLY WITH THE RULES AND REGULATIONS OF APPLICABLE LOCAL, STATE, AND FEDERAL CODES AND ORDINANCES AS IDENTIFIED IN CONTRACT DOCUMENTS.
B. BAS MANUFACTURER SHALL CONTINUALLY MONITOR THE FIELD INSTALLATION FOR BUILDING CODE COMPLIANCE AND QUALITY OF WORKMANSHIP. ALL VISIBLE PIPING AND OR WIRING RUNS (WILL BE INSTALLED PARALLEL TO BUILDING LINES AND PROPERLY SUPPORTED.
C. BAS INSTALLING CONTRACTOR(S) SHALL ARRANGE FOR FIELD INSPECTIONS BY LOCAL AND/OR STATE AUTHORITIES HAVING JURISDICTION OVER THE WORK.

100% OA UNIT (MORGANIZER)

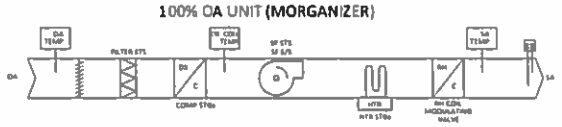

SEQUENCE OF OPERATION MODULATING VALVE HOT GAS REHEAT SYSTEM
DISCHARGE AIR CONFIGURATION

A. DISCHARGE AIR OCCUPIED CONTROL

CONTROL OF THE TRANE HOT GAS REHEAT DX ROOFTOP UNIT IS ACCOMPLISHED THROUGH A DEDICATED STANDALONE CONTROL MODULE (UC480). THIS CONTROLLER UTILIZES FOUR TEMPERATURE SENSORS. THE FUNCTION OF THIS CONTROLLER IS TO MAINTAIN A PROGRAMMED DISCHARGE AIR TEMPERATURE.

A TEMPERATURE SENSOR IS MOUNTED AFTER THE DX EVAPORATOR COIL. THIS TEMPERATURE SENSOR WILL BE USED BY THE CONTROLLER TO CONTROL THE COMPRESSORS TO CYCLE ON THE STAGE ONE COMPRESSOR ABOVE A 44 DEGREE DRY BULB TEMPERATURE SETPOINT IN THE COOLING MODE. THE SECOND STAGE COMPRESSOR WILL BE CYCLED ON ABOVE 56 DEGREES DRY BULB AND OFF ONCE THE TEMPERATURE FALLS BELOW 48 DEGREES.

A TEMPERATURE SENSOR IS FIELD MOUNTED IN THE DUCT AFTER THE HOT GAS REHEAT COIL AT LEAST 15 FEET DOWN FROM THE DISCHARGE OF THE UNIT. ONCE DISCHARGE TEMPERATURE SETPOINT 74 (ADJUSTABLE) IS REACHED AN ANALOG SIGNAL IS SENT TO THE HOT GAS REHEAT AND CONDENSER MODULATING VALVES TO MODULATE FREE CONDENSER HEAT INTO THE AIRSTREAM TO MAINTAIN THE DISCHARGE TEMPERATURE SETPOINT.

A SUCTION LINE TEMPERATURE WILL BE LOCATED ON THE SUCTION LINE OF CIRCUIT #1. THIS TEMPERATURE SENSOR WILL DISABLE BOTH COOLING CIRCUITS WHEN THE TEMPERATURE GOES BELOW 25 DEGREES (ADJUSTABLE) AND ENABLE THEM ABOVE 35 (ADJUSTABLE)

AN OUTSIDE AIR TEMPERATURE SENSOR IS MOUNTED IN THE OUTSIDE AIR INTAKE SECTION AND MONITORS THE OUTDOOR AIR INTAKE TEMPERATURE. THE CONTROLLER IS PROGRAMMED TO LOCK THE UNIT COOLING OUT IF THE OUTSIDE AIR INTAKE IS 65 DEGREES (ADJUSTABLE). THE COOLING WILL BE REENABLED AFTER THE OUTSIDE AIR TEMPERATURE RISES ABOVE 70 DEGREES (ADJUSTABLE).

THE HEAT WILL BE ENABLED WHEN THE OUTSIDE AIR INTAKE TEMPERATURE IS BELOW 65 DEGREES (ADJUSTABLE) WHEN HEATING IS CALLED FOR. THE CONTROLLER WILL DO BOTH HEATING MODE AND THE HEAT WILL BE CONTROLLED AS REQUIRED TO MAINTAIN THE DISCHARGE AIR HEATING SETPOINT (ADJUSTABLE).
THE ACTUAL OUTPUT SIGNAL FOR THE HEAT CONTROL WILL OPERATE BASED ON THE TYPE OF HEAT THE UNIT HAS.

IF THE UNIT HAS ELECTRIC HEAT THEN THE FOLLOWING WILL OCCUR
THE 1ST STAGE WILL COME ON WHEN THE DISCHARGE AIR TEMPERATURE IS BELOW THE HEAT SETPOINT (ADJUSTABLE) AND OFF ABOVE THE HEAT SETPOINT PLUS A DEADBAND (ADJUSTABLE). THE 2ND STAGE WILL BE ON BELOW THE HEAT SETPOINT (ADJUSTABLE) MINUS 2 DEGREES AND OFF ABOVE THE HEAT SETPOINT MINUS 2 DEGREES PLUS A DEADBAND (ADJUSTABLE)

THE CONTROLLER IS PROGRAMMED TO MAINTAIN DISCHARGE AIR SETPOINT FOR HEATING AND COOLING. THE CONTROLLER HAS ALL OF THESE FUNCTIONS PRE-PROGRAMMED, HOWEVER, SINCE IT IS FULLY PROGRAMMABLE, THE SETPOINTS AND SEQUENCE CAN BE MODIFIED IF REQUIRED.

B. FAN PROVING DEVICE

A CONTACT CLOSURE INTO THE CONTROLLER WILL INDICATE TO THE CONTROLLER PROOF OF AIRFLOW FROM A DIFFERENTIAL PRESSURE SWITCH THAT WILL ALLOW EITHER COOLING OR HEATING TO OPERATE.

C. OCCUPIED/UNOCCUPIED CONTROL

A CONTACT CLOSURE INTO THE CONTROLLER WILL INDICATE AN OCCUPIED MODE OF OPERATION. THE CONTROLLER WILL OPERATE IN THE UNOCCUPIED MODE WHILE THE CONTACTS ARE OPEN. THE DRY CONTACT INPUT WILL BE WIRED FROM EITHER A TIME CLOCK OR THE BUILDING ENERGY MANAGEMENT SYSTEM. THE SYSTEM CAN ALSO BE SCHEDULED LOCALLY IF EQUIPPED WITH A DISPLAY CONTROLLER BY A TRANE BUILDING AUTOMATION SYSTEM OR BY A COMMAND FROM A BACNET NETWORK DEPENDING ON CONTROLLER TYPE.

D. UNOCCUPIED MODE

WHEN THE CONTROLLER IS INDEXED TO THE UNOCCUPIED MODE, THE SYSTEM WILL BE OFF.

MECHANICAL CONTROLS

RGD
CONSULTING ENGINEERS
MECHANICAL | ELECTRICAL | PLUMBING | FIRE PROTECTION | SUSTAINABLE
www.rgdengineers.com
MAKE IT THE MOST
1217 PRESIDENTS RD SUITE 101, SUFFER, LA 70816 (225) 761-0015

These Drawings are NOT VALID for any purpose which requires the original signature and seal of the engineer unless the original signature and seal are affixed. Drawings not signed and sealed by the engineer shall not be submitted to any authority or used for any purpose where signed and sealed documents are required.

MICHAEL J. BISHOP
FL CREDA P.E. NO. 73098
MECHANICAL ENGINEER
CERT. OF AUTH. 5464
DATE 9.19.2014

HARVARD•JOLLY
ARCHITECTURE
Ft. Lauderdale 954-489-7910
Ft. Myers 239-275-7774
Jacksonville 904-356-3300
Orlando 407-422-7277
Punta Gorda 941-575-4403
St. Petersburg 727-896-4611
Tampa 813-286-8205
West Palm Beach 561-478-4457
AA0000119
www.HarvardJolly.com
WEST PALM BEACH, FL

NEW CLASSROOM BUILDING
RIVIERA BEACH MARITIME ACADEMY
RIVIERA BEACH, FLORIDA
CONTRUCTION DOCUEMENTS

Comm. No: 214031.00
Date: 09-24-14
Drawn: RGD
Revised:

copyright 2014

MECHANICAL CONTROLS

M6.1

GENERAL PLUMBING NOTES

1. ALL WORKMANSHIP AND MATERIALS SHALL BE IN STRICT ACCORDANCE WITH APPLICABLE CODES AS SHOWN.
2. THE PLUMBING CONTRACTOR SHALL BE HELD TO HAVE VERIFIED ALL EXISTING CONDITIONS, INCLUDING SITE VISITATION, AND REVIEW OF AS BUILT DOCUMENTATION AS APPLICABLE PRIOR TO BIDDING, ORDERING FABRICATION OR INSTALLATION OF ANY MATERIALS OR EQUIPMENT ON THIS PROJECT.
3. UNLESS OTHERWISE SPECIFIED ALL MATERIALS SHALL BE NEW. ALL WORK SHALL BE PERFORMED BY A LICENSED PLUMBING CONTRACTOR IN A FIRST CLASS WORKMANLIKE MANNER. THE COMPLETED SYSTEM SHALL BE FULLY OPERATIVE. ALL EXCAVATION AND BACK FILL AS REQUIRED FOR THIS PHASE OF CONSTRUCTION SHALL BE A PART OF THIS CONTRACT.
4. REQUIRED INSURANCE SHALL BE PROVIDED BY THE PLUMBING CONTRACTOR FOR PROTECTION AGAINST PUBLIC LIABILITY AND PROPERTY DAMAGE FOR THE DURATION OF THE WORK.
5. PLUMBING CONTRACTOR SHALL SECURE AND PAY FOR ALL PERMITS, FEES, INSPECTION AND TESTS. PLUMBING CONTRACTOR TO OBTAIN PERMIT AND APPROVED SUBMITTALS PRIOR TO BEGINNING WORK OR ORDERING EQUIPMENT. PLUMBING CONTRACTOR MUST BE PRESENT FOR ALL INSPECTIONS OF HIS WORK BY REGULATORY AUTHORITIES.
6. DRAWINGS ARE DIAGRAMMATIC IN NATURE AND ARE TO BE READ IN CONJUNCTION WITH ARCHITECTURAL MECHANICAL, ELECTRICAL AND STRUCTURAL DRAWINGS AND ARE CONSIDERED TO BE ONE SET OF DOCUMENTS. BENDS OFFSETS AND TRANSITIONS WILL BE REQUIRED TO PROVIDE AND INSTALL A COMPLETE AND FUNCTIONAL SYSTEM AND SHALL BE PROVIDED BY THE PLUMBING CONTRACTOR AT NO ADDITIONAL COST. DO NOT SCALE FOR THE EXACT LOCATION OF FIXTURES, PIPING, EQUIPMENT ETC.
7. CONTRACTOR SHALL SUBMIT FOR APPROVAL FIVE (5) COPIES OF MANUFACTURER'S DRAWINGS FOR EACH PIECE OF EQUIPMENT AND PLUMBING FIXTURES INCLUDED IN CONTRACT. ALL MATERIAL SHALL BE NEW OF U.S. MANUFACTURER OF GOOD QUALITY. ALL WORK SHALL BE PERFORMED IN A WORKMANLIKE MANNER BY SKILLED TRADESMEN.
8. THE GENERAL CONTRACTOR AND ALL OTHER CONTRACTORS SHALL BE LICENSED IN THE STATE OF FLORIDA. GENERAL CONTRACTOR SHALL CONSIDER THE PROJECT AS ONE SET OF DOCUMENTS. GENERAL CONTRACTOR SHALL PROVIDE AN ENTIRE SET OF DOCUMENTS SHOWING ALL TRADES TO EACH SUBCONTRACTOR PRIOR TO BIDDING AND CONSTRUCTION. GENERAL CONTRACTOR SHALL COORDINATE WITH ALL OTHER CONTRACTORS TO INFORM ARCHITECT/ENGINEER OF ANY DISCREPANCIES OR CONFLICTS ON THE DOCUMENTS PRIOR TO SUBMITTING FINAL BID AND COMMENCING ANY WORK. CONTRACTOR SHALL MAKE HIMSELF AVAILABLE FOR REVIEWING DOCUMENTS WITH ARCHITECT/ENGINEER UPON REQUEST.
9. THE GENERAL CONTRACTOR SHALL PROVIDE IN WRITING ON COMPANY LETTER HEAD ALL ITEMS VALUE ENGINEERED OR OMITTED FROM ENTIRE PROJECT. THIS DOCUMENT SHALL HAVE DETAILED DESCRIPTION AND TRANSPARENCY OF ALL ITEMS IN EACH DISCIPLINE AND TRADE. INFORMATION SHALL BE PROVIDED TO ARCHITECT AND ENGINEER FOR REVIEW PRIOR TO SUBMITTING FINAL BID. CONTRACTOR SHALL MAKE HIMSELF AVAILABLE FOR REVIEWING DOCUMENTS WITH ARCHITECT ENGINEER/OWNER UPON REQUEST.
10. ALL WORK SHALL BE COORDINATED WITH OTHER TRADES TO AVOID INTERFERENCE WITH THE PROGRESS OF CONSTRUCTION. REPORT ANY DISCREPANCY TO ENGINEER/ARCHITECT PRIOR TO BEGINNING CONSTRUCTION.
11. VERIFY LOCATION, SIZE, DIRECTION OF FLOW AND INVERTS OF ALL EXISTING UTILITIES PRIOR TO BEGINNING OF CONSTRUCTION. ADVISE ENGINEER OF ANY DISCREPANCIES.
12. THE INVERT ELEVATIONS OF DRAINAGE PIPING LEAVING THE BUILDING ARE APPROXIMATE AND MAY VARY DEPENDING ON FIELD CONDITIONS. THE CONTRACTOR IS RESPONSIBLE FOR COORDINATING CIVIL AS REQUIRED TO ASSURE THAT A CONNECTION TO THE SANITARY SEWER SYSTEM CAN BE COMPLETED. THE CONTRACTOR SHALL REPORT ANY DISCREPANCIES TO THE ENGINEER IN WRITING PRIOR TO COMMENCEMENT OF THE GROUND ROUGH.
13. WATER DISTRIBUTION PIPING SHALL BE TYPE "L" COPPER.
14. ALL PVC SHALL BE SOLID CORE NO CELLULAR CORE.
15. UNLESS OTHERWISE INDICATED ON THE PLAN, THE SOIL, WASTE, AND VENT PIPING SHALL BE PVC. PVC MAY NOT BE USED THROUGH RATED ASSEMBLIES OR IN RETURN AIR PLENUMS.
16. ALL FIXTURES MUST BE PROVIDED WITH READILY ACCESSIBLE STOPS AND APPROPRIATELY MARKED ACCESS PANELS. ISOLATION VALVES LOCATED IN CEILING CAVITIES ABOVE HARD CEILINGS SHALL BE SUPPLIED WITH APPROVED ACCESS PANELS. COORDINATE LOCATIONS WITH GENERAL CONTRACTOR PRIOR TO INSTALLATION.
17. FURNISH AND INSTALL APPROVED, ENGINEERED PISTON TYPE MECHANICAL WATER HAMMER ARRESTORS AT EACH PLUMBING FIXTURE OR FIXTURE GROUP WITH QUICK CLOSING VALVES. INSTALLATION OF THE ARRESTOR SHALL BE IN ACCORDANCE WITH THE MANUFACTURER'S WRITTEN INSTRUCTIONS, AND SHALL BE IN COMPLIANCE WITH PDI-WH 201 AND ASSE 1010. THE ARRESTOR SHALL BE LOCATED WITHIN THE EFFECTIVE RANGE OF THE QUICK CLOSING VALVE, WITH ACCESS UNLESS THE ARRESTOR IS DESIGNED FOR CONCEALED APPLICATION AND IS APPROVED BY THE BUILDING DEPARTMENT. PRECISION PLUMBING PRODUCTS, JOSAM OR SIOUX CHIEF ARE ACCEPTABLE SUPPLIERS.
18. DIELECTRIC COUPLINGS ARE REQUIRED BETWEEN ALL DISSIMILAR METAL IN PIPING AND EQUIPMENT CONNECTIONS.
19. ISOLATE COPPER PIPE FROM HANGER OR SUPPORTS WITH ISOLATOR PAD.
20. ALL FIRE RATED FLOOR AND WALL PENETRATIONS SHALL BE PROPERLY PROTECTED FROM FIRE, SMOKE AND WATER PENETRATION BY FILLING VOIDS BETWEEN PIPE AND WALL/FLOOR SLEEVES WITH FIRE RATED FOAM TO ACHIEVE THE SAME RATING AS WALLS OR FLOORS AS PART OF THE PLUMBER'S WORK.
21. PLUMBING CONTRACTOR SHALL GUARANTEE ALL MATERIALS AND WORKMANSHIP FREE FROM DEFECTS FOR A PERIOD OF NOT LESS THAN ONE (1) YEAR FROM DATE OF ACCEPTANCE BY OWNER. CORRECTION OF ANY DEFECTS SHALL BE COMPLETED WITHOUT ADDITIONAL CHARGE AND SHALL INCLUDE REPLACEMENT OR REPAIR OF ANY OTHER PHASE OF THE INSTALLATION WHICH MAY HAVE BEEN DAMAGED.
22. PROVIDE ACCESS PANELS FOR ALL CONCEALED VALVES AND ALL WATER HAMMER ARRESTERS. ACCESS PANELS IN RATED WALLS MUST MAINTAIN THE SAME RATING AND MUST MATCH THE FINISH OF THE WALL IN WHICH IT IS INSTALLED.
23. PROVIDE CHROME PLATED COMBINATION COVER PLATE AND CLEAN OUT PLUG OR ACCESS PANEL FOR ALL WALL CLEAN OUTS.
24. NO COMBUSTIBLE MATERIAL TO BE USED IN MECHANICAL ROOMS OR IN CEILING SPACES WHERE USED AS RETURN AIR PLENUMS.
25. NO WATER, SANITARY OR DRAINAGE PIPING PERMITTED IN ELECTRICAL OR ELEVATOR EQUIPMENT ROOMS.
26. ALL CONTROL VALVES SHALL BE TAGGED AND MARKED. A REPRODUCIBLE DIAGRAM LOCATING ALL VALVES SHALL BE PROVIDED FOR OWNER/OPERATOR.
27. PROVIDE ANGLE STOPS ON ALL WATER SERVICE LINES TO FIXTURES FOR INDIVIDUAL SHUT-OFF.
28. WATER PIPING INSULATION SHALL BE 1/2" THICK ARMAFLEX INSTALLED IN ACCORDANCE WITH MANUFACTURER'S INSTRUCTIONS FOR ALL HOT WATER PIPING UP TO 1-1/4"Ø. HOT WATER PIPING 1-1/2"Ø OR LARGER SHALL HAVE 1" THICK ARMAFLEX. WHERE DOMESTIC WATER TEMPERATURES CAN CAUSE SWEATING ALL COLD WATER PIPING SHALL BE INSULATED WITH 1/2" THICK ARMAFLEX INSULATION. ALL INSULATION SHALL BE PLENUM RATED.
29. STUDOR MINI/MAXI AIR ADMITTANCE VALVES OR AN APPROVED EQUAL MAY BE USED AS AN ALTERNATE TO VENT PIPING THROUGH ROOF WHERE ACCEPTABLE BY THE PLUMBING OFFICIAL. THE INSTALLATION SHALL BE IN ACCORDANCE WITH SECTION 917 OF THE FLORIDA BUILDING CODE-PLUMBING AND THE MANUFACTURER'S WRITTEN INSTRUCTIONS. AIR ADMITTANCE VALVES MAY NOT BE USED IN A RETURN AIR PLENUM.
30. ALL FLOOR DRAINS NOT OTHERWISE PRIMED WITH INDIRECT WASTE SHALL BE PRIMED FROM THE NEAREST DOMESTIC WATER FIXTURE. REF. FLOOR DRAIN PRIMING DETAIL.
31. PLUMBING CONTRACTOR SHALL PROVIDE ENGINEER WITH AS-BUILT DRAWINGS UPON COMPLETION.
32. ALL PUBLIC HAND-WASHING SINKS SHALL RECEIVE TEMPERED WATER THROUGH AN APPROVED TEMPERATURE LIMITING DEVICE THAT CONFORMS WITH ASSE 1070.
33. TEMPERATURE-ACTUATED MIXING VALVES WHICH ARE INSTALLED TO REDUCE WATER TEMPERATURES TO DEFINED LIMITS, SHALL COMPLY WITH ASSE 1017.

PLUMBING SYMBOL LEGEND

Symbol	Description
SAN	SANITARY PIPE
VNT	SANITARY VENT
CW	DOMESTIC COLD WATER LINE
HW	DOMESTIC HOT WATER LINE
	DOMESTIC WATER DOWN
	DOMESTIC WATER UP
	BALL VALVE
	CONNECT TO EXISTING AT THIS LOCATION
	POINT OF DEMO
	HOSE BIBB / WALL HYDRANT

NOTE: NOT ALL SYMBOLS MAY APPLY TO PLANS

PLUMBING ABBREVIATIONS

AAV	AIR ADMITTANCE VALVE	HW	HOT WATER
ACW	AUTOMATIC CLOTHES WASHER	HWR	HOT WATER RECIRC.
AFF	ABOVE FINISHED FLOOR	IE	INVERT ELEVATION
CI	CAST IRON	LAV	LAVATORY
CO	CLEANOUT	NTS	NOT TO SCALE
COND	CONDENSATE	OD	OVERFLOW DRAIN
CTG	CLEANOUT TO GRADE	RD	ROOF DRAIN
CW	COLD WATER	RE	RELOCATE EXISTING
EFD	EMERGENCY FLOOR DRAIN	REF	REFERENCE
EWC	ELECTRICAL WATER COOLER	RO	REVERSE OSMOSIS
EWH	ELECTRIC WATER HEATER	SK	SINK
EX	EXISTING	SH	SHOWER
FCO	FLOOR CLEAN OUT	SST	STAINLESS STEEL
FD	FLOOR DRAIN	TUB/SH	BATH TUB W/ SHOWER HEAD
FF	FINISHED FLOOR	UR	URINAL
GWH	GAS WATER HEATER	VTR	VENT TO ROOF
HB	HOSE BIBB	WC	WATER CLOSET
HC	HANDICAP	WCO	WALL CLEANOUT

NOTE: NOT ALL ABBREVIATIONS MAY APPLY TO PLANS

SHOP DRAWINGS

1. PRIOR TO COMMENCING ANY WORK, FABRICATING PIPING, OR ORDERING EQUIPMENT THE PLUMBING CONTRACTOR SHALL PRODUCE AND PROVIDE TO THE ARCHITECT AND ENGINEER A FULLY COORDINATED SET OF SHOP DRAWINGS FOR ALL PLUMBING WORK. THESE PLANS SHALL BE COORDINATED WITH THE GENERAL CONTRACTOR AND SHALL INCLUDE FIELD VERIFIED STRUCTURAL INFORMATION AND COORDINATION WITH ALL OTHER ENGINEERING AND ARCHITECTURAL TRADES AND CONTRACTORS.
2. PLUMBING CONTRACTOR SHALL PROVIDE SHOP DRAWINGS IN AUTOCAD 2009 FORMAT WITH A DATED CONTRACTOR OF RECORD TITLE BLOCK/SEAL. PLANS SHALL SHOW PIPE ROUTING, PIPE SIZES, OFFSETS, ELBOWS, TRANSITIONS, RISERS, CONNECTIONS, ACCESS AREAS, MOUNTING/INSTALLATION METHODS AND SUPPORTS, ETC.

SITE / CIVIL NOTE:

1. ALL STORM DRAIN CONNECTIONS ARE SHOWN ON THE SITE / CIVIL DRAWINGS. ALL LOCATIONS OF NEW & EXISTING PIPE ARE APPROXIMATE, COORDINATE UNDER GROUND UTILITIES WITH CIVIL'S DRAWINGS AND UTILITY COMPANY.
2. THE INVERT ELEVATIONS OF DRAINAGE PIPING LEAVING THE BUILDING ARE APPROXIMATE AND MAY VARY DEPENDING ON FIELD CONDITIONS. THE CONTRACTOR IS RESPONSIBLE FOR COORDINATION WITH CIVIL AS REQUIRED TO ASSURE THAT A CONNECTION TO THE SANITARY SEWER SYSTEM CAN BE COMPLETED. THE CONTRACTOR SHALL REPORT ANY DISCREPANCIES TO THE ENGINEER IN WRITING PRIOR TO COMMENCEMENT OF THE GROUND ROUGH.

PLUMBING SHEET INDEX

P0.1	PLUMBING NOTES & LEGENDS
P1.1	OVERALL SANITARY FLOOR PLANS
P1.2	ENLARGED SANITARY FLOOR PLANS
P1.3	SANITARY ROOF PLAN
P2.1	OVERALL DOMESTIC WATER FLOOR PLANS
P2.2	ENLARGED DOMESTIC WATER FLOOR PLANS
P2.3	DOMESTIC WATER ROOF PLAN
P3.1	SANITARY ISOMETRIC PLAN
P4.1	DOMESTIC WATER ISOMETRIC PLAN - 1ST FLOOR
P4.2	DOMESTIC WATER ISOMETRIC PLAN - 2ND FLOOR
P5.1	PLUMBING DETAILS
P6.1	PLUMBING SCHEDULES

APPLICABLE BUILDING CODES

- FLORIDA BUILDING CODE, 2010 EDITION
- FLORIDA BUILDING CODE PLUMBING, 2010 EDITION
- NFPA 1, FLORIDA 2009 EDITION
- NFPA 101, FLORIDA 2009 EDITION

MATERIALS AND WORKMANSHIP SHALL COMPLY WITH ALL APPLICABLE CODES AND ORDINANCES IN THEIR LATEST REVISIONS.

CONTRACTOR SHALL COORDINATE SPECIFIC REQUIREMENTS OF EQUIPMENT WITH MANUFACTURER SHOP DRAWINGS.

ALL EQUIPMENT SHALL BE INSTALLED STRICTLY IN ACCORDANCE WITH THE MANUFACTURERS WRITTEN INSTALLATION INSTRUCTIONS.

CEILING CAVITY IS A RETURN AIR PLENUM. NO PVC OR COMBUSTIBLE MATERIALS ALLOWED PER FBC-M 602.2.1

Call 48 hours before you dig

It's the Law!

1-800-432-4770

Sunshine State One Call of Florida, Inc.

RGD CONSULTING ENGINEERS

MICHAEL J. BISHOP
FLORIDA P.E. NO. 73000
MECHANICAL ENGINEER
CERT OF AUTH 5434
DATE 9.18.2014

HARVARD•JOLLY ARCHITECTURE

Ft. Lauderdale 954-486-7910
Ft. Myers 239-275-7774
Jacksonville 904-396-3300
Orlando 407-667-7727
Punta Gorda 941-575-0403
St. Petersburg 727-896-4611
Tampa 813-286-8206
West Palm Beach 561-478-4457
AAC000119
www.HarvardJolly.com
WEST PALM BEACH, FL

NEW CLASSROOM BUILDING
RIVIERA BEACH MARITIME ACADEMY
RIVIERA BEACH, FLORIDA
CONTRUCTION DOCUEMENTS

Comm. No: 214031.00
Date: 09-24-14
Drawn: RGD
Revised:

copyright 2014

P0.1

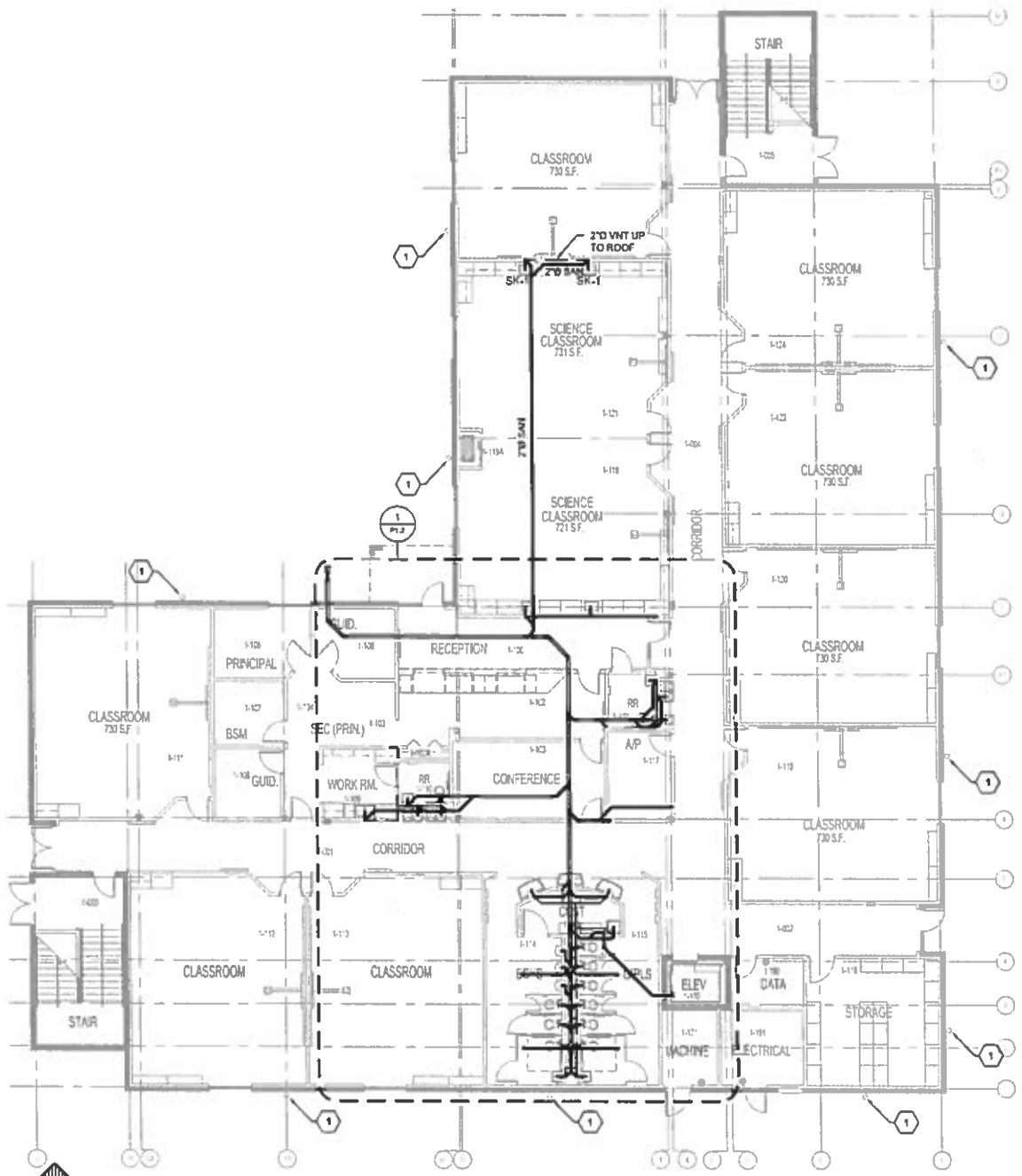

1 OVERALL SANITARY FLOOR PLAN - 1ST FLOOR

SCALE: 3/32" = 1'-0"

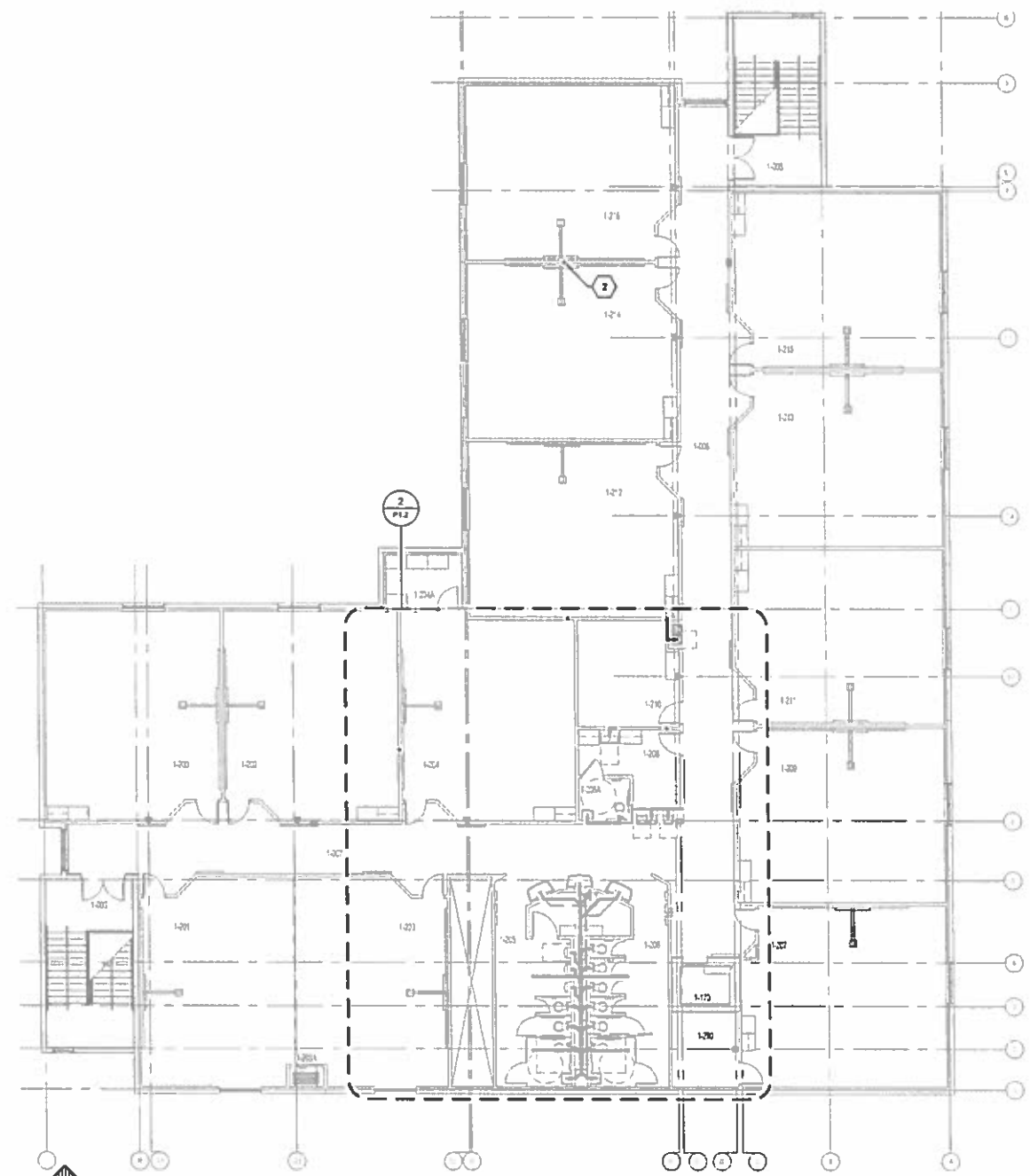

2 OVERALL SANITARY FLOOR PLAN - 2ND FLOOR

SCALE: 3/32" = 1'-0"

SANITARY KEY NOTES:

1. PROVIDE 6"Ø STORM WATER DRAIN AT GRADE TO DRAIN DISCHARGE FROM STORM WATER LEADER AND ROUTE DRAIN 5' FROM EXTERIOR OF BUILDING TO DRAIN TO STORM SEWER. REFERENCE CIVIL SITE PLAN.
2. 2"Ø VENT LINE FROM FIRST FLOOR UP TO ROOF. VENT LINES SHALL BE ROUTED ENTIRELY WITHIN WALL CAVITY AND SHALL NOT ROUTE THROUGH RETURN AIR PLENUMS.

RGD
CONSULTING ENGINEERS

MICHAEL J. BISHOP
FLORIDA P.E. NO. 73000
MECHANICAL ENGINEER
CERT OF AUTH 5454
DATE 9.19.2014

HARVARD•JOLLY
ARCHITECTURE

FL Lauderdale 954-486-7910
FL Myers 239-275-7774
Jacksonville 904-396-3300
Orlando 407-687-7727
Punta Gorda 941-575-0403
St. Petersburg 727-896-4611
Tampa 813-286-8208
West Palm Beach 561-478-4457
AAC000119
www.HarvardJolly.com
WEST PALM BEACH, FL.

NEW CLASSROOM BUILDING
RIVIERA BEACH MARITIME ACADEMY
RIVIERA BEACH, FLORIDA
CONTRUCTION DOCUEMENTS

Contr. No:	214031.00
Date:	09-24-14
Drawn:	RGD
Revised:	

copyright 2014

P1.1

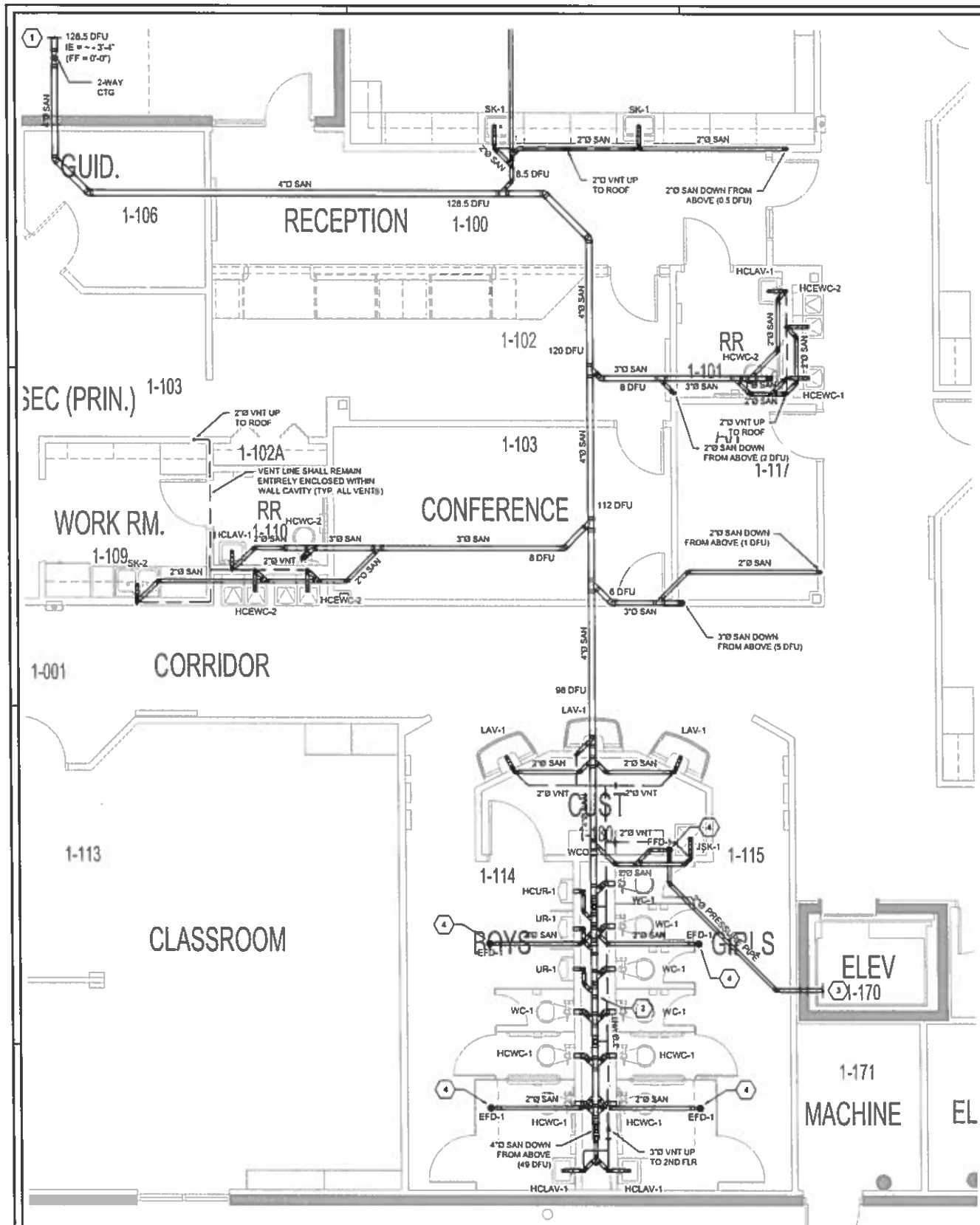

1 ENLARGED SANITARY FLOOR PLAN - 1ST FLOOR

SCALE: 1/4" = 1'-0"

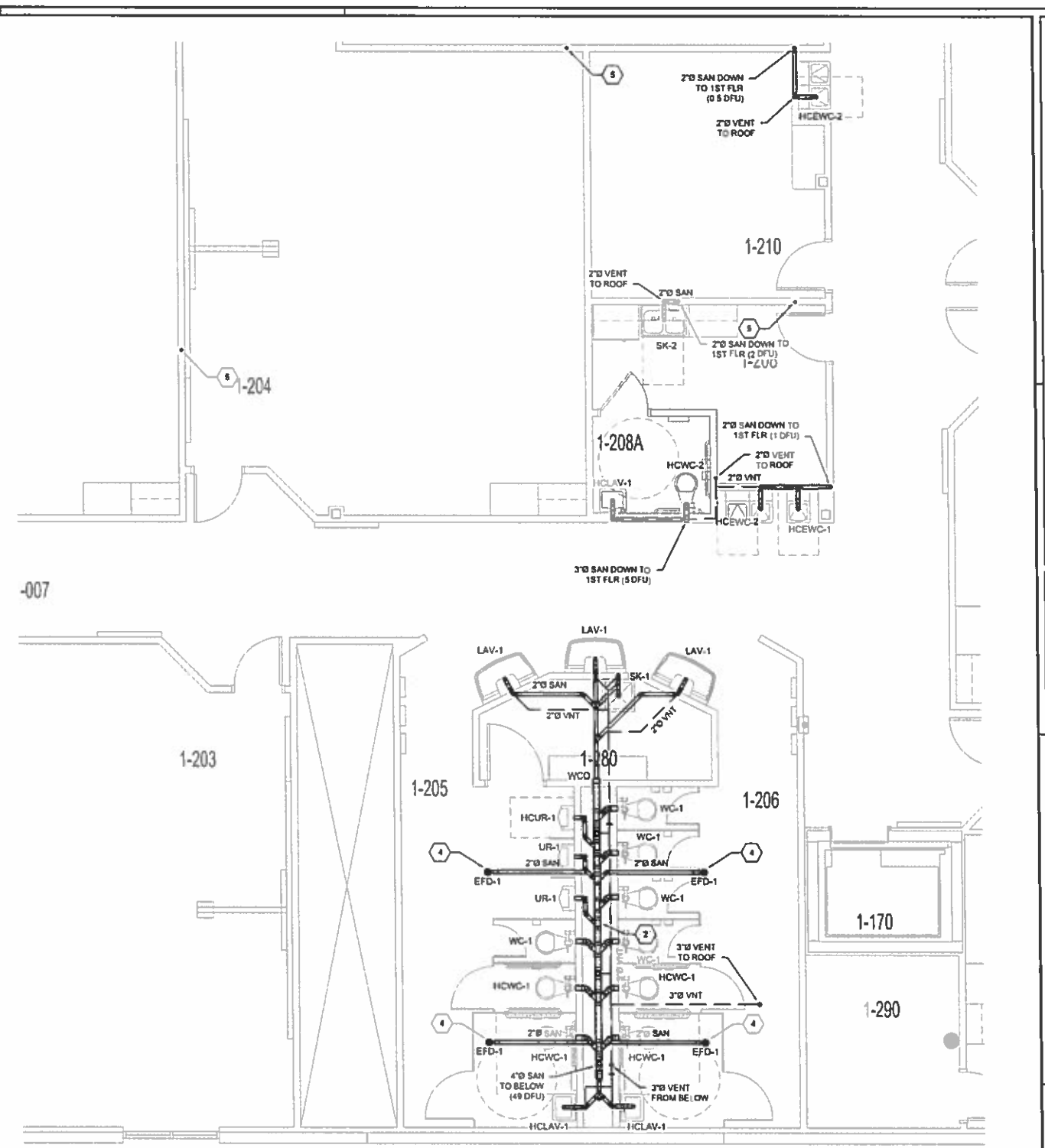

2 ENLARGED SANITARY FLOOR PLAN - 2ND FLOOR

SCALE: 1/4" = 1'-0"

SANITARY KEY NOTES:

1. BUILDING DRAIN TO BUILDING SEWER. REFERENCE CIVIL SITE PLAN.
2. 4"Ø SANITARY DRAIN RECEIVING DISCHARGE FROM WALL-MOUNTED WATER CLOSETS AND URINALS IS LOCATED IN WALL CAVITY ABOVE FLOOR SLAB. REFERENCE ISOMETRIC PLAN.
3. 2"Ø PRESSURE PIPE FROM ELEVATOR SUMP PUMP. REFERENCE ELEVATOR SUMP PUMP DETAIL FOR INSTALLATION.
4. PRIME TRAP OF FLOOR DRAIN FROM NEAREST SINK OR COLD WATER SUPPLY LINE.
5. 2"Ø VENT LINE FROM FIRST FLOOR UP TO ROOF. VENT LINES SHALL BE ROUTED ENTIRELY WITHIN WALL CAVITY AND SHALL NOT ROUTE THROUGH RETURN AIR PLENUMS.

RGD
CONSULTING ENGINEERS

MICHAEL J. BISHOP
FLORIDA P.E. NO. 73000
MECHANICAL ENGINEER
CERT. OF AUTH. 5434
DATE 9.19.2014

HARVARD•JOLLY
ARCHITECTURE

Ft. Lauderdale 954-486-7910
Ft. Myers 239-337-3174
Jacksonville 904-366-3300
Orlando 407-647-7727
Punta Gorda 941-575-0403
St. Petersburg 727-866-4411
Tampa 813-282-9000
West Palm Beach 561-478-4457
AAC000119
www.harvardjolly.com
1630 PALM BEACH, FL.

NEW CLASSROOM BUILDING
RIVIERA BEACH MARITIME ACADEMY
RIVIERA BEACH, FLORIDA
CONTRUCTION DOCUEMENTS

Contr. No:	214031.00
Date:	09-24-14
Drawn:	RGD
Revised:	

copyright 2014

P1.2

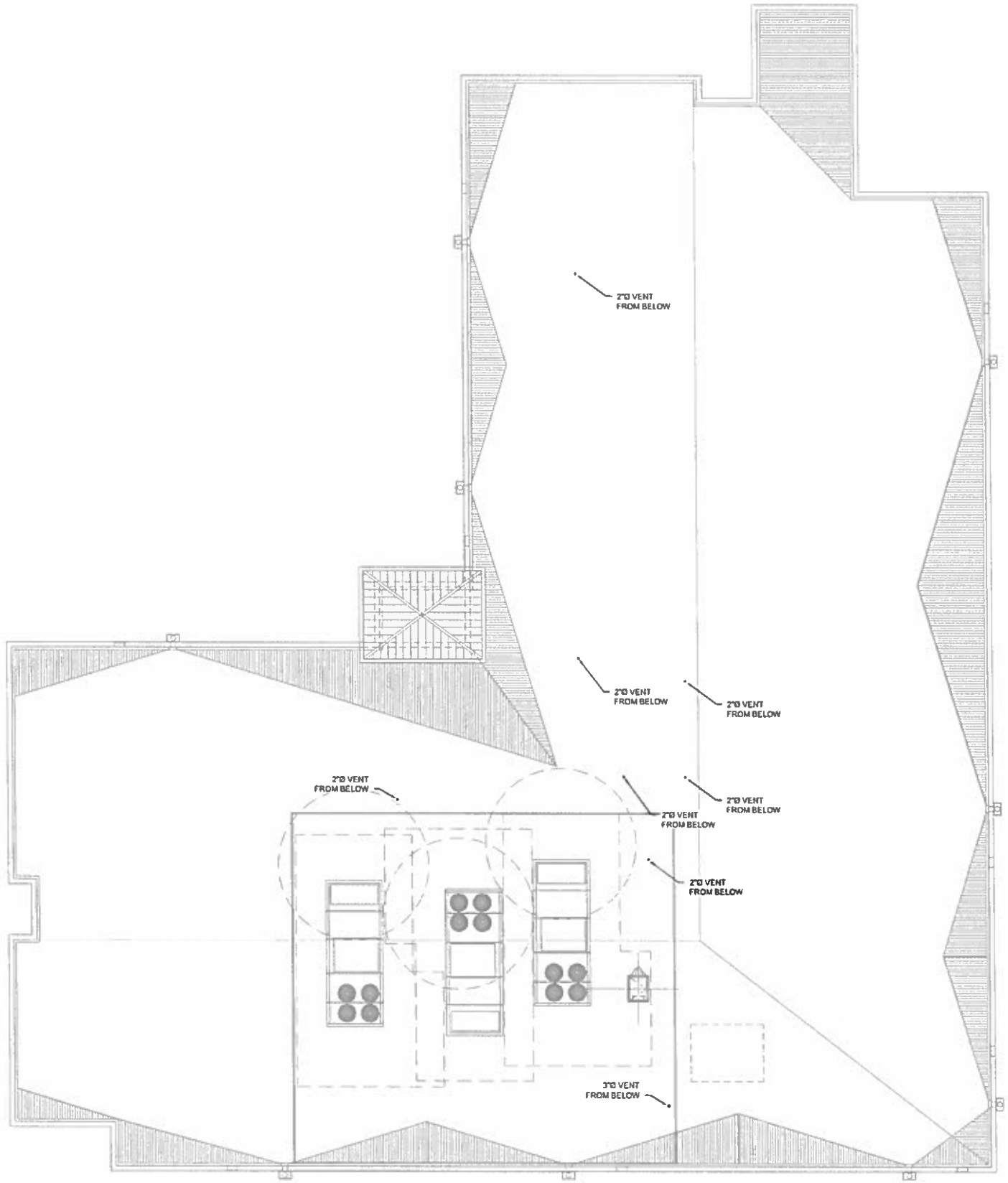

1 SANITARY ROOF PLAN

SCALE: 1/8" = 1'-0"

RGD
CONSULTING ENGINEERS

MICHAEL J. BISHOP
FLORIDA P.E. NO. 73000
MECHANICAL ENGINEER
CERT. OF AUTH. 8434
DATE 9.19.2014

HARVARD•JOLLY
ARCHITECTURE

Ft. Lauderdale 954-486-7910
Ft. Myers 239-275-7774
Jacksonville 904-396-3300
Orlando 407-667-7727
Punta Gorda 941-575-0403
St. Petersburg 727-896-4811
Tampa 813-286-8208
West Palm Beach 561-478-4457
AAC000119
www.HarvardJolly.com
WEST PALM BEACH, FL.

NEW CLASSROOM BUILDING
RIVIERA BEACH MARITIME ACADEMY
RIVIERA BEACH, FLORIDA
CONTRUCTION DOCUEMENTS

Comm. No:	214031.00
Date:	09-24-14
Drawn:	RGD
Revised:	

copyright 2014

P1.3

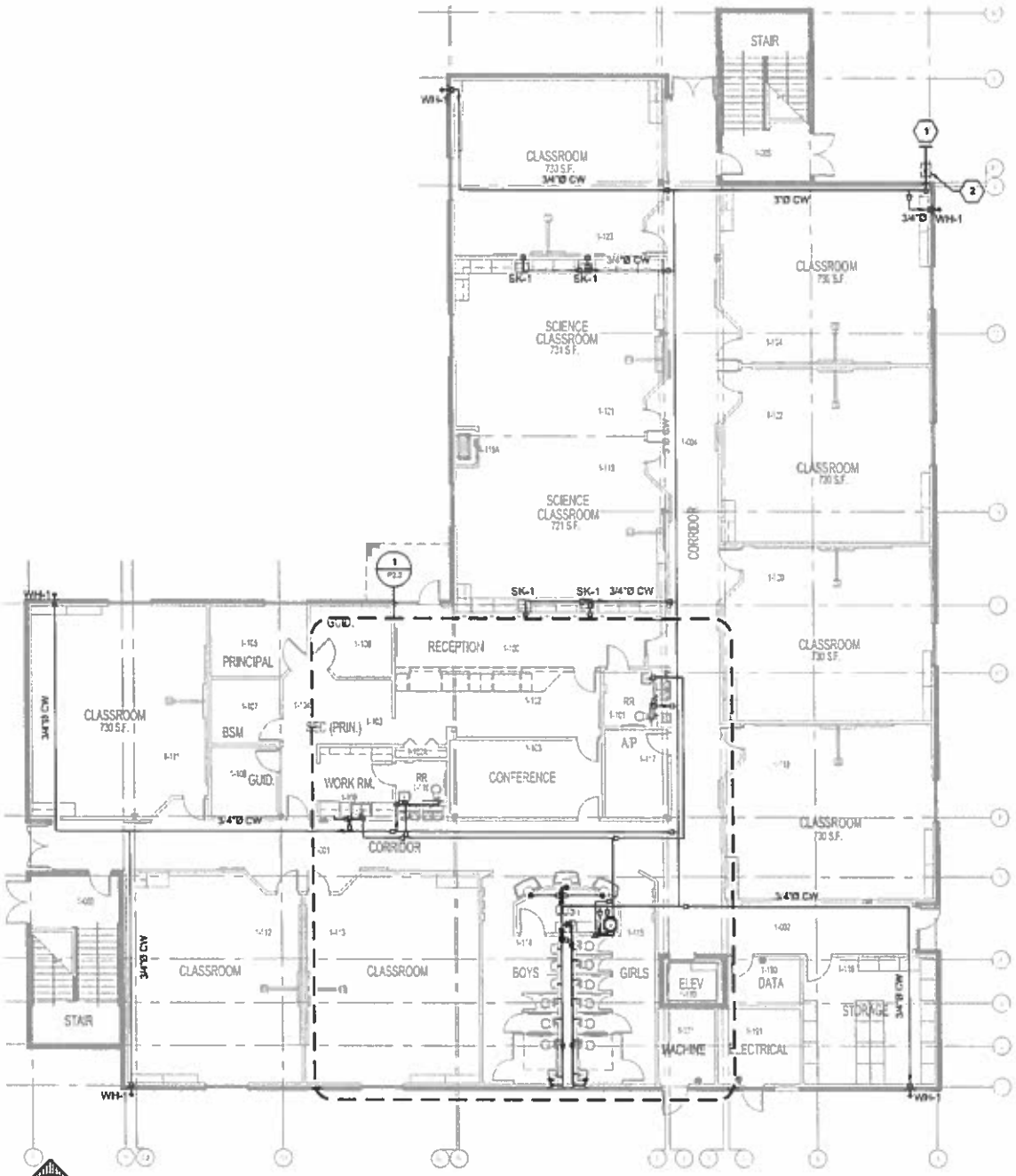

1 OVERALL DOMESTIC WATER FLOOR PLAN - 1ST FLOOR

SCALE: 3/32" = 1'-0"

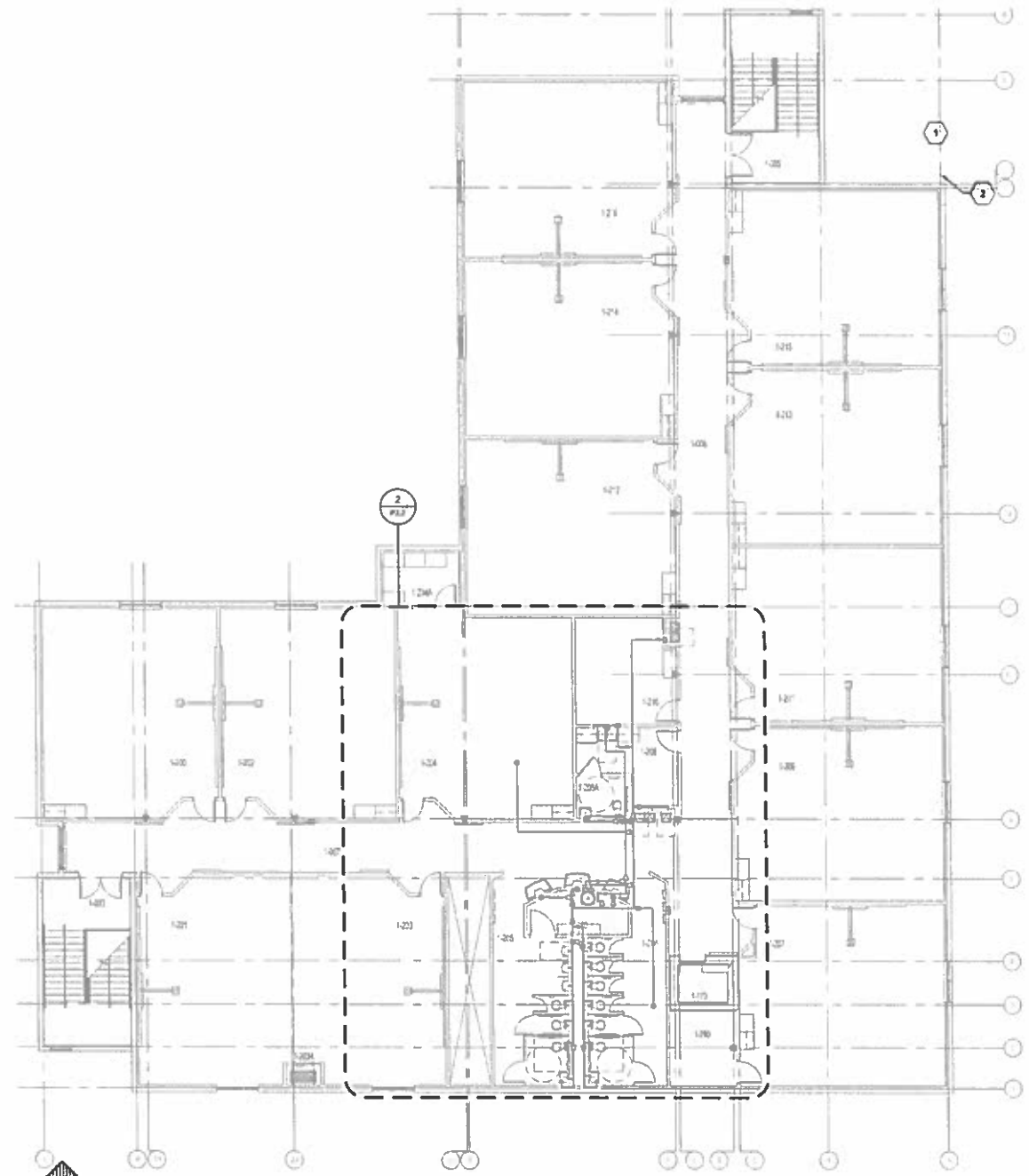

2 OVERALL DOMESTIC WATER FLOOR PLAN - 2ND FLOOR

SCALE: 3/32" = 1'-0"

DOMESTIC WATER KEY NOTES:

1. DOMESTIC WATER SUPPLY CONNECTION FROM METER. REFERENCE CIVIL SITE PLAN
2. PROVIDE PEDESTRIAN-TRAFFIC-RATED IN-GROUND VALVE BOX FOR MAIN SHUTOFF VALVE.
3. ELECTRIC WATER HEATER SHALL BE CEILING/WALL-MOUNTED AND INSTALLED ABOVE JSK-1. PAN DRAIN SHALL DRAIN TO JSK-1 BELOW. REFERENCE WATER HEATER INSTALLATION DETAIL.
4. WATER SUPPLY LINE SERVING RESTROOM FIXTURES SHALL TURN DOWN IN WALL CAVITY AND ROUTE ALONG WALL AT FIXTURE ELEVATION TO SERVE FIXTURES.
5. 3/4"Ø CW SUPPLY UP TO HOSE BIB ON ROOF.

RGD
CONSULTING ENGINEERS

MICHAEL J. BISHOP
FLORIDA P.E. NO.
MECHANICAL ENGINEER
CERT OF AUTH. 9494
DATE 9.19.2014

These Drawings are NOT VALID for any purpose which requires the original signature and seal of the engineer unless the original signature and seal are affixed.
Drawings not signed and sealed by the engineer shall not be submitted to any authority or used for any purpose where signed and sealed documents are required.

HARVARD•JOLLY
ARCHITECTURE
Ft. Lauderdale 954-486-2910
Ft. Myers 239-337-7771
Jacksonville 904-398-1300
Orlando 407-587-7727
Punta Gorda 941-575-0403
St. Petersburg 727-896-4611
Tampa 813-282-2000
West Palm Beach 561-478-4457
AAC000119
www.HARVARDJOLLY.com
WESTPALMBEACH, FL.

NEW CLASSROOM BUILDING
RIVIERA BEACH MARITIME ACADEMY
RIVIERA BEACH, FLORIDA
CONTRUCTION DOCUEMENTS

Contr. No:	214031.00
Date:	09-24-14
Drawn:	RGD
Revised:	

copyright 2014

P2.1

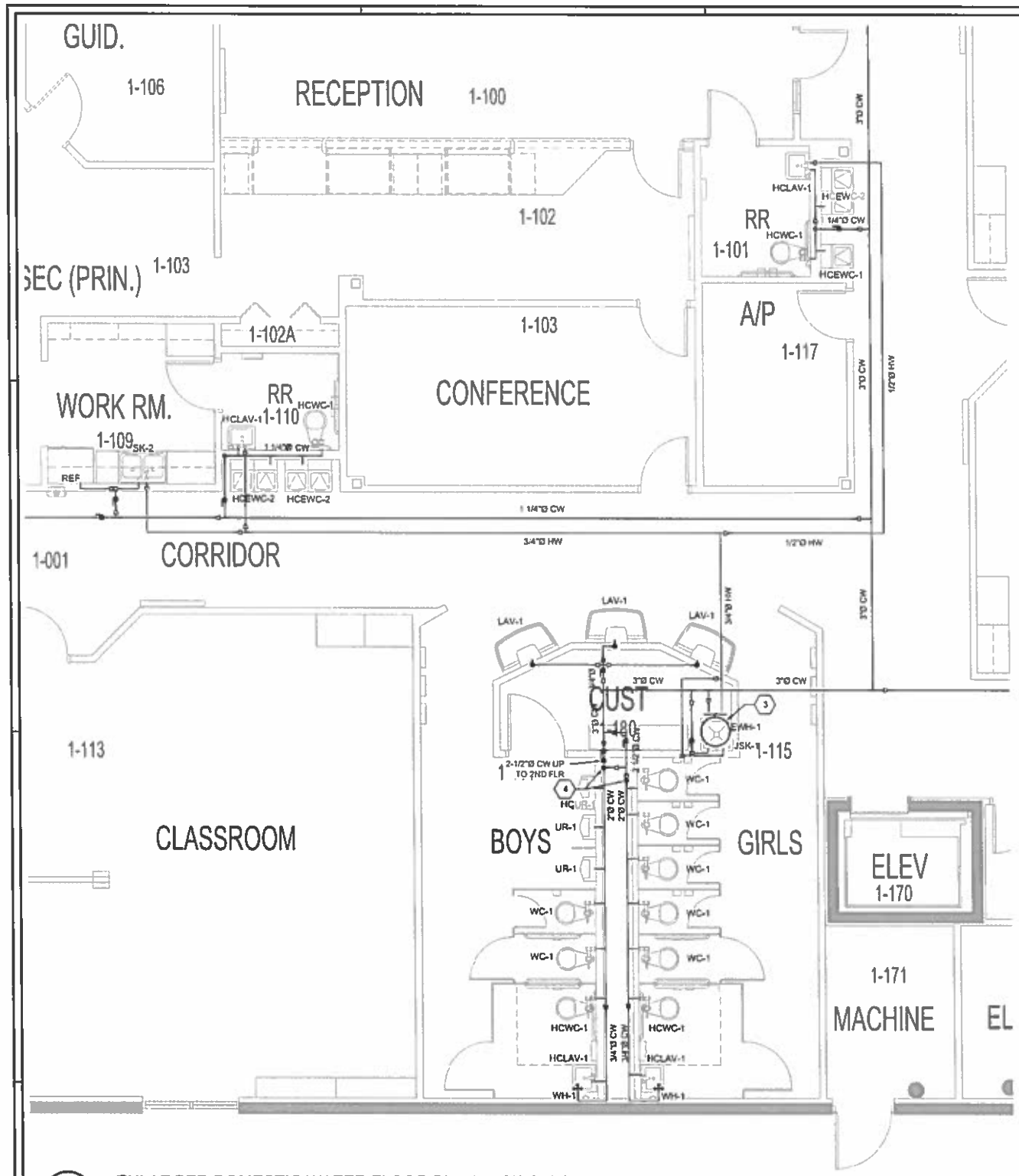

1 ENLARGED DOMESTIC WATER FLOOR PLAN - 1ST FLOOR

SCALE: 1/4" = 1'-0"

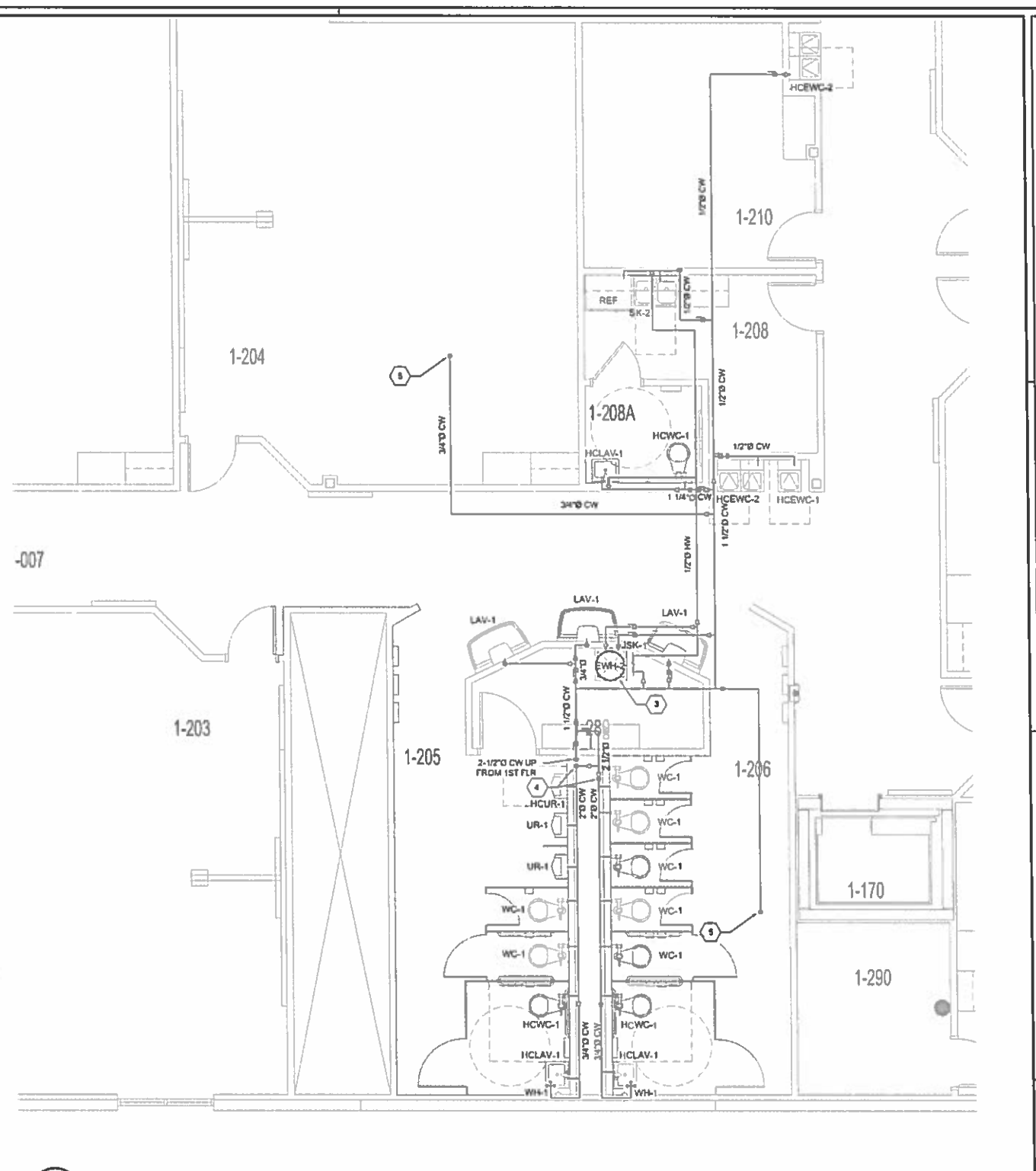

2 ENLARGED DOMESTIC WATER FLOOR PLAN - 2ND FLOOR

SCALE: 1/4" = 1'-0"

DOMESTIC WATER KEY NOTES:

1. DOMESTIC WATER SUPPLY CONNECTION FROM METER. REFERENCE CIVIL SITE PLAN.
2. PROVIDE PEDESTRIAN-TRAFFIC-RATED IN-GROUND VALVE BOX FOR MAIN SHUTOFF VALVE.
3. ELECTRIC WATER HEATER SHALL BE CEILING/WALL-MOUNTED AND INSTALLED ABOVE JSK-1. PAN DRAIN SHALL DRAIN TO JSK-1 BELOW. REFERENCE WATER HEATER INSTALLATION DETAIL.
4. WATER SUPPLY LINE SERVING RESTROOM FIXTURES SHALL TURN DOWN IN WALL CAVITY AND ROUTE ALONG WALL AT FIXTURE ELEVATION TO SERVE FIXTURES.
5. 3/4"Ø CW SUPPLY UP TO HOSE BIB ON ROOF.

RGD
CONSULTING ENGINEERS
SUSTAINABLE | MECHANICAL | PLUMBING | FIRE PROTECTION | STRUCTURAL
www.rgdengineers.com
MAIN: 561-686-4411
1217 PORT WINDSOR DR., SUITE 100, JUPITER, FL 33458 (561) 745-0555

These Drawings are NOT VALID for any purpose which requires the original signature and seal of the engineer unless the original signature and seal are affixed. Drawings not signed and sealed by the engineer shall not be submitted to any authority or used for any purpose where signed and sealed documents are required.

MICHAEL J. BISHOP
FLORIDA P.E. NO. 73000
MECHANICAL ENGINEER
CERT OF AUTH. 3454
DATE 9.19.2014

HARVARD•JOLLY
ARCHITECTURE

Ft. Lauderdale 954-486-2910
Ft. Myers 239-337-2774
Jacksonville 904-388-3200
Orlando 407-487-1727
Punta Gorda 941-575-0403
St. Petersburg 727-896-4411
Tampa 813-236-0200
West Palm Beach 561-478-4457
AAC000119
www.harvardjolly.com
WEST PALM BEACH, FL.

NEW CLASSROOM BUILDING
RIVIERA BEACH MARITIME ACADEMY
RIVIERA BEACH, FLORIDA
CONTRUCTION DOCUMENTS

Contr. No: 214031.00
Date: 09-24-14
Drawn: RGD
Revised:

copyright 2014

P2.2

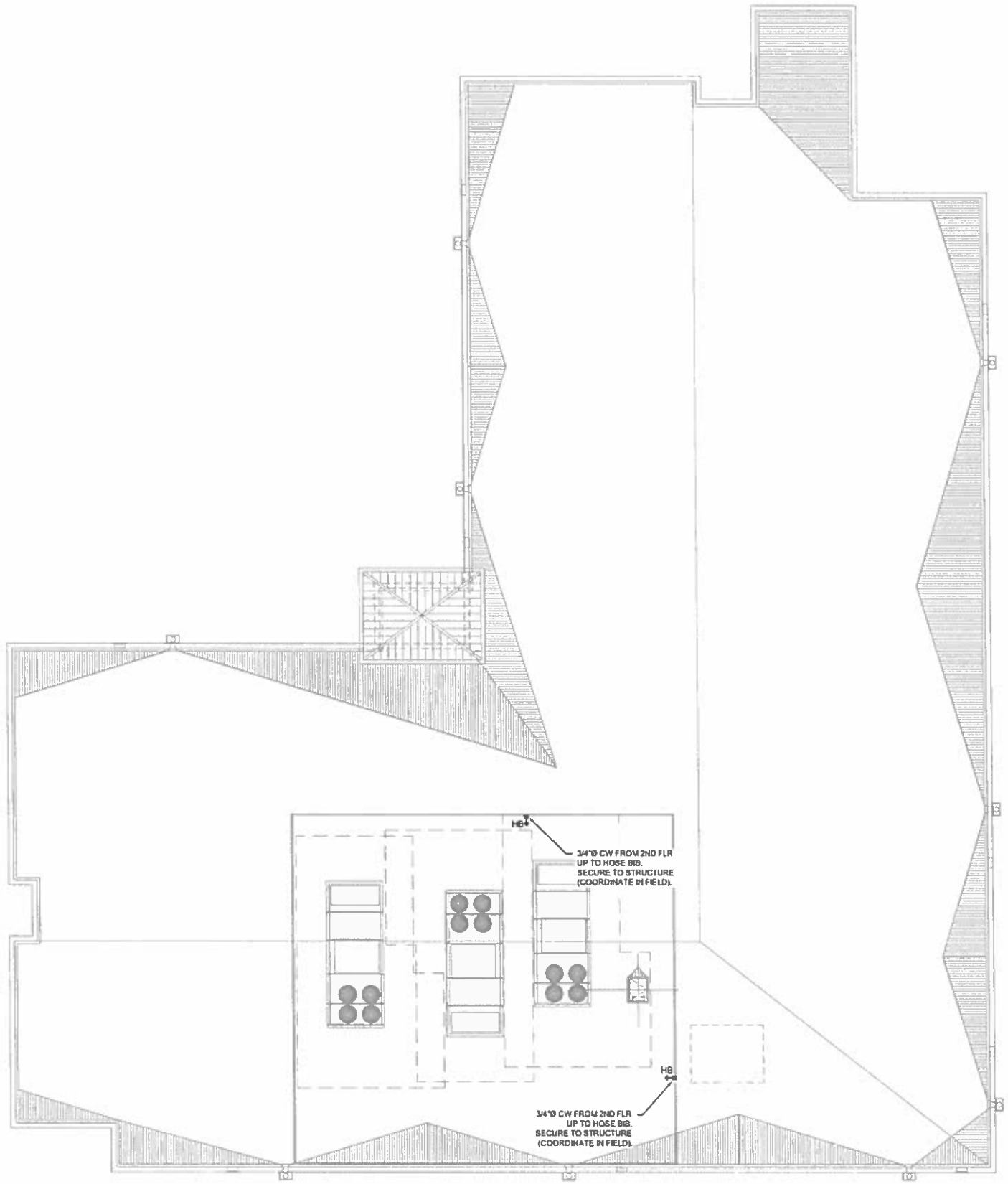

1 DOMESTIC WATER ROOF PLAN

SCALE: 1/8" = 1'-0"

RGD
CONSULTING ENGINEERS

MICHAEL J. BISHOP
FLORIDA P.E. NO. 73900
MECHANICAL ENGINEER
CERT. OF AUTH. 5494
DATE 9.19.2014

HARVARD•JOLLY
ARCHITECTURE

FL Lauderdale 954-486-7910
FL Myers 239-275-7774
Jacksonville 904-395-3300
Orlando 407-687-7727
Punta Gorda 941-575-0403
St. Petersburg 727-896-4611
Tampa 813-286-8008
West Palm Beach 561-478-4457
AAC000119
www.harvardjolly.com
WEST PALM BEACH, FL

NEW CLASSROOM BUILDING
RIVIERA BEACH MARITIME ACADEMY
RIVIERA BEACH, FLORIDA
CONTRUCTION DOCUEMENTS

Comm. No:	214031.00
Date:	09-24-14
Drawn:	RGD
Revised:	

copyright 2014

P2.3

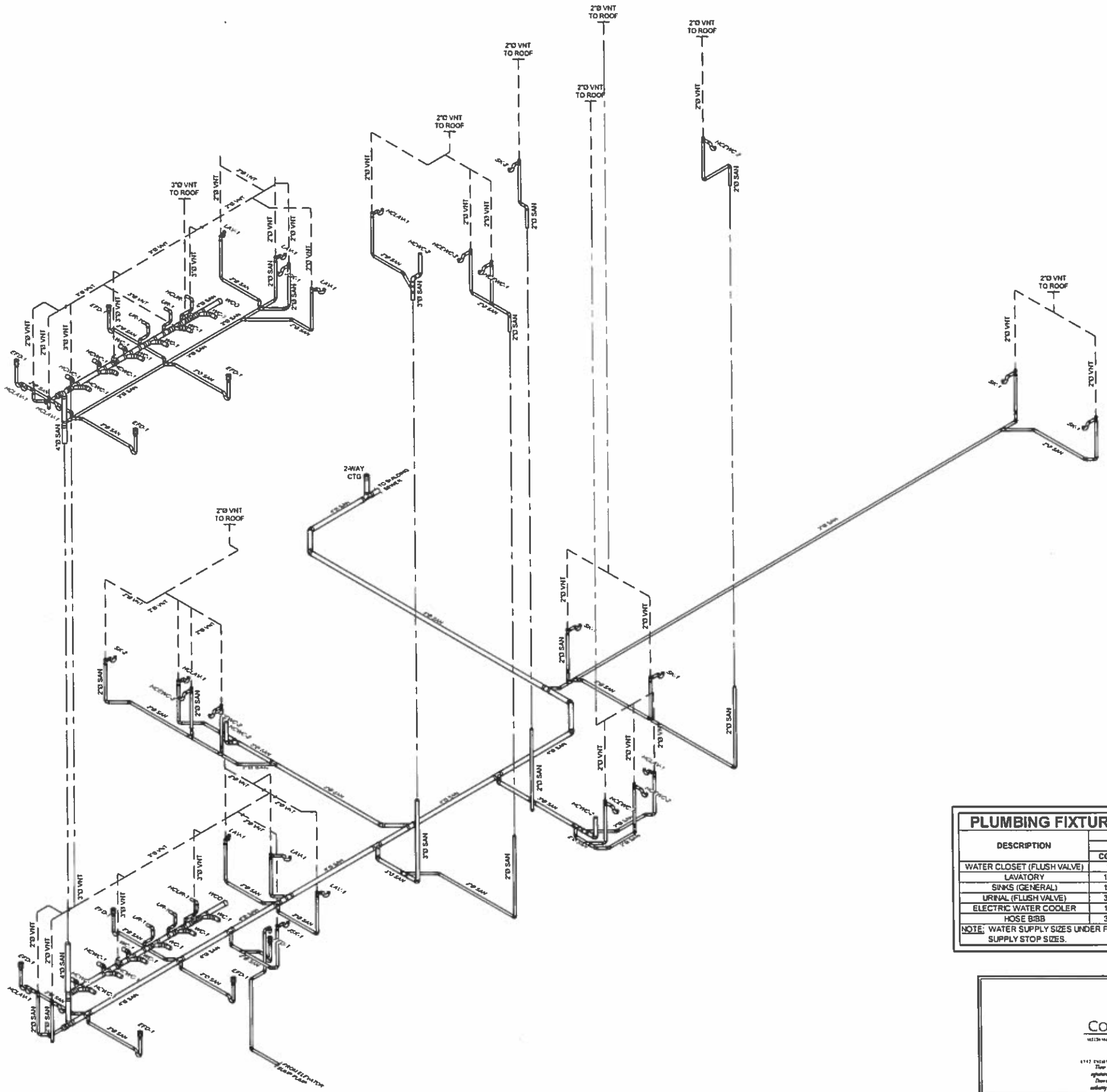

PLUMBING FIXTURE CONNECTION SCHEDULE

DESCRIPTION	WATER SUPPLY				TRAP	VENT
	BRANCH		FIXTURE			
	COLD	HOT	COLD	HOT		
WATER CLOSET (FLUSH VALVE)	1"	-	1"	-	3"	2"
LAVATORY	1/2"	1/2"	3/8"	3/8"	1 1/4"	2"
SINKS (GENERAL)	1/2"	1/2"	3/8"	3/8"	1 1/4"	2"
URINAL (FLUSH VALVE)	3/4"	-	3/4"	-	2"	2"
ELECTRIC WATER COOLER	1/2"	-	3/8"	-	1 1/4"	2"
HOSE BIBB	3/4"	-	3/4"	-	-	-

NOTE: WATER SUPPLY SIZES UNDER FIXTURE COLUMN ARE CONNECTION TO FIXTURE OR SUPPLY STOP SIZES.

RGD
CONSULTING ENGINEERS
MECHANICAL | ELECTRICAL | PLUMBING | FIRE PROTECTION | ELECTRICAL
www.rgdeng.com
(407) 647-7400
6767 ORLANDO VISTA BLVD. SUITE 104, ORLANDO, FL 32810 (407) 647-7400
These Drawings are NOT VALID for any purpose unless requires the original signature and seal of the engineer under the original signature and seal are affixed. Drawings not signed and sealed by the engineer shall not be submitted to any authority or used for any purpose where signed and sealed documents are required.

MICHAEL J. BISHOP
FLORIDA P.E. NO. 72805
MECHANICAL ENGINEER
CERT. OF AUTH. 5434
DATE: 9.19.2014

HARVARD•JOLLY
ARCHITECTURE

Ft. Lauderdale 954-428-7910
Ft. Myers 239-275-7774
Jacksonville 904-366-3300
Orlando 407-647-7727
Punta Gorda 941-575-0401
St. Petersburg 727-896-4611
Tampa 813-264-8208
West Palm Beach 561-478-4457
AAC000119
www.harvardjolly.com
WEST PALM BEACH, FL

NEW CLASSROOM BUILDING
RIVIERA BEACH MARITIME ACADEMY
RIVIERA BEACH, FLORIDA
CONTRUCTION DOCUEMENTS

Const. No: 214031.00
Date: 09-24-14
Drawn: RGD
Reviewed:

copyright 2014

P3.1

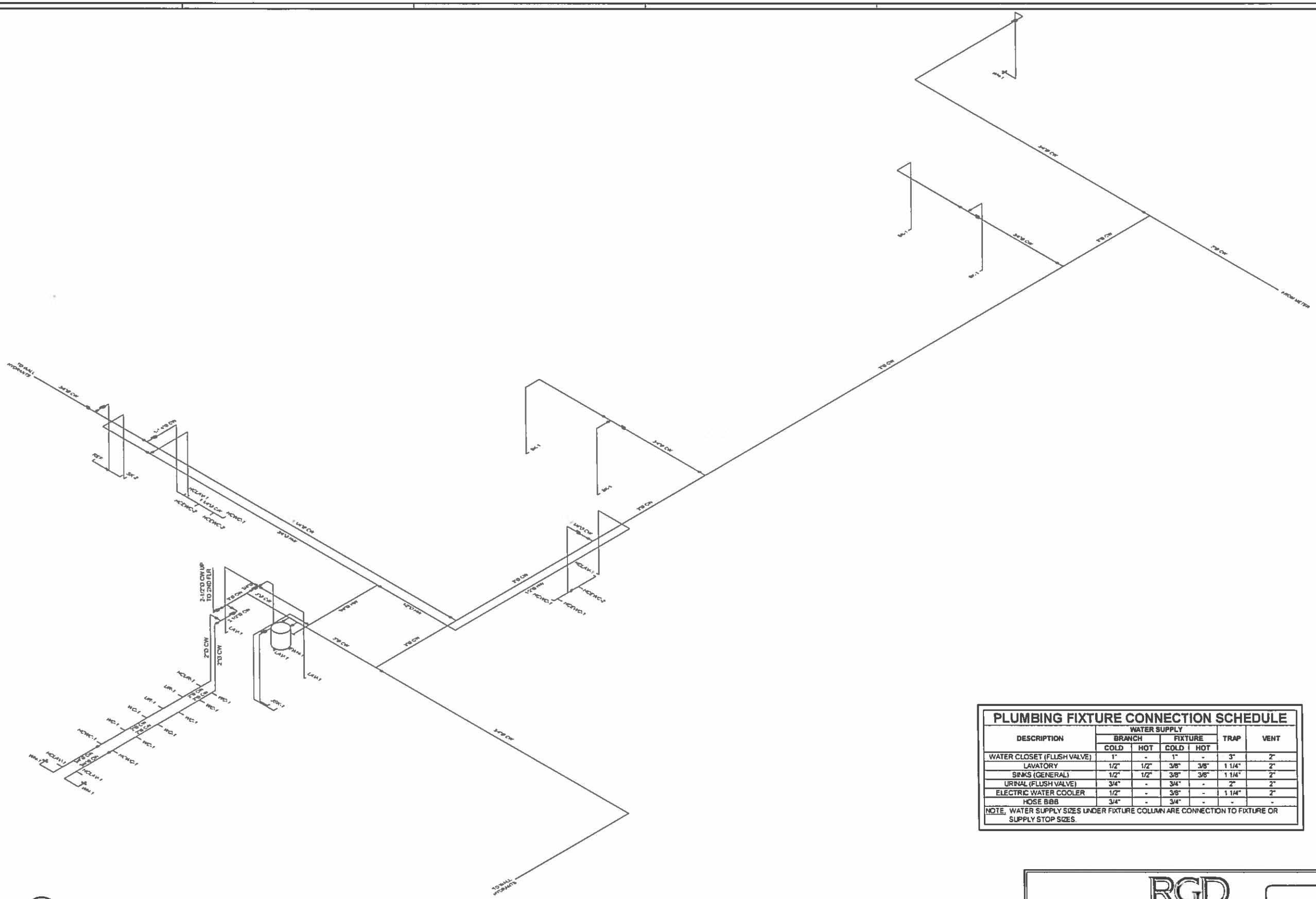

1 DOMESTIC WATER ISOMETRIC PLAN - 1ST FLOOR

N.T.S.

PLUMBING FIXTURE CONNECTION SCHEDULE

DESCRIPTION	WATER SUPPLY				TRAP	VENT
	BRANCH		FIXTURE			
	COLD	HOT	COLD	HOT		
WATER CLOSET (FLUSH VALVE)	1"	-	1"	-	3"	2"
LAVATORY	1/2"	1/2"	3/8"	3/8"	1 1/4"	2"
SINKS (GENERAL)	1/2"	1/2"	3/8"	3/8"	1 1/4"	2"
URINAL (FLUSH VALVE)	3/4"	-	3/4"	-	2"	2"
ELECTRIC WATER COOLER	1/2"	-	3/8"	-	1 1/4"	2"
HOSE BIBB	3/4"	-	3/4"	-	-	-

NOTE, WATER SUPPLY SIZES UNDER FIXTURE COLUMN ARE CONNECTION TO FIXTURE OR SUPPLY STOP SIZES.

RGD
CONSULTING ENGINEERS
MECHANICAL | ELECTRICAL | PLUMBING | FIRE PROTECTION | TECHNOLOGY
www.rgdeng.com
ATLANTA | TAMPA
1117 PERIMETER CENTER WEST, SUITE 101, ATLANTA, GA 30338 | 404.843.1010

These Drawings are NOT VALID for any purpose which requires the original signature and seal of the engineer unless the original signature and seal are affixed. Drawings not signed and sealed by the engineer shall not be submitted to any authority or used for any purpose where signed and sealed documents are required.

MICHAEL J. BIRD CP
FLORIDA P.E. NO. 73869
MECHANICAL ENGINEER
CERT OF AUTH. 5494
DATE 9.19.2014

HARVARD•JOLLY
ARCHITECTURE

Ft Lauderdale 954-486-7910
Ft Myers 239-337-2274
Jacksonville 904-389-3300
Orlando 407-687-3727
Punta Gorda 941-575-0400
St. Petersburg 727-866-4811
Sarasota 941-952-0600
West Palm Beach 561-478-4457
AAC000119
www.harvardjolly.com
WEST PALM BEACH, FL

NEW CLASSROOM BUILDING
RIVIERA BEACH MARITIME ACADEMY
RIVIERA BEACH, FLORIDA
CONTRUCTION DOCUEMENTS

Comm. No:	214031.00
Date:	09-24-14
Drawn:	RGD
Revised:	

copyright 2014

P4.1

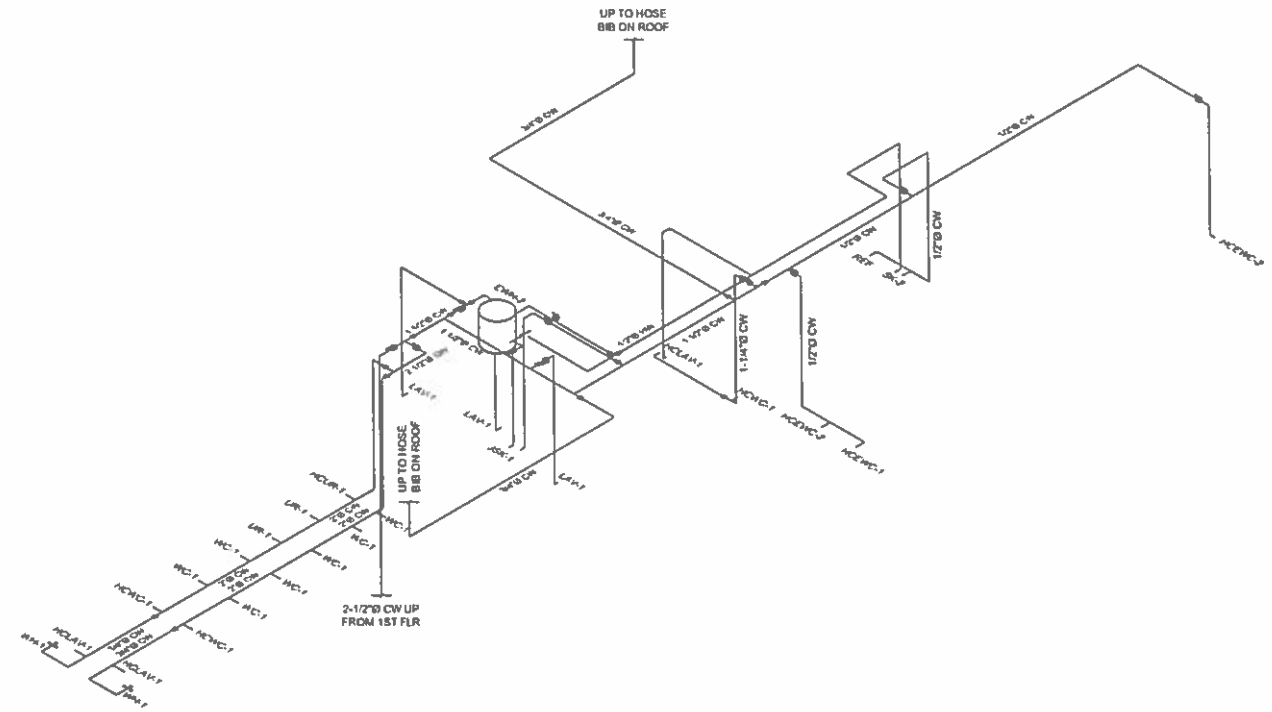

1 DOMESTIC WATER ISOMETRIC PLAN - 2ND FLOOR

N.T.S.

PLUMBING FIXTURE CONNECTION SCHEDULE

DESCRIPTION	WATER SUPPLY				TRAP	VENT
	BRANCH		FIXTURE			
	COLD	HOT	COLD	HOT		
WATER CLOSET (FLUSH VALVE)	1"	-	1"	-	3"	2"
LAVATORY	1/2"	1/2"	3/8"	3/8"	1 1/4"	2"
SINKS (GENERAL)	1/2"	1/2"	3/8"	3/8"	1 1/4"	2"
URINAL (FLUSH VALVE)	3/4"	-	3/4"	-	2"	2"
ELECTRIC WATER COOLER	1/2"	-	3/8"	-	1 1/4"	2"
HOSE BIBB	3/4"	-	3/4"	-	-	-

NOTE, WATER SUPPLY SIZES UNDER FIXTURE COLUMN ARE CONNECTION TO FIXTURE OR SUPPLY STOP SIZES.

RGD
CONSULTING ENGINEERS

MICHAEL J. BISHOP
FLORIDA P.E. NO. [illegible]
MECHANICAL ENGINEER
CERT OF AUTH. 5454
DATE 9.19.2014

HARVARD•JOLLY
ARCHITECTURE

Ft. Lauderdale 954-486-7910
Ft. Myers 239-275-7774
Jacksonville 904-396-3300
Orlando 407-667-7727
Punta Gorda 941-575-0403
St. Petersburg 727-895-4611
Tampa 813-286-8205
West Palm Beach 561-478-4457
AAC000119
www.Harvardjolly.com
WEST PALM BEACH, FL

NEW CLASSROOM BUILDING
RIVIERA BEACH MARITIME ACADEMY
RIVIERA BEACH, FLORIDA
CONTRUCTION DOCUEMENTS

Comm. No: 214031.00
Date: 09-24-14
Drawn: RGD
Revised:

copyright 2014

P4.2

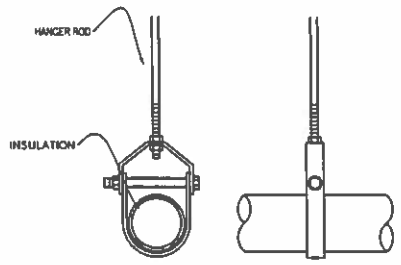

1 PIPE HANGER DETAIL
N.T.S

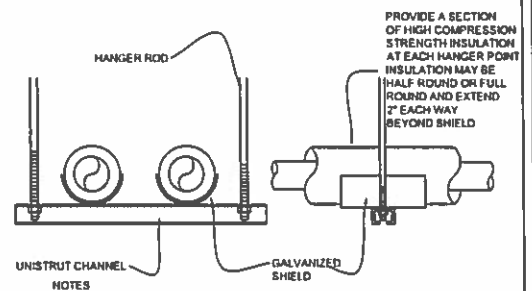

NOTES

1. ATTACH SUPPORTS FOR ALL PIPING SUSPENDED FROM THE STEEL STRUCTURE TO THE TOP CORD OF JOISTS OR BEAMS.

2. PROVIDE COPPER OR PLASTIC COATED HANGERS FOR NON-INSULATED COPPER PIPE.

2 INSULATED MULTIPLE PIPE HANGER DETAIL
N.T.S

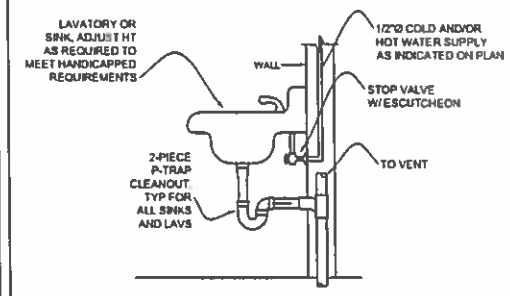

3 TYPICAL SINK/LAV INSTALLATION
N.T.S

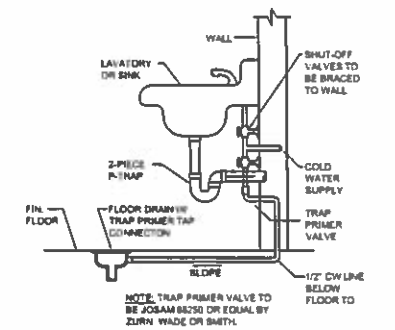

4 TRAP PRIME DETAIL
N.T.S

ELEVATOR SUMP PUMP SYSTEM SHALL MEET ALL REQUIREMENTS OF FBC-2010 PLUMBING SECTIONS 712.3 & 1003.4.

THE CONTRACTOR SHALL COORDINATE SPECIFIC REQUIREMENTS WITH THE AUTHORITY HAVING JURISDICTION.

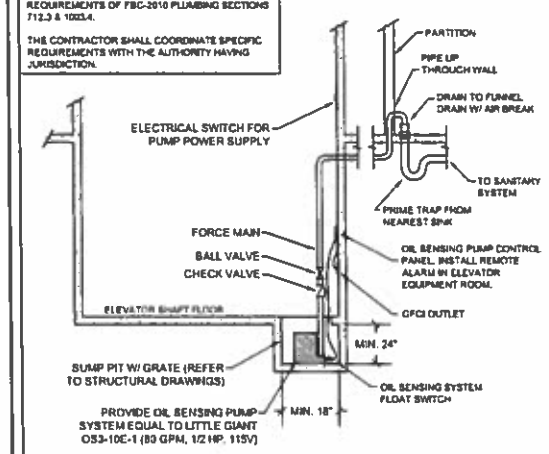

5 ELEVATOR SUMP PUMP DETAIL
N.T.S.

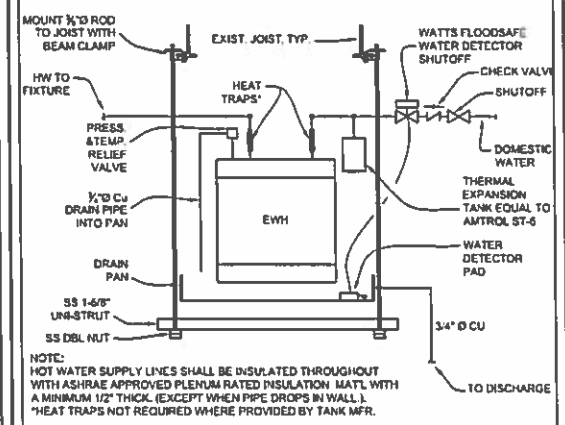

NOTE:
HOT WATER SUPPLY LINES SHALL BE INSULATED THROUGHOUT WITH ASHRAE APPROVED PLENUM RATED INSULATION MAT'L WITH A MINIMUM 1/2" THICK. (EXCEPT WHEN PIPE DROPS IN WALL.).
*HEAT TRAPS NOT REQUIRED WHERE PROVIDED BY TANK MFR.

6 EWH MOUNTING & PIPING DETAIL
N.T.S

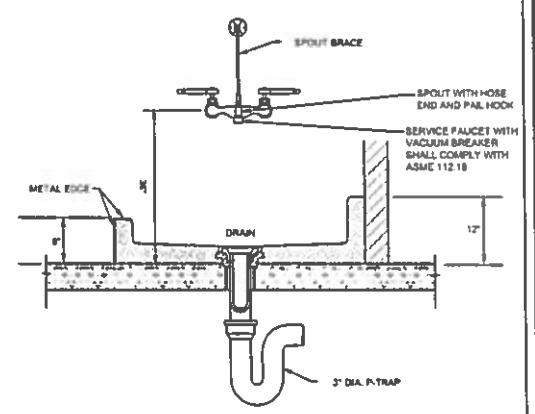

7 MOP SINK DETAIL
N.T.S

RGD
CONSULTING ENGINEERS
MECHANICAL | ELECTRICAL | PLUMBING | FIRE PROTECTION | STRUCTURAL
www.rgdengineers.com
LB#26 EX 9 of 12a
1737 PROSPERITY AVE. SUITE 100, DUNEDIN, FL 34698 (727) 341-8616

These Drawings are NOT VALID for any purpose which requires the original signature and seal of the engineer unless the original signature and seal are affixed. Drawings not signed and sealed by the engineer shall not be submitted to any authority or used for any purpose where signed and sealed documents are required.

MICHAEL J. BISHOP
FLORIDA P.E. NO. 73000
MECHANICAL ENGINEER
CERT. OF AUTH. 5434
DATE 9.10.2014

HARVARD•JOLLY
ARCHITECTURE

Ft. Lauderdale 954-489-7910
Ft. Myers 239-337-2272
Jacksonville 904-365-3300
Orlando 407-647-7777
Punta Gorda 941-575-0403
St. Petersburg 727-898-4811
Tampa 813-289-1000
West Palm Beach 561-478-4457
AA#C000119
www.HARVARDJOLLY.com
ARCHITECTURE@HJ.COM, FL

NEW CLASSROOM BUILDING
RIVIERA BEACH MARITIME ACADEMY
RIVIERA BEACH, FLORIDA
CONTRUCTION DOCUEMENTS

Contr. No:	214031.00
Date:	09-24-14
Drawn:	RGD
Revised:	

copyright 2014

P5.1

PLUMBING FIXTURE SCHEDULE

MARK	ITEM	MANUFACTURER	DESCRIPTION	MOUNTING HEIGHT	MOUNTING	FAUCET/VALVE	TRIM/ACCESSORIES	NOTES
WC-1	WATER CLOSET	AMERICAN STANDARD	AFWALL MODEL 2859 016 ELONGATED 1.6GPF, W/ WALL CARRIER	15"	WALL HUNG	SLOAN ROYAL MODEL OPTIMA 111-1.6 ES-S TMO EXPOSED, SENSOR ACTIVATED WATER CLOSET FLUSHOMETER WITH TRUE MECHANICAL OVERRIDE BUTTON. FOR TOP SPUD BOWLS	BEMIS MODEL 1955C000 ELONGATED OFLC SEAT	1, 2, 4
HCWC-1	ADA WATER CLOSET (CHILDREN)	AMERICAN STANDARD	AFWALL MODEL 2258 016 ELONGATED 1.6GPF, W/ WALL CARRIER, ADA COMPLIANT	15"	WALL HUNG	SLOAN ROYAL MODEL OPTIMA 111-1.6 ES-S TMO EXPOSED, SENSOR ACTIVATED WATER CLOSET FLUSHOMETER WITH TRUE MECHANICAL OVERRIDE BUTTON. FOR TOP SPUD BOWLS	BEMIS MODEL 1955C000 ELONGATED OFLC SEAT	1, 2, 3, 4
HCWC-2	ADA WATER CLOSET (ADULT)	AMERICAN STANDARD	MADERA MODEL 3043.718 BOTTOM OUTLET ELONGATED 1.6 GPF FLUSHOMETER TOILET VITREOUS CHINA WITH EVERCLEAN	18.5	FLOOR MOUNT	SLOAN ROYAL MODEL OPTIMA 111-1.6 ES-S TMO EXPOSED, SENSOR ACTIVATED WATER CLOSET FLUSHOMETER WITH TRUE MECHANICAL OVERRIDE BUTTON. FOR TOP SPUD BOWLS	BEMIS MODEL 1955C000 ELONGATED OFLC SEAT	1, 2, 3
UR-1	URINAL	AMERICAN STANDARD	WASHBROOK MODEL 6590.001 FLOWISE 0.5 GPF WITH WALL CARRIER, TOP SUPUD, SS STRAINER.	24"	WALL HUNG	SLOAN ROYAL MODEL OPTIMA 180 ES-S, EXPOSED, SENSOR ACTIVATED URINAL FLUSHOMETER, FOR 1 1/4" TOP SPUD URINALS	N/A	1, 2, 4
HCUR-1	ADA URINAL	AMERICAN STANDARD	WASHBROOK MODEL 6590.001 FLOWISE 0.5 GPF WITH WALL CARRIER, TOP SUPUD, SS STRAINER.	15.25"	WALL HUNG	SLOAN ROYAL MODEL OPTIMA 180 ES-S, EXPOSED, SENSOR ACTIVATED URINAL FLUSHOMETER, FOR 1 1/4" TOP SPUD URINALS	N/A	1, 2, 3, 4
HCLAV-1	HC LAVATORY	AMERICAN STANDARD	LUCERNE 355.012.020	34"	WALL HUNG	AMERICAN STANDARD ELECTRONIC SENSOR FAUCET WITH ELECTRIC POWER SUPPLY, GRID STRAINER, ADD OFFSET P-TRAP AND INSULATION KIT FOR ADA INSTALLATION	N/A	1, 2, 3, 4
LAV-1	MULTI-USE LAVATORY	BRADLEY	BRADLEY MF2944 TERREON QUADRA-FRONT WASHFOUNTAIN	34"	WALL HUNG	BATTERY INFRARED CONTROL	GRID STRAINER AND OFFSET P-TRAP	1, 2
SK-1	CLASS ROOM SINK	ELKAY	CDKAK251765 6 1/2" DEEP 2LM (LEFT MIDDLE) HOLE FAUCET DRILLING, SS SINGLE BOWL SELF-RIMMING CLASS ROOM SINK WITH (1) BUBBLER SLOTTED HOLE, COLD WATER ONLY	34"	SELF-RIMMING	ELKAY LKD208513LC SINGLE HANDLE GOOSENECK FAUCET LK114A BUBBLER, LKVR18 STRAINER		1, 2
SK-2	DOUBLE BOWL SINK	ELKAY	GECR3321 - 5 3/8" DEEP, 4" CENTERS FAUCET HOLE DRILLING, 20 GAUGE, TYPE 304 SS SELF	34"	SELF-RIMMING	LK408AT10TB DECK MOUNT 4" CENTER FAUCET, 10" SPOUT, 8" WRIST BLADE HANDLES	STRAINER, OFFSET P-TRAP	1, 2
HCEWC-1	ADA ELECTRIC WATER FOUNTAIN	ELKAY	MODEL EZS8 ADA WALL HUNG WATER COOLER	31-5/16" ADA REQ.	WALL HUNG	N/A	N/A	1, 2, 3, 4
HCEWC-2	LOW-H9 ELECTRIC WATER FOUTAIN	ELKAY	MODEL EZSTLR8LC 370 WATTS AT 115/1/60	N/A	WALL HUNG	N/A	N/A	1, 2, 3, 4
JNSK-1	JANITOR'S SINK	FIAT	MODEL MSB3624 JANITOR'S SINK	N/A	FLOOR MOUNT	830 AA WALL MOUNT FAUCET	PAIL HOOK, SS STRAINER, AND TREADED HOSE CONNECTION.	1, 2
WH-1	WALL HYDRANT	ZURN	Z1300 ECOLOTROL WALL HYDRANT, ENCASED, ANTI-SIPHON, AUTOMATIC DRAINING	N/A	WALL HUNG	N/A		1, 2

NOTES:
1. MAKE, MODEL, AND COLOR OF FIXTURE AND TRIM SHALL BE SPECIFIED BY THE ARCHITECT.
2. VERIFY FIXTURE MOUNTING HEIGHTS WITH ARCHITECT'S PLANS & INTERIOR ELEVATIONS.
3. FIXTURE SHALL BE ADA COMPLIANT. VERIFY REQUIRED MOUNTING HEIGHT & ACCESSIBILITY CLEARANCES WITH LOCAL CODES BEFORE INSTALLING FIXTURE.
4. CONTRACTOR SHALL VERIFY THAT WALL-MOUNTED FIXTURE AND CARRIER HAS ADEQUATE WALL CLEARANCE. COORDINATE WITH ARCHITECTURAL WALL SECTIONS.

ELECTRIC WATER HEATER SCHEDULE

SELECTION				PIPING		HEATER		ELECTRICAL		GENERAL	
MARK	MANUFACTURER	MODEL	CAPACITY (GAL)	INLET (IN)	OUTLET (IN)	kW	FLOW / TEMP. RISE (°F)	VOLTAGE / PHASE	AMPS	WEIGHT (LBS)	DIMENSIONS (IN)
EWH-1	LOCHINVAR	EJU020KS	20	3/4"	3/4"	4.5	27 GPH @ 70°F	208V / 1 Ø	-	73	21.75 Ø X 22.25 H
EWH-2	LOCHINVAR	EJU020KS	20	3/4"	3/4"	4.5	27 GPH @ 70°F	208V / 1 Ø	-	73	21.75 Ø X 22.25 H

ACCEPTED ALTERNATE MANUFACTURERS: AO SMITH

PLUMBING DRAIN SCHEDULE

MARK	ITEM	MANUFACTURER	MODEL	STRAINER HEAD (IN)	NOTES
FFD-1	FLOOR DRAIN	ZURN	Z415SZ	5"	1, 2, 3
FFD-1	FUNNEL FLOOR DRAIN	ZURN	Z415E	7"	1, 2, 3

NOTES:
1. COORDINATE FINISH WITH THE ARCHITECT AND/OR OWNER.
2. PROVIDE A TRAP PRIMER CONNECTION FROM THE FACTORY.
3. COORDINATE SPECIFIC DRIAN OUTLET SIZE WITH CONNECTED PIPE DIMENSIONS. REFERENCE PLANS FOR DRAIN PIPE DIMENSIONS. PROVIDE TRANSITIONS AS REQUIRED.

DOMESTIC WATER DEMAND

1ST FLOOR			
DESCRIPTION	#	FU EA.	TOT. FU
DRINKING FOUNTAIN	4	0.3	1.0
KITCHEN SINK (PRIVATE)	1	1.4	1.4
URINAL (3/4" FLUSH VALVE)	3	5.0	15.0
SERVICE SINK	5	3.0	15.0
LAVATORY (PUBLIC)	7	2.0	14.0
WATER CLOSET (FLUSH VALVE)	11	10.0	110.0
			156.4
2ND FLOOR			
DESCRIPTION	#	FU EA.	TOT. FU
KITCHEN SINK (PRIVATE)	1	1.4	1.4
DRINKING FOUNTAIN	3	0.3	0.75
URINAL (3/4" FLUSH VALVE)	3	5.0	15.0
SERVICE SINK	1	3.0	3.0
LAVATORY (PUBLIC)	6	2.0	12.0
WATER CLOSET (FLUSH VALVE)	10	10.0	100.0
			132.15
FBC-P TABLE E103.3(3), TABLE E103.2(2)		TOTAL =	288.55

TABLE E103.3(3)
VELOCITY 6FT / SEC MAX

TOTAL BUILDING FU = 288.6
DEMAND FLOW = 108 GPM
SERVICE LINE SIZE = 3"Ø

WATER SERVICE CALCULATION

TOTAL FIXTURE UNITS	288.6
TOTAL DEMAND FLOW	108 GPM
SERVICE PIPE SIZE	3"Ø
WATER VELOCITY	8.0 FT/SEC
PP: PIPE LOSS	.5 PSIG/100
LEQ	420 FT

(25) - (5) - [(420/100) x .5] - (19/2.3) - (5) = 56 PSIG @ FLOW

(PP) + (PV) + ((LEQ /100) x PP) + (H/2.3) + (PV) = PS

PS = REQUIRED SERVICE PRESSURE (AT BLDG ENTRANCE, AT FLOW AFTER METER)

PP = PRESSURE REQUIRED AT THE FIXTURE OR FLUSH VALVE. MOST FIXTURES 10-15 PSIG FLUSH VALVES 20-25 PSIG.

PV = PRESSURE LOSS ACROSS THE MAIN ISOLATION VALVE AND THE LOCAL ISOLATION VALVE (PSIG)

PP = PRESSURE LOSS IN PIPE AT FLOW PSIG-100 ft OF PIPE REF FBC-P FIGURES E103.3(3) TYPE L COPPER PIPE

LEQ = TOTAL EQUIVALENT PIPE LENGTH INCLUDING FITTINGS. THIS IS APPROXIMATELY EQUAL TO 1.5 TIMES THE DEVELOPED PIPE LENGTH FROM THE MAIN ISOLATION VALVE TO THE FARTHEST FIXTURE. (FEET)

H = HEIGHT OF THE HIGHEST FIXTURE ABOVE GROUND LEVEL. (FEET)

SANITARY DEMAND

(BASED ON 2010 FBC - PLUMBING, TABLE 709.1)

1ST FLOOR			
DESCRIPTION	#	DFU EA.	TOTAL DFU
DRINKING FOUNTAIN	4	0.5	2.0
EMERGENCY FLOOR DRAIN	5	0	0.0
JANITOR SINK	1	2	2.0
KITCHEN SINK, DOMESTIC	1	2	2.0
LAVATORY	7	1	7.0
SINK	4	2	8.0
URINAL (≤ 1 GAL/FLUSH)	3	2	6.0
WATER CLOSET, PUBLIC (1.6 GPF)	11	4	44.0
			71.0
2ND FLOOR			
DESCRIPTION	#	DFU EA.	TOTAL DFU
DRINKING FOUNTAIN	3	0.5	1.5
EMERGENCY FLOOR DRAIN	4	0	0.0
JANITOR SINK	1	2	2.0
KITCHEN SINK, DOMESTIC	1	2	2.0
LAVATORY	6	1	6.0
URINAL (≤ 1 GAL/FLUSH)	3	2	6.0
WATER CLOSET, PUBLIC (1.6 GPF)	10	4	40.0
			57.5
		TOTAL =	128.5

MAXIMUM ALLOWABLE BUILDING DRAIN SIZE @ 1/8" / FT
(2010 FLORIDA BUILDING CODE - PLUMBING, TABLE 710.1(1))
3" = 36 FU
4" = 160 FU
6" = 700 FU

RGD
CONSULTING ENGINEERS
MECHANICAL | ELECTRICAL | PLUMBING | FIRE PROTECTION | STRUCTURAL
www.rgdengineers.com
4806 19TH AVE
1517 INTERNATIONAL BLVD, SUITE 104, HOUSTON, TX 77056 (713) 783-1004
These Drawings are NOT VALID for any purpose which requires the original signature and seal of the engineer unless the original signature and seal are affixed. Dimensions not signed and sealed by the engineer shall not be submitted to any authority or used for any purpose where signed and sealed documents are required.

MICHAEL J. BISHOP
FLORIDA P.E. NO. 73889
MECHANICAL ENGINEER
CERT. OF AUTH. 8484
DATE 9.18.2014

HARVARD•JOLLY
ARCHITECTURE

FL Lauderdale 954-486-7910
FL Lauderdale 239-275-7774
Jacksonville 904-396-3300
Orlando 407-687-7727
Punta Gorda 941-637-5403
St. Petersburg 727-896-9411
Tampa 813-295-6208
West Palm Beach 561-478-4437
AAC000119
www.harvardjolly.com
WEST PALM BEACH, FL

NEW CLASSROOM BUILDING
RIVIERA BEACH MARITIME ACADEMY
RIVIERA BEACH, FLORIDA
CONTRUCTION DOCUEMENTS

Contr. No: 214031.00
Date: 09-24-14
Drawn: RGD
Revised:

copyright 2014

P6.1

GENERAL STRUCTURAL NOTES

DESIGN CRITERIA

D1 ALL WORK SHALL CONFORM TO AT LEAST THE MINIMUM STANDARDS OF THE FLORIDA BUILDING CODE, 2010 EDITION.

D2 DESIGN LOADS PER FLORIDA BLDG. CODE.
WIND DESIGN PER ASCE 7-10
V(ult.)=180 MPH
RISK CATEGORY= III
a=12'-0" EXPOSURE C
qh(ult.)=41.6 PSF ENCLOSED BUILDING
Kd=0.85

D3 FOUNDATION DESIGN VALUES: 3000 PSF
BY: ECS FLORIDA, LLC
DATED: SEPTEMBER 8, 2014

D4 TO THE BEST OF THE ENGINEER'S KNOWLEDGE. THE STRUCTURAL PLANS AND SPECIFICATIONS HAVE BEEN DESIGNED IN ACCORDANCE WITH THE FLORIDA BUILDING CODE LATEST EDITION.

GENERAL

G1 PREPARATION OF THE STRUCTURAL DOCUMENTS ASSUMES THE GENERAL CONTRACTOR HAS A MINIMUM OF 5 YEARS EXPERIENCE IN SIMILAR TYPE METHOD OF CONSTRUCTION. PRIOR TO START OF CONSTRUCTION, ANY NOTES OR DETAILS THAT ARE NOT FULLY UNDERSTOOD SHALL BE BROUGHT TO THE A/E FIRM IN WRITING FOR CLARIFICATION.

G2 THE GENERAL CONTRACTOR SHALL REVIEW AND DETERMINE THAT DIMENSIONS ARE COORDINATED BETWEEN ARCHITECTURAL AND STRUCTURAL DRAWINGS PRIOR TO FABRICATION OR START OF CONSTRUCTION.

G3 THE GENERAL CONTRACTOR SHALL PROVIDE ALL MEASURES NECESSARY TO PROTECT THE STRUCTURE, THE WORK PERSONS, AND OTHER PEOPLE DURING CONSTRUCTION. HE SHALL SUPERVISE AND DIRECT THE WORK AND BE RESPONSIBLE FOR ALL CONSTRUCTION.

G4 NO STRUCTURAL MEMBER SHALL BE CUT, NOTCHED OR OTHERWISE REDUCED IN STRENGTH.

G5 THE GENERAL CONTRACTOR SHALL COORDINATE ARCHITECTURAL, MECHANICAL, AND ELECTRICAL DRAWINGS FOR ANCHORED, EMBEDDED, SUPPORTED ITEMS WHICH AFFECT THE STRUCTURAL DRAWINGS AND NOTIFY THE ARCHITECT/ENGINEER OF ANY DISCREPANCIES.

G6 ATTACHMENT OF GLAZING AND DOORS TO BE PER DADE COUNTY NOA

G7 NO PAPER SHOP DRAWINGS WILL BE REVIEWED BY THIS OFFICE. ALL SUBMITTALS MUST BE IN ELECTRONIC FORM. SIGNED AND SEALED PAPER SHOP DRAWINGS WILL BE STAMPED BY THIS OFFICE AFTER ALL COMMENTS HAVE BEEN INCORPORATED INTO THE DRAWINGS AND CALCULATIONS.

SLAB ON GRADE

SG1 UNLESS NOTED OTHERWISE IN THE GEOTECHNICAL REPORT REFERENCED ABOVE COMPACT INTERIOR FILL TO 95% OF MODIFIED PROCTOR MAXIMUM DRY DENSITY (ASTM D1557). SOIL COMPACTION SHALL BE FIELD CONTROLLED BY REPRESENTATIVE TECHNICIAN OF QUALIFIED LABORATORY. EACH LAYER OF FILL SHALL NOT EXCEED 12" THICK AND SHALL BE COMPACTED PRIOR TO PLACEMENT OF NEXT LAYER.

SG2 MINIMUM PLACEMENT OF CONTROL JOINTS SHALL BE AS SET IN THE TABLE BELOW. JOINTS OCCUR IN EACH DIRECTION.

SLAB THK IN.	COLUMN SPACING (FT.)			
	15' OR LESS	15'-1" TO 32'-0"	32'-1" TO 48'-0"	48'-1" TO 60'-0"
4"	AT COL. GRID	AT COL. GRID & 1/2 WAY BTWN (2 EQ)	AT COL. GRID & @ 1/3 POINTS (3 EQ.)	AT COL. GRID & @ 1/4 POINTS (4 EQ.)
5"	AT COL. GRID	AT COL. GRID & 1/2 WAY BTWN (2 EQ)	AT COL. GRID & 1/2 WAY BTWN (2 EQ)	AT COL. GRID & @ 1/3 POINTS (3 EQ.)
6"	AT COL. GRID	AT COL. GRID & 1/2 WAY BTWN (2 EQ)	AT COL. GRID & 1/2 WAY BTWN (2 EQ)	AT COL. GRID & @ 1/3 POINTS (3 EQ.)

CONCRETE AND REINFORCING

C1 CONCRETE WORK SHALL CONFORM TO ACI CODE REQUIREMENTS FOR REINFORCED CONCRETE (ACI 318-05)

C2 ALL CONCRETE SHALL HAVE A MINIMUM 28 DAY STRENGTH & PROPERTIES AS FOLLOWS:

		SLUMP	MAX. WATER/CMT
FOUNDATIONS SLAB ON GRADE	3000 PSI	6±1"	0.58
TILT PANELS	4000 PSI	5±1"	0.54
ELEVATED SLAB	3500 PSI	5±1"	0.54

C3 CONCRETE MIX DESIGN SUBMITTALS MUST INCLUDE THE AREA IN WHICH THE CONCRETE IS TO BE PLACED (e.g. FOUNDATIONS, SLAB-ON-GRADE, FILLED CELLS, COLUMNS, etc.). FAILURE TO DO SO WILL CAUSE DELAY AND/OR REJECTION OF SUBMITTALS.

C4 REBARS SHALL CONFORM TO ASTM-615 GRADE 60. WELDED WIRE FABRIC SHALL CONFORM TO ASTM A-185.

C5 MINIMUM COVER FOR REINFORCING SHALL BE AS FOLLOWS UNLESS OTHERWISE NOTED.

FOOTINGS	3"
SLABS ON GRADE	1 1/2" FROM TOP
BEAMS	1 1/2" (ON TIES)
COLUMNS	1 1/2" (ON TIES)

C6 SPLICES AND ANCHORAGE OF REINFORCING SHALL BE AS FOLLOWS UNLESS OTHERWISE NOTED.
WELDED WIRE FABRIC 6"
ALL OTHER 38 DIA. (12" MIN)

C7 REINFORCEMENT IN WALLS, FOOTINGS AND BEAMS SHALL BE CONTINUOUS AND LAPPED AS SHOWN ON NOTE M11. HOOK AND LAP ALL CORNER AND INTERSECTING BARS. (SEE TYPICAL DETAILS)

C8 TERMINATE ALL DISCONTINUED ELEVATED SLAB TOP BARS WITH A 180 DEGREE STANDARD HOOK UNLESS OTHERWISE NOTED.

C9 CONTINUOUS TOP BARS SHALL BE SPLICED AT MIDSPAN. CONTINUOUS BOTTOM BARS SHALL BE SPLICED AT CENTER-LINE OF SUPPORTS (OR AS SHOWN ON TYPICAL DETAILS).

C10 AT CHANGES IN DIRECTION OF CONCRETE WALLS, STRIP FOOTINGS AND GRADE BEAMS PROVIDE CORNER BARS AT SAME SIZE AND SPACING AS HORIZONTAL BARS. (REFER TO 8/S4.0)

EXPANSION ANCHORS

EA1. CARBON STEEL EXPANSION ANCHORS SHALL HAVE A ONE PIECE ANCHOR BODY WITH A LENGTH IDENTIFICATION CODE. THE ANCHORS SHALL HAVE AN EXPANSION MECHANISM WHICH CONSISTS OF A PAIR OF INTERLOCKING INDEPENDENT WEDGES. CARBON STEEL COMPONENTS SHALL BE PLATED ACCORDING TO ASTM SPECIFICATION B 633. EXPANSION ANCHORS MUST MEET THE DESCRIPTION IN FEDERAL SPECIFICATION FF-S-325 FOR CONCRETE EXPANSION ANCHORS.

EA2. EXPANSION ANCHORS SHALL BE INSTALLED PER MANUFACTURERS RECOMMENDATIONS.

EA3. EXPANSION ANCHORS SHALL HAVE A MINIMUM ULTIMATE TENSILE AND SHEAR LOADS (LBS) AS SHOWN IN SCHEDULE BELOW:

DIA.	EMBEDMENT (IN)	f'c=3,000 psi TENSILE	f'c=3,000 psi SHEAR	f'c=4,000 psi TENSILE	f'c=4,000 psi SHEAR	INSTALLATION TORQUE (ft/lbs)
1/2"	2 1/4"	4925	7360	5450	7360	65
	3 1/2"	8000	9200	9000	9200	
	6"	8650	9200	9500	9200	
5/8"	2 3/4"	7000	11500	8000	11500	110
	4"	10670	14200	12350	14200	
	7"	13000	14200	14000	14200	
3/4"	3 1/4"	8700	15500	10000	15500	235
	4 3/4"	15500	19200	18000	19200	
	8"	18500	19200	22000	19200	
1"	4 1/2"	15200	28500	17500	30500	450
	6"	22500	34500	28500	34500	
	9"	28750	34500	32500	34500	

STRUCTURAL STEEL

SS1 GENERAL CONTRACTOR SHALL ENGAGE A CERTIFIED TESTING AGENCY TO PERFORM INDUSTRY STANDARD INSPECTIONS TO ENSURE CONFORMANCE WITH PLANS AND SPECIFICATIONS (IF PROVIDED). SUBMIT REPORTS TO ARCHITECT AND ENGINEER.

SS2 STEEL WORK SHALL CONFORM TO THE AISC "SPECIFICATIONS" FOR THE DESIGN, FABRICATION AND ERECTION OF STRUCTURAL STEEL BUILDINGS", LATEST EDITION.

SS3 STEEL TUBING SHALL CONFORM TO ASTM A500 GRADE B.

SS4 STRUCTURAL WF SHAPES SHALL BE TO ASTM A572 Fy=50KSI, UNLESS NOTED OTHERWISE. ALL OTHER SHAPES SHALL BE A36. ALL STRUCTURAL STEEL SHALL BE DOMESTICALLY PRODUCED.

SS5 BRACE AND MAINTAIN ALL STEEL IN ALIGNMENT UNTIL OTHER PARTS OF CONSTRUCTION NECESSARY FOR PERMANENT SUPPORT ARE COMPLETED. CONTRACTOR SHALL BE RESPONSIBLE FOR INSTALLING TEMPORARY SHORING AS REQUIRED FOR THE STABILITY OF THE STEEL FRAME UNTIL ALL STRUCTURAL ELEMENTS HAVE BEEN COMPLETED AND BUILDING IS ENCLOSED.

SS6 ALL WELDING SHALL CONFORM TO THE REQUIREMENTS OF "THE STANDARD CODE FOR WELDING IN BUILDING CONSTRUCTION" OF THE AMERICAN WELDING SOCIETY. WELDING ELECTRODES SHALL BE E70XX-LOW HYDROGEN FOR SHIELD AND METAL ARC WELDING.

SS7 GROUT FOR COLUMN BASE PLATES AND PRESET BEARING PLATES SHALL BE NON-SHRINK, NON-METALLIC GROUT. (5000 PSI MIN)

SS8 SUBMIT SHOP DRAWINGS INDICATING ALL SHOP AND ERECTION DETAILS INCLUDING PROFILES, SIZES, SPACING AND LOCATIONS OF STRUCTURAL MEMBERS, CONNECTION ATTACHMENTS, FASTENERS, LOADS AND TOLERANCES.

SS9 ALL WELDED CONN. SHALL BE 1/4" FILLET ALL AROUND, UNO. ALL BOLTED CONN. SHALL BE 3/4"ø A325 BOLTS, UNO.

SS10 STEEL PAN STAIRS SHALL BE DESIGNED BY THE FABRICATOR AND SHOP DRAWINGS SHALL BE SIGNED AND SEALED BY AN ENGINEER REGISTERED IN THE SAME STATE AS PROJECT LOCATION. DESIGN FOR 100 PSF LIVE LOAD.

SS11 ALL STEEL EXPOSED TO WEATHER SHALL HAVE ZINC RICH PRIMER

TILT UP PANELS

TU1 ALL PANELS ARE VIEWED FROM THE INSIDE.

TU2 PANEL THICKNESS SHALL BE AS INDICATED ON PLANS. SPECIAL ATTENTION MUST BE GIVEN THE LOCATION AND PLACEMENT OF THE REINFORCING.

TU3 REFER TO THE ARCHITECTURAL DRAWINGS FOR FINISH REQUIREMENTS, CHAMFERS, REVEALS, ETC.

TU4 PANELS SHALL NOT BE LIFTED UNTIL CONCRETE HAS ATTAINED THE MINIMUM MODULUS OF RUPTURE AND COMPRESSIVE STRENGTH AS REQ'D BY LIFTING ENGINEER.

TU5 THE CONTRACTOR SHALL PROVIDE DESIGN FOR THE LIFT INSERTS AND ANY ADDITIONAL REINFORCING STEEL REQUIRED FOR THE LIFTING OPERATION. HOWEVER NO ADDITIONAL REINFORCING SHALL BE ADDED WITHOUT THE EXPRESSED APPROVAL OF THE ENGINEER. THE DESIGNERS OF THE LIFTING INSERTS MUST CONSIDER THE REINFORCING ALREADY PRESENT IN THE PANELS AS INDICATED IN THIS SET OF CONSTRUCTION DWGS.

TU6 THE CONTRACTOR SHALL CHECK ALL PANEL DIMENSIONS, PLATE LOCATIONS AND DETERMINE THE LOCATIONS OF ALL OPENINGS REQUIRED. NO PANEL WORK SHALL BE PERFORMED WITHOUT CONTRACTORS APPROVAL OF ALL OF THE ABOVE. THE CONTRACTOR IS INDICATING THAT HE HAS REVIEWED THE ABOVE AND APPROVES THE PANEL DRAWINGS FOR ACCURACY BY THE COMMENCEMENT OF PANEL CONSTRUCTION EVEN IF FORMAL STAMPED APPROVAL HAS NOT BEEN INDICATED ON THOSE DRAWINGS.

TU7 MISCELLANEOUS OPENINGS MAY BE REQUIRED FOR FIRE LINES, PLUMBING, SANITARY LINES, ELECTRICAL CONDUITS, ETC. CORE DRILLING AFTER ERECTION OF THE PANELS MUST HAVE THE APPROVAL OF THE ARCHITECT AND ENGINEER PRIOR TO PERFORMANCE OF THE WORK.

TU8 THE REINFORCING STEEL SUPPLIER SHALL PROVIDE SHOP DWGS INDICATING ALL THE NECESSARY INFORMATION REQUIRED TO ACCURATELY POSITION THE REBAR AS INDICATED. ENSURE CHAIRS, BOLSTERS OR OTHER MEANS OF SUPPORTING REBARS ARE PROVIDED AND ACCURATELY DETAILED.

STEEL JOISTS

SJ1 GENERAL CONTRACTOR SHALL ENGAGE A CERTIFIED TESTING AGENCY TO PERFORM INDUSTRY STANDARD INSPECTIONS TO ENSURE CONFORMANCE WITH PLANS AND SPECIFICATIONS (IF PROVIDED). SUBMIT REPORTS TO ARCHITECT AND ENGINEER.

SJ2 ALL DESIGN, FABRICATION AND ERECTION OF STEEL JOISTS AND BRIDGING SHALL BE IN STRICT ACCORDANCE WITH THE CURRENT SPECIFICATIONS OF STEEL JOIST INSTITUTE AND RECOMMENDED CODE OF STANDARD PRACTICE.

SJ3 THE ENDS OF ALL BRIDGING LINES TERMINATING AT WALLS OR BEAMS SHALL BE ANCHORED TO THE WALL OR BEAM.

SJ4 ALL STEEL JOISTS ARE TO BE CAMBERED AS SPECIFIED BY SJI.

SJ5 PROVIDE BOTTOM AND/OR TOP CHORD EXTENSIONS AS SHOWN ON DRAWINGS.

SJ6 UNLESS NOTED OTHERWISE, MINIMUM JOIST BEARING SHALL BE 2 1/2" ON A STEEL MEMBER OR EMBED PLATE.

SJ7 BRIDGING SHALL BE FURNISHED AND INSTALLED TO MEET THE SIZE AND SPACING REQUIREMENTS OF THE SJI STANDARD SPECIFICATIONS FOR OPEN WEB STEEL JOISTS. ALL BRIDGING AND BRIDGING ANCHORS SHALL BE COMPLETELY INSTALLED BEFORE CONSTRUCTION LOADS ARE PLACED ON THE JOISTS. THE LAST TWO JOIST SPACES IN A LINE OF BRIDGING SHALL BE "X" TYPE. ALL JOISTS 40'-0" OR LONGER REQUIRE A ROW OF BOLTED BRIDGING TO BE IN PLACE BEFORE SLACKENING OF HOISTING LINES. OTHER JOISTS REQUIRE SIMILAR BRIDGING CONSULT LATEST SJI SPECIFICATIONS.

SJ8 ALL HANGERS TO SUPPORT MECHANICAL EQUIPMENT, ETC. TO BE SUPPORTED BY THE BOTTOM CHORD OF JOISTS SHALL BE LOCATED AT THE PANEL POINT OF THE JOIST. IF HANGERS MUST BE LOCATED BETWEEN PANEL POINTS, PROVIDE JOIST STIFFENERS. L1 1/2 x 1 1/2 x 3/16 JOIST STIFFENERS MUST BE INSTALLED FROM HANGER TO OPPOSITE CHORD PANEL POINT BEFORE LOAD IS APPLIED.

SJ9 CONTRACTOR TO FURNISH BAR JOIST CERTIFICATIONS SIGNED AND SEALED BY AN ENGINEER REGISTERED IN THE SAME STATE AS THE PROJECT LOCATION.

SJ10 FOR NET UPLIFT SEE NET UPLIFT PLAN ON SHEET S2.2 PROVIDE UPLIFT BRIDGING.

SJ11 ALL SPRINKLER AND ROOF DRAIN PIPES MUST BE SUPPORTED NO FURTHER THAN 3" FROM THE JOIST TOP CHORD PANEL POINTS. THIS WILL BE STRICTLY ENFORCED. WHEN PIPES ARE PERPENDICULAR TO JOISTS, HANGERS SHALL BE PROVIDED EVERY OTHER JOIST (APPROX 10'-0" OC). WHEN PIPES ARE PARALLEL TO JOISTS, TWO CASES EXIST. FIRST, PIPES THAT ARE 4" AND LESS MAY BE SUPPORTED BY A SINGLE JOIST WITH HANGERS NOT TO EXCEED 10'-0" OC. SECOND, PIPES THAT ARE LARGER THAN 4" MUST BE CENTERED BETWEEN TWO JOISTS AND SUPPORTED FROM L4x4x5/16 ANGLE BEARING ON JOIST TOP CHORD PANEL POINTS WITH SPACING NOT TO EXCEED 10'-0" OC. GENERAL CONTRACTOR SHALL COORDINATE THESE REQUIREMENTS WITH THE APPROPRIATE TRADES.

SJ12 ALL ITEMS SUSPENDED FROM JOISTS (i.e. CATWALKS, BALCONIES, OPERABLE PARTITIONS, etc...) SHALL BE INSTALLED AFTER DEAD LOAD HAS BEEN APPLIED.

METAL DECKING

MD1 ROOF DECKING SHALL CONFORM TO THE REQUIREMENTS OF THE STEEL DECK INSTITUTE AND SHALL BE 1.5" TYPE "B" GALV. G90, METAL ROOF DECK. REFER TO ROOF PLAN FOR DECK GAGE.

MD2 UNLESS OTHERWISE NOTED ON ROOF FRAMIN PLAN, ATTACH METAL ROOF DECK USING 5/8"ø PUDDLE WELDS IN ACCORDANCE WITH SDI PATTERN 36/5 AT ALL SUPPORTS. USE (4) #10 TEKS SIDELAP SCREW FASTENERS, EQUALLY SPACED BETWEEN SUPPORTS.

MD3 FRAME ALL ROOF OPENINGS LARGER THAN 12 SQUARE INCHES WITH STEEL FRAMING. (L 2 1/2"x2 1/2"x1/4" TYPICAL)

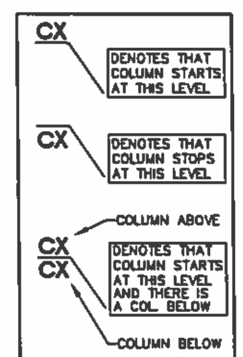

COLUMN CALLOUT

SYMBOL LEGEND

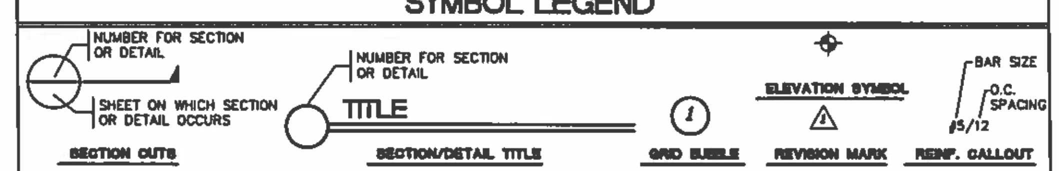

STRUCTURAL ABBREVIATIONS

AB	ANCHOR BOLT
ABV	ABOVE
A.C.I.	AMERICAN CONCRETE INSTITUTE
ADD'L	ADDITIONAL
AFF	ABOVE FINISH FLOOR
AGGR	AGGREGATE
A.I.S.C.	AMERICAN INSTITUTE OF STEEL CONSTRUCTION
A.I.S.I.	AMERICAN IRON AND STEEL INSTITUTE
AL	ALUMINUM
ALT	ALTERNATE
ARCH	ARCHITECT(URAL)
A.S.T.M.	AMERICAN SOCIETY OF TESTING MATERIALS
A.W.S.	AMERICAN WELDING SOCIETY
B/	BOTTOM OF
BB	BOND BEAM
BLDG	BUILDING
BLW	BELOW
BM	BEAM
BOT	BOTTOM
BP	BASE PLATE
BRDG	BRIDGING
BRG	BEARING
BRK	BRICK
BS	BOTH SIDES
BTJ	BOLTED TIE JOIST
BTWN	BETWEEN
C/C	CENTER TO CENTER
CANT	CANTILEVER
CB	CONCRETE BEAM
CC	CONCRETE COL
CIP	CAST IN PLACE
CJ	CONSTRUCTION JOINT OR CONTROL JOINT
CL	CENTERLINE
CLR	CLEAR(ANCE)
CM	CONCRETE MASONRY
CMU	CONCRETE MASONRY UNIT
COL	COLUMN
CONC	CONCRETE
CONN	CONNECTION
CONT	CONTINUOUS
CONTR	CONTRACTOR
CSK	COUNTER SINK
CTR	CENTER
CTR'D	CENTERED
DIA	DIAMETER
DL	DEAD LOAD
DN	DOWN
DTL	DETAIL
DWG	DRAWING
DWL	DOWEL
EA	EACH
EE	EACH END
EF	EACH FACE
EJ	EXPANSION JOINT
ENG	ENGINEER
EL	ELEVATION
EQ	EQUAL
EQ SP	EQUAL SPACE(S) (ING)
ES	EACH SIDE
EW	EACH WAY
EXT	EXTERIOR
F/	FACE OF
FD	FLOOR DRAIN
FDN	FOUNDATION
FIN	FINISH
FL	FLOOR
FLG	FLANGE
FS	FAR SIDE
FT	FOOT
FTG	FOOTING
GA	GAGE, GAUGE
GALV	GALVANIZE
GB	GRADE BEAM
GC	GENERAL CONTRACTOR
GLB	GLU-LAM BEAM
GR	GRADE
HC	HOLLOW CORE
HK	HOOK
HORIZ	HORIZONTAL
HP	HIGH POINT
HS	HEADED STUD
ID	INSIDE DIAMETER
IF	INSIDE FACE
INT	INTERIOR

JST	JOIST
K	KIP
KO	KNOCK OUT
LG	LONG
LL	LIVE LOAD
LLH	LONG LEG HORIZONTAL
LLV	LONG LEG VERTICAL
LNTL	LINTEL
LSL	LONG SLOTTED HOLES
LONG	LONGITUDINAL
LP	LOW POINT
MAS	MASONRY
MAX	MAXIMUM
MBM	METAL BUILDING MFR
MC	MOMENT CONNECTION
MCJ	MASONRY CONTROL JT
MECH	MECHANICAL
MEZZ	MEZZANINE
MFR	MANUFACTURE(ER)
MIN	MINIMUM
MO	MASONRY OPENING
MS	METAL STUD
MTL	METAL
NS	NEAR SIDE
NTS	NOT TO SCALE
OA	OVERALL
OC	ON CENTER
OD	OUTSIDE DIA.
OF	OUTSIDE FACE
OPNG	OPENING
OPP	OPPOSITE
PAF	POWDER ACTUATED FASTENERS
PERP	PERPENDICULAR
PC	PRECAST
PL	PLATE
PLYWD	PLYWOOD
PNL	PANEL
PSF	POUNDS PER SQUARE FOOT
PSI	POUNDS PER SQUARE INCH
PTN	PARTITION
R	RADIUS
REF	REFERENCE
REINF	REINFORCE(D) (ING)
REQ	REQUIRE
REQ'D	REQUIRED
RF	ROOF
RTN	RETURN
RW	RETAINING WALL
SCH	SCHEDULE
SE	SLAB EDGE
SECT	SECTION
SHT	SHEET
SIM	SIMILAR
SJ	SAWCUT JOINT
SJI	STEEL JOIST INSTITUTE
SL	SLOPE
SP	SPACE(S)
SPECS	SPECIFICATIONS
SQ	SQUARE
SS	STAINLESS STEEL
STD	STANDARD
STL	STEEL
STR	STRENGTH
STRL	STRUCTURAL
SW	SHEAR WALL
SYMM	SYMMETRICAL
SYP	SOUTHERN YELLOW PINE
TB	TIE BEAM
T&B	TOP & BOTTOM
TC	TIE COLUMN
TDS	TURN DOWN SLAB
TEMP	TEMPERATURE
THK	THICK
TS	THICKEN SLAB
TOP'G	TOPPING
TYP	TYPICAL
T/	TOP OF
UNO	UNLESS NOTED OTHERWISE
VERT	VERTICAL
WF	WALL FOOTING
WO	WINDOW OPENING (MASONRY)
WP	WORKING POINT
WS	WATERSTOP
WWF	WELDED WIRE FABRIC
W/	WITH

HARVARD•JOLLY
ARCHITECTURE

Ft. Lauderdale 954-486-7910
Ft. Myers 239-275-7774
Jacksonville 904-396-3300
Orlando 407-667-7727
Punta Gorda 941-575-0403
St. Petersburg 727-896-4611
Tampa 813-286-8206
West Palm Beach 561-478-4457
AAC000119
www.HarvardJolly.com

NEW CLASSROOM BUILDING
RIVIERA BEACH, FLORIDA
RIVIERA BEACH, FLORIDA
CONTRUCTION DOCUEMENTS

Comm. No:	JSG# 14101
Date:	09-24-2014
Drawn:	E.B. / S.G.
Revised:	

copyright 2014

Title: STRUCTURAL NOTES
Scale: AS NOTED

S1.0

GENERAL STRUCTURAL NOTES

JOIST BRIDGING NOTES:

JB1 BRIDGING STANDARD WITH THE MANUFACTURER AND COMPLYING WITH THE STEEL JOIST INSTITUTE STANDARD SPECIFICATIONS LOAD TABLES & WEIGHT TABLES OF THE LATEST ADOPTION SHALL BE USED FOR BRIDGING ALL JOISTS FURNISHED BY THE MANUFACTURER. POSITIVE ANCHORAGE SHALL BE PROVIDED AT THE ENDS OF EACH BRIDGING ROW AT BOTH TOP AND BOTTOM CHORDS.

JB2 FOR "K" AND "LH" SERIES JOISTS HORIZONTAL BRIDGING IS RECOMMENDED FOR SPANS UP TO AND INCLUDING 60 FEET EXCEPT WHERE THE STEEL JOIST INSTITUTE STANDARD SPEC LOAD TABLES & WEIGHT TABLES REQUIRE BOLTED DIAGONAL BRIDGING FOR ERECTION STABILITY.

JB3 "LH" AND "DLH" SERIES JOISTS EXCEEDING 60 FEET IN LENGTH SHALL HAVE BOLTED DIAGONAL BRIDGING FOR ALL ROWS.

JB4 REFER TO SJI SECTION 6 IN THE "K" SERIES SPECIFICATIONS AND SECTION 105 IN THE "LH" AND "DLH" SERIES SPECIFICATIONS FOR ERECTION STABILITY REQUIREMENTS

JB5 REFER TO APPENDIX E FOR OSHA STEEL JOIST ERECTION STABILITY REQUIREMENTS.

JB6 HORIZONTAL BRIDGING SHALL CONSISTS OF CONTINUOUS HORIZONTAL STEEL MEMBERS. THE l/r RATIO FOR HORIZONTAL BRIDGING SHALL NOT EXCEED 300.

JB7 DIAGONAL CROSS BRIDGING CONSISTING OF ANGLES OR OTHER SHAPES CONNECTED TO THE TOP AND BOTTOM CHORDS, OF "K", "LH", AND "DLH" SERIES JOISTS SHALL BE USED WHEN REQUIRED BY THE APPLICABLE STEEL JOIST INSTITUTE STANDARD SPECIFCATIONS LOAD TABLES AND WEIGHT TABLES OF LATEST ADOPTION.

JB8 DIAGONAL BRIDGING, WHEN USED, SHALL HAVE AN l/r RATIO < 200.

JB9 WHEN BOLTED DIAGONAL ERECTION BRIDGING IS REQUIRED, THE FOLLOWING SHALL APPLY:
- A. THE BRIDGING SHALL BE INDICATED ON THE JOIST LAYOUT PLAN
- B. THE JOIST LAYOUT PLAN SHALL BE THE EXCLUSIVE INDICATOR FOR THE PROPER PLACEMENT OF THIS BRIDGING.
- C. SHOP INSTALLED BRIDGING CLIPS, OR FUNCTIONAL EQUIVALENT SHALL BE PROVIDED WHERE THE BRIDGING BOLTS TO THE STEEL JOISTS.
- D. WHEN TWO PIECES OF BRIDGING ARE ATTACHED TO THE STEEL JOIST BY A COMMON BOLT, THE NUT THAT SECURES THE FIRST PIECE OF BRIDGING SHALL NOT BE REMOVED FROM THE BOLT FOR THE ATTACHMENT OF THE SECOND PIECE.
- E. BRIDGING ATTACHMENTS SHALL NOT PROTRUDE ABOVE THE TOP CHORD OF THE STEEL JOISTS.

JB10 PROVIDE UPLIFT BRIDGING AT FIRST BOTTOM CHORD PANEL POINT EACH END OF JOIST. REFER TO THIS SHEET FOR UPLIFT BRIDGING CONNECTION DETAILS

JB11 DO NOT WELD BRIDGING TO JOIST WEB MEMBERS. DO NOT HANG ANY MECHANICAL, ELECTRICAL, PLUMBING, ETC FROM BRIDGING

JB12 BRIDGING LEGEND FOR PLAN BELOW:
- (A) HORIZONTAL BRIDGING ATTACHED TO TOP AND BOTTOM CHORD
- (B) BOLTED OR WELDED CROSS BRIDGING AS SHOWN
- (C) SINGLE LINE HORIZONTAL UPLIFT BRIDGING

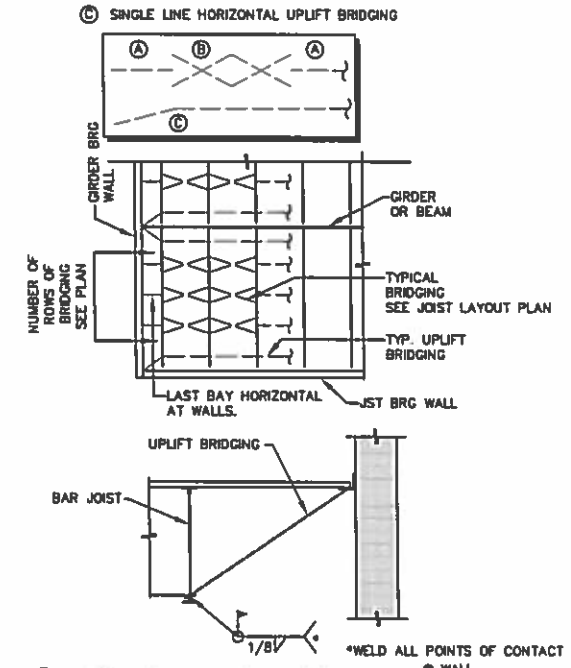

A BRIDGING DETAILS AND PLAN
SCALE: N.T.S.

HARVARD•JOLLY
ARCHITECTURE
Ft. Lauderdale 954-486-7910
Ft. Myers 239-275-7774
Jacksonville 904-396-3300
Orlando 407-422-7272
Punta Gorda 941-575-0403
St. Petersburg 727-896-4611
Tampa 813-286-8200
West Palm Beach 561-478-4457
AA0003119
www.HarvardJolly.com

NEW CLASSROOM BUILDING
RIVIERA BEACH, FLORIDA
RIVIERA BEACH, FLORIDA
CONTRUCTION DOCUEMENTS

Comm. No: JSG# 14101
Date: 09-24-2014
Drawn: E.B. / S.G.
Revised:

copyright 2014

Title: STRUCTURAL NOTES
Scale: AS NOTED

S1.1

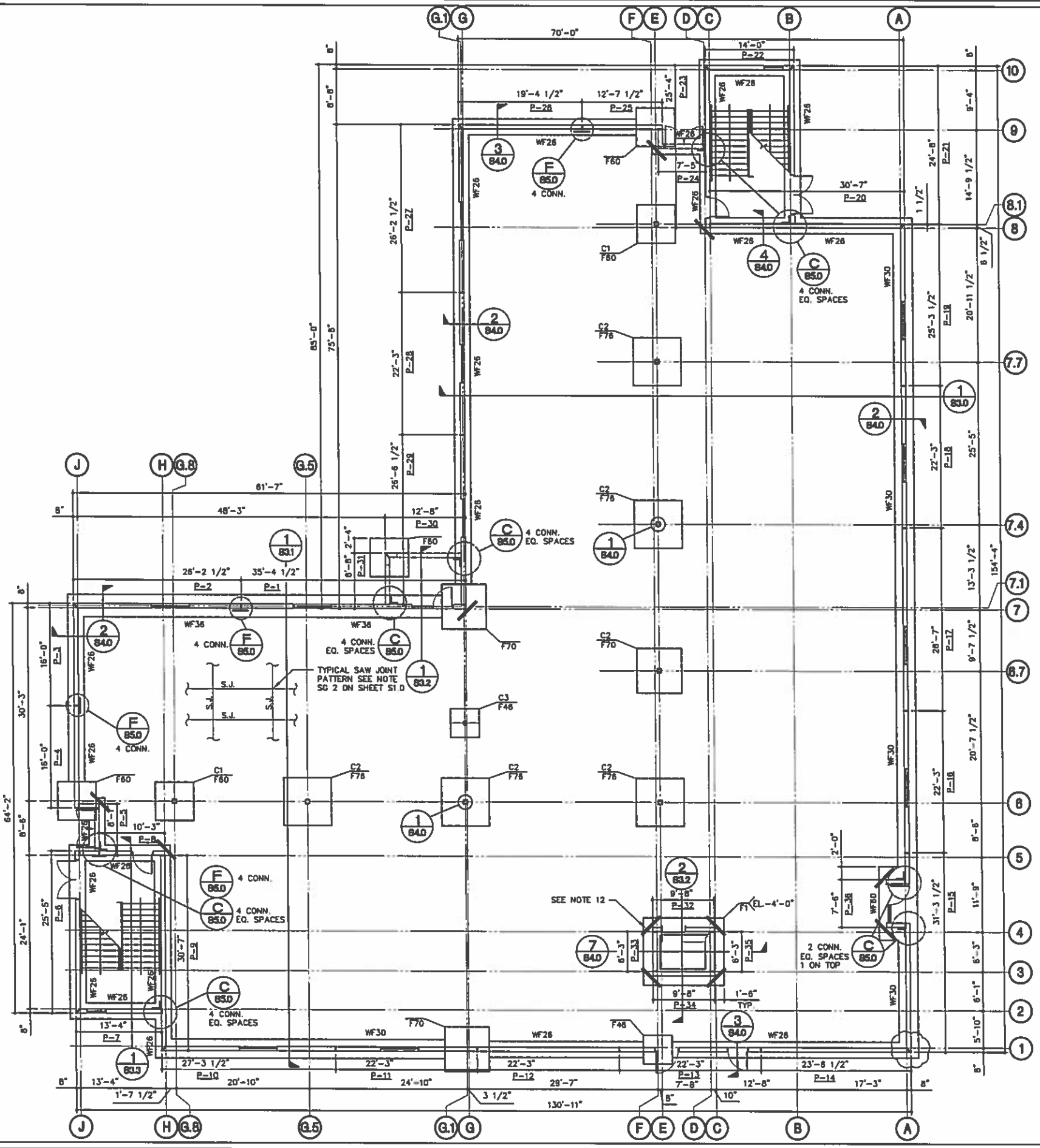

FOUNDATION SCHEDULE

MARK	SIZE (L x W x D)	REINFORCING LONGITUDINAL	REINFORCING TRANSV.	REMARKS
F76	7'-6"x7'-6"x1'-6"	(10) #6 BOTT	(10) #6 BOTT	PAD FTG.
F70	7'-0"x7'-0"x1'-6"	(8) #6 BOTT	(8) #6 BOTT	PAD FTG.
F60	6'-0"x6'-0"x1'-3"	(6) #6 BOTT	(6) #6 BOTT	PAD FTG.
F46	4'-6"x4'-6"x1'-3"	(5) #5 BOTT	(5) #5 BOTT	PAD FTG.
F1	12'-8"x10'-7"x1'-6"	(12) #6 BOTT	(14) #6 BOTT	PAD FTG.
WF60	CONT.x6'-0"x1'-0"	(6) #5 BOTT	#5/8" BOTT	WALL FTG.
WF36	CONT.x3'-6"x1'-0"	(4) #5 BOTT	#5/14" BOTT	WALL FTG.
WF30	CONT.x3'-0"x1'-0"	(4) #5 BOTT	#5/14" BOTT	WALL FTG.
WF26	CONT.x2'-6"x1'-0"	(3) #5 BOTT	#5/16" BOTT	WALL FTG.

DESIGN INFORMATION:

NET ALLOWABLE SOIL BEARING PRESSURE = 3000 PSF

COLUMN / BASE PLATE SCHEDULE

COLUMN MARK	COLUMN SIZE	BASE PLATE A	BASE PLATE B	BASE PLATE T	ANCHOR BOLT E	ANCHOR BOLT D	CAP PLATE	REMARKS
C1	HSS 8x8x3/8"	14"	14"	1"	10"	3/4"		
C2	HSS 8x8x3/8"	14"	14"	1"	13"	3/4"		
C3	HSS 6x6x3/8"	12"	12"	3/4"	10"	3/4"		
C3	HSS 6x6x3/8"	12"	12"	3/4"	10"	3/4"		

NOTE:
ANCHOR BOLTS SHALL BE ASTM A36 (UNO) THREADED EACH END WITH NUT AT BOTTOM, TACK WELDED SECURE. PLATE WASHER AT BOTTOM NUT SHALL NOT BE REQUIRED. CONFORM TO CHART @ RIGHT FOR EMBEDMENT, UNLESS NOTED OTHERWISE IN SCHEDULE ABOVE.

BOLT TYPE, TYPE, MATERIAL	MINIMUM EMBEDDED LENGTH	MINIMUM EMBEDDED EDGE DISTANCE
A307, A36	12d	5d > 4 in.
A325, A449	17d	7d > 4 in.

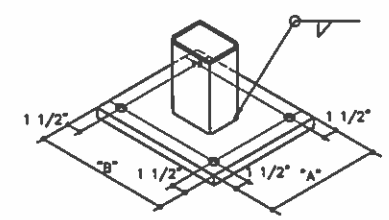

BASE PL DETAIL
NTS

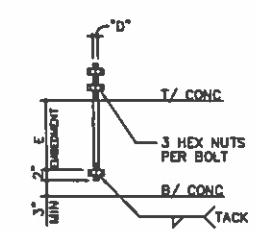

FOUNDATION PLAN NOTES:

1. FLOOR SLAB SHALL BE 5" THICK CONCRETE REINF W/6x6 W2xW2 WWF OVER 15 MIL VAPOR BARRIER ON COMPACTED TERMITE TREATED SUBGRADE. (SEE SLAB ON GRADE DETAILS FOR PLACEMENT OF REINFORCEMENT)
2. T/ SLAB EL =+0'-0", UNO (REFERENCE ONLY) SEE CIVIL FOR ACTUAL ELEVATION
3. T/ WALL FTG. EL. = -1'-3" TYP. U.N.O.
4. T/ STL COL FTG = -2'-0", TYP UNO.
5. ALL TILT UP PANELS ALLOW FOR 3/4" DEEP RECESS. (ie. THICKNESS=STRUCTURAL THICKNESS + 3/4") U.N.O. SEE PANEL REINFORCEMENT SHEETS FOR INDIVIDUAL PANEL THICKNESS.
6. ALL TILT-UP PANELS ARE VIEWED FROM THE INSIDE OF THE BUILDING.
7. STEP FTG WHERE SHOWN AND AS REQUIRED TO AVOID INTERFERENCE W/ OTHER TRADES. SEE STEPPED FOOTING SECTION C/S4.0
8. ALL FTGS ARE CENTERED BENEATH BRG WALLS AND COLS, TYP UNO.
9. SEE SHT S5.0 FOR PANEL REINF., EMBEDDED ITEMS AND JOINT DETAILS.
10. SEE SHT S1.0 FOR GENERAL NOTES.
11. SIDEWALK SLAB = 4" CONCRETE SLAB ON COMPACTED FILL REINFORCED WITH 6x6 W1.4xW1.4 W.W.F., TYP.
12. (2) #4x4'-0" LONG @ 3" O.C. PLACED 2" CLEAR FROM CORNER CENTERED IN SLAB, TYP. AT RE-ENTRANT CORNERS.

FOUNDATION PLAN

SCALE:1/8"=1'-0"

HARVARD • JOLLY
ARCHITECTURE
Ft. Lauderdale 954-646-7910
Ft. Myers 239-275-7774
Jacksonville 904-733-3300
Orlando 407-677-7777
Punta Gorda 941-575-0403
St. Petersburg 727-898-4811
Tampa 813-288-8200
West Palm Beach 561-478-4457
AA0003119
www.HarvardJolly.com

NEW CLASSROOM BUILDING
RIVIERA BEACH, FLORIDA
RIVIERA BEACH, FLORIDA
CONTRUCTION DOCUMENTS

Comm. No: JSG# 14101
Date: 09-24-2014
Drawn: E.B. / S.G.
Revised:

copyright 2014

Title: FOUNDATION PLAN
Scale: 1/8"=1'-0"

S2.0

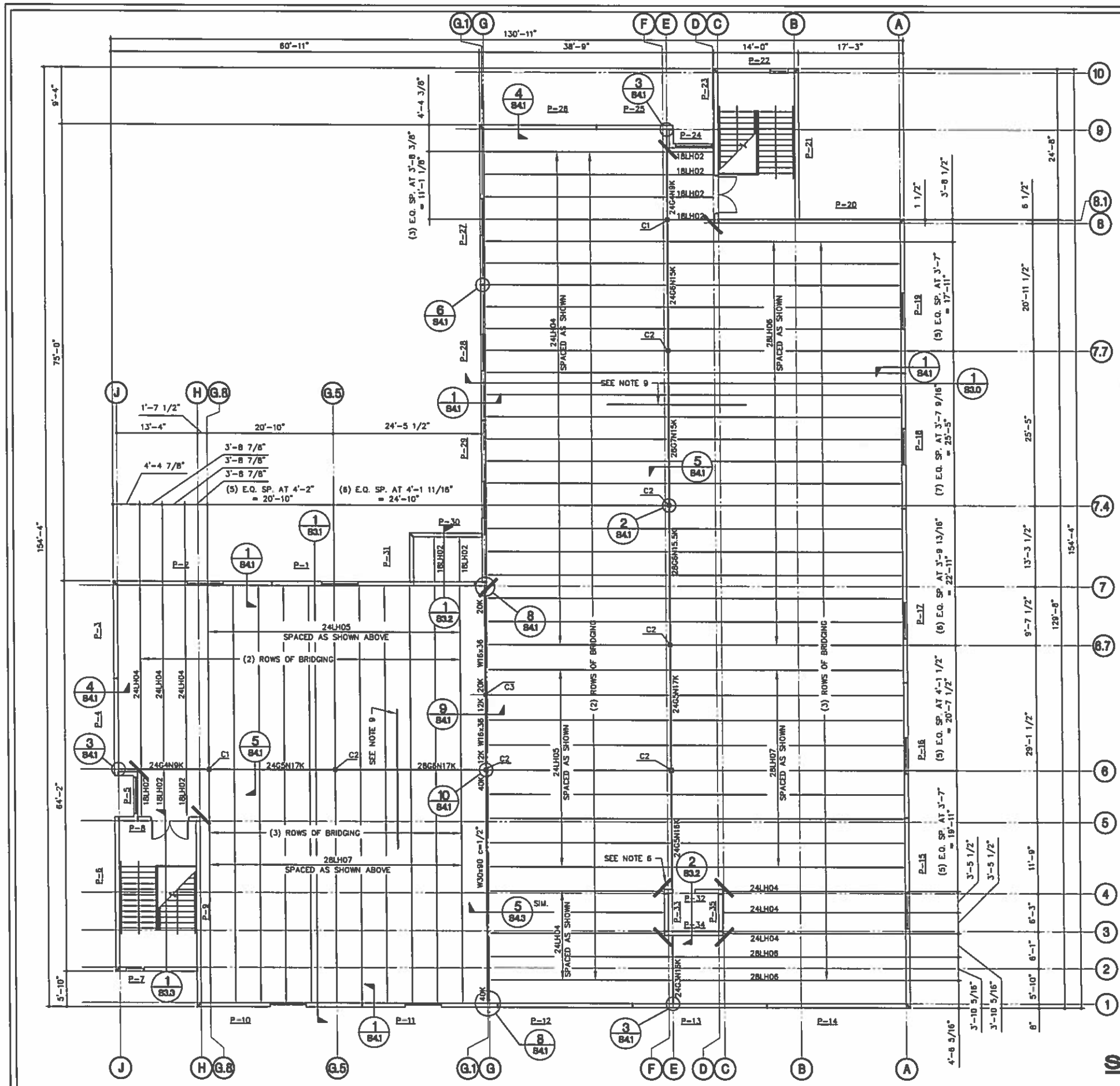

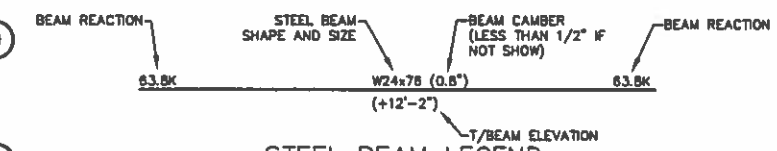

STEEL BEAM LEGEND

FLOOR DESIGN LOADS	
LIVE LOAD	
CLASS ROOM	40 PSF
PARTITIONS	20 PSF
ELEVATOR/CORRIDOR	100 PSF
DEAD LOAD	
SYSTEM WEIGHT	45 PSF
MECH & MISC.	10 PSF

FLOOR FRAMING NOTES:

1. FLOOR SYSTEM SHALL BE 1.0 C. 24GA GALV. CONFORM DECK WITH 3" CONCRETE TOPPING (4" TOTAL THICKNESS) CONTINUOUS OVER (3) OR MORE SPANS. CONCRETE TOPPING SHALL HAVE A MINIMUM OF 3500 PSI COMPRESSIVE STRENGTH.
2. FLOOR SLAB MIX SHALL HAVE 100% VIRGIN POLYPROPYLENE FIBERS AT 1lb. PER CUBIC YARD. FIBERS SHALL BE MANUFACTURED BY FIBER MESH OR W.R. GRACE. (2ND FLOOR ONLY)
3. FLOOR SLAB SHALL BE REINFORCED WITH 4x4 W2.9xW2.9 W.W.F..
4. T/FINISH FLOOR = +14'-0"
   T/STEEL GIRDER BEAMS = +13'-3"
   T/STEEL JOISTS = +13'-8"
5. ATTACH DECK TO ALL SUPPORTS USING WASHER USING SDI 33/4 WELD PATTERN AND (2) #10 SIDE LAP SCREW.
6. (2) #4x4'-0" LONG @ 3" O.C. PLACED 2" CLEAR FROM CORNER CENTERED IN SLAB, TYP. AT RE-ENTRANT CORNERS.
7. ALL STEEL STAIRS TO BE DESIGNED FOR 100 PSF LIVE LOAD. ALL LANDINGS MUST BRACE PANELS. MINIMUM 4" CONCRETE & SEE 4/S4.1.
9. #4 x22'-0" AT 16" O.C. CHAIRED AT SLAB MID DEPTH. TYPICAL AT GIRDER LOCATIONS.
10. BRACE STEEL BEAM BOTTOM FLANGE AT BEAM QUARTER POINTS, SEE SIMILAR 5/S4.3.

SECOND FLOOR PLAN

SCALE:1/8"=1'-0"

HARVARD•JOLLY
ARCHITECTURE
Ft. Lauderdale 954-486-7910
Ft. Myers 239-275-7774
Jacksonville 904-398-3300
Orlando 407-422-7272
Punta Gorda 941-575-0403
St. Petersburg 727-896-4611
Tampa 813-286-8206
West Palm Beach 561-478-4457
AAC000119
www.HarvardJolly.com

NEW CLASSROOM BUILDING
RIVIERA BEACH, FLORIDA
RIVIERA BEACH, FLORIDA
CONTRUCTION DOCUEMENTS

Comm. No: JSG# 14101
Date: 09-24-2014
Drawn: E.B. / S.G.
Revised:

copyright 2014

Title: SECOND FLOOR PLAN
Scale: 1/8"=1'-0"

S2.1

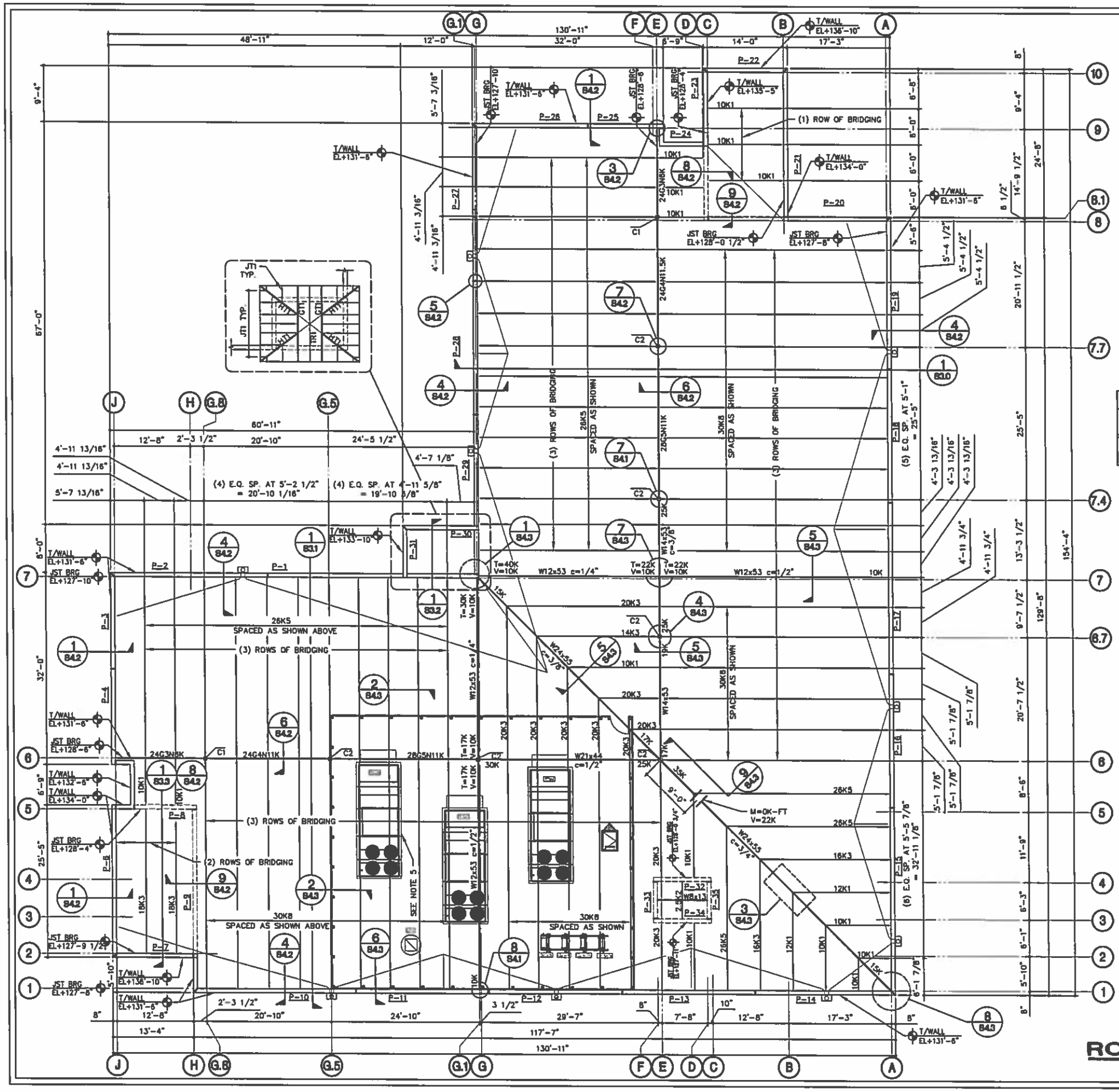

RTU SCHEDULE

UNIT	WEIGHT (LBS)	HEIGHT - (INCHS) (INCLUDING CURB/RACK)
RTU-1	6520	101
RTU-2	6520	101
OAU-1	6520	101
CU 1-16	29	35.6
CU 2-17	46	38.4
CU 1-17A	22	35.6
CU 1-17B	40	38.4
EF-1	138	36

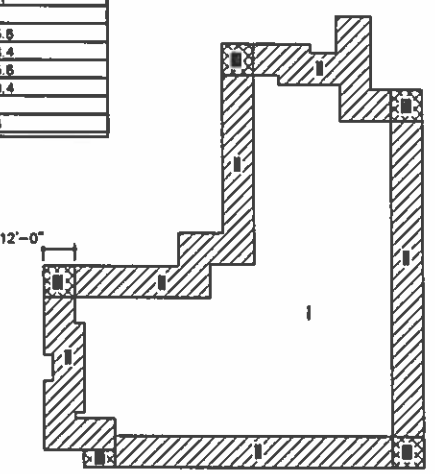

ROOF DESIGN LOADS

TOP CHORD LIVE LOAD	TOP CHORD DEAD LOAD	BOTTOM CHORD DEAD LOAD
30 PSF	25 PSF	5 PSF

ROOF UPLIFT PLAN

ZONE	JOISTS & GIRDERS *	ROOFING
I	-34.9 PSF	-49.1 PSF
II	-43.2 PSF	-82.3 PSF
III	-43.2 PSF	-123.9 PSF

*NET UPLIFT BASED ON 18 PSF DL. ALL LOADS SERVICE.

ROOF TRUSS CONNECTION SCHEDULE

MARK	SIMPSON CONNECTOR	FASTENERS	REACTION (#)	NET UPLIFT REQUIRED (#)	UPLIFT PROVIDED (#)
TR1	HTSM 20	(4) 1/4"x2 1/4" TITEN SCREWS, (8) #10 TEKS	633	-855	-1175
JT1	HTSM 20	(4) 1/4"x2 1/4" TITEN SCREWS, (8) #10 TEKS	483	-740	-1175
HT1	LGT2	(7) 1/4"x2 1/4" TITEN SCREWS, (16) #10 TEKS	976	-1800	-2150
GT1	(2) HTSM 20	(8) 1/4"x2 1/4" TITEN SCREWS, (14) #10 TEKS	1350	-1300	-1340

*ALL LOADS SERVICE

HIGH ROOF FRAMING NOTES:

R1. ALL TRUSSES SHALL BE DESIGNED AND CERTIFIED BY TRUSS MANUFACTURER'S REGISTERED ENGINEER. ALL HANGERS AND ANCHORS SHALL BE SPECIFIED BY A REGISTERED ENGINEER.

R2. TRUSS MANUFACTURER SHALL VERIFY ALL DIMENSIONS AND SUBMIT SHOP DRAWINGS TO ARCHITECT FOR APPROVAL.

R3. SEE PLAN AND SCHEDULE FOR TRUSS HURRICANE CONNECTORS.

R4. METAL TRUSS SPACING SHALL BE AT 24" O.C. (U.N.O.) HAND FRAMING SHALL BE AT 16" O.C. (U.N.O.)

R5. PROVIDE PERMINANT BOTTOM CHORD BRACING AS PER TRUSS MFR. REQUIREMENTS.

R6. ROOF SHEATHING TO BE 1/2", 22ga METAL DECK ON PRE-ENGINEERED METAL ROOF TRUSSES. ATTACH METAL DECK TO TRUSSES WITH #12-14x1 1/4" TEK SCREWS AT 8" O.C. WITH (1) #12 TEK SIDELAP FASTENER BETWEEN EA. TRUSS AT THE SIDELAP. TYP. THROUGHOUT.

R7. PROVIDE 5/8" DENS-DECK BOARD ON TOP OF THE METAL DECK. ATTACH BOARD W/#12-24x2.25" PFH TEK SCREWS @ 16" O.C. AT PANEL EDGES AND @ 24" O.C. AT ALL INTERIOR SUPPORTS. ATTACH PLYWOOD DIRECTLY TO TRUSS TOP CHORD THROUGH METAL DECKING.

ROOF FRAMING NOTES:

1. ROOF ASSEMBLY TO BE BUILT-UP ROOF WITH INSULATION OVER 1.5" TYPE "B" GALV. G60 METAL ROOF DECK CONTINUOUS OVER 3 OR MORE SPANS. ROOF DECK TO BE 22 GAGE. ATTACH DECK TO JOISTS W/ 5/8"ø PUDDLE WELDS AT SDI 36/7 WELD PATTERN. USE (7) #10 TEK SIDELAP FASTENERS. PROVIDE 5/8"ø PUDDLE WELDS @ 6" O.C. AROUND PERIMETER.
2. TOP OF ELEVATOR PANELS IS TOP OF JOIST ALL AROUND. SEE 8 AND 9/S4.2.
3. TOP OF PARAPET EL. VARIES SEE PLAN.
4. SEE STRUCTURAL NOTE SHEET FOR BRIDGING REQUIREMENTS FOR JOIST & JOIST GIRDERS.
5. JOIST MANUFACTURER TO DESIGN ALL JOISTS AND GIRDERS FOR ALL ROOF TOP A/C UNITS. REFER TO MECHANICAL HVAC PLAN FOR LOCATION AND WEIGHTS OF EACH UNIT. LOADS AND LOCATIONS PROVIDED HERE ARE A GUIDE AND SHOULD BE VERIFIED WITH MOST RECENT MECHANICAL PLANS.
6. SEE PLAN FOR JOIST BEARING ELEVATIONS.
7. "BTJ" INDICATES BOLTED TIE JOIST PER OSHA REQUIREMENTS.
8. DENOTES ADDITIONAL CONCENTRATED LOAD AT GIRDER PANEL POINT.
9. SEE A/S1.1 FOR UPLIFT BRIDGING DETAILS. SEE ROOF UPLIFT PLAN THIS SHEET FOR WIND UPLIFT LOADS
10. BRACE STEEL BEAM BOTTOM FLANGE AT BEAM QUARTER POINTS, SEE SIMILAR 5/S4.3.

ROOF FRAMING PLAN

SCALE:1/8"=1'-0"

HARVARD•JOLLY
ARCHITECTURE
Ft. Lauderdale 954-486-7910
Ft. Myers 239-275-7774
Jacksonville 904-399-3300
Orlando 407-422-7272
Punta Gorda 941-575-0403
St. Petersburg 727-896-4511
Tampa 813-286-8206
West Palm Beach 561-478-4457
AA0003119
www.HarvardJolly.com

NEW CLASSROOM BUILDING
RIVIERA BEACH, FLORIDA
RIVIERA BEACH, FLORIDA
CONTRUCTION DOCUEMENTS

Comm. No: JSG# 14101
Date: 09-24-2014
Drawn: E.B. / S.G.
Revised:

copyright 2014

Title: ROOF FRAMING PLAN
Scale: 1/8"=1'-0"

S2.2

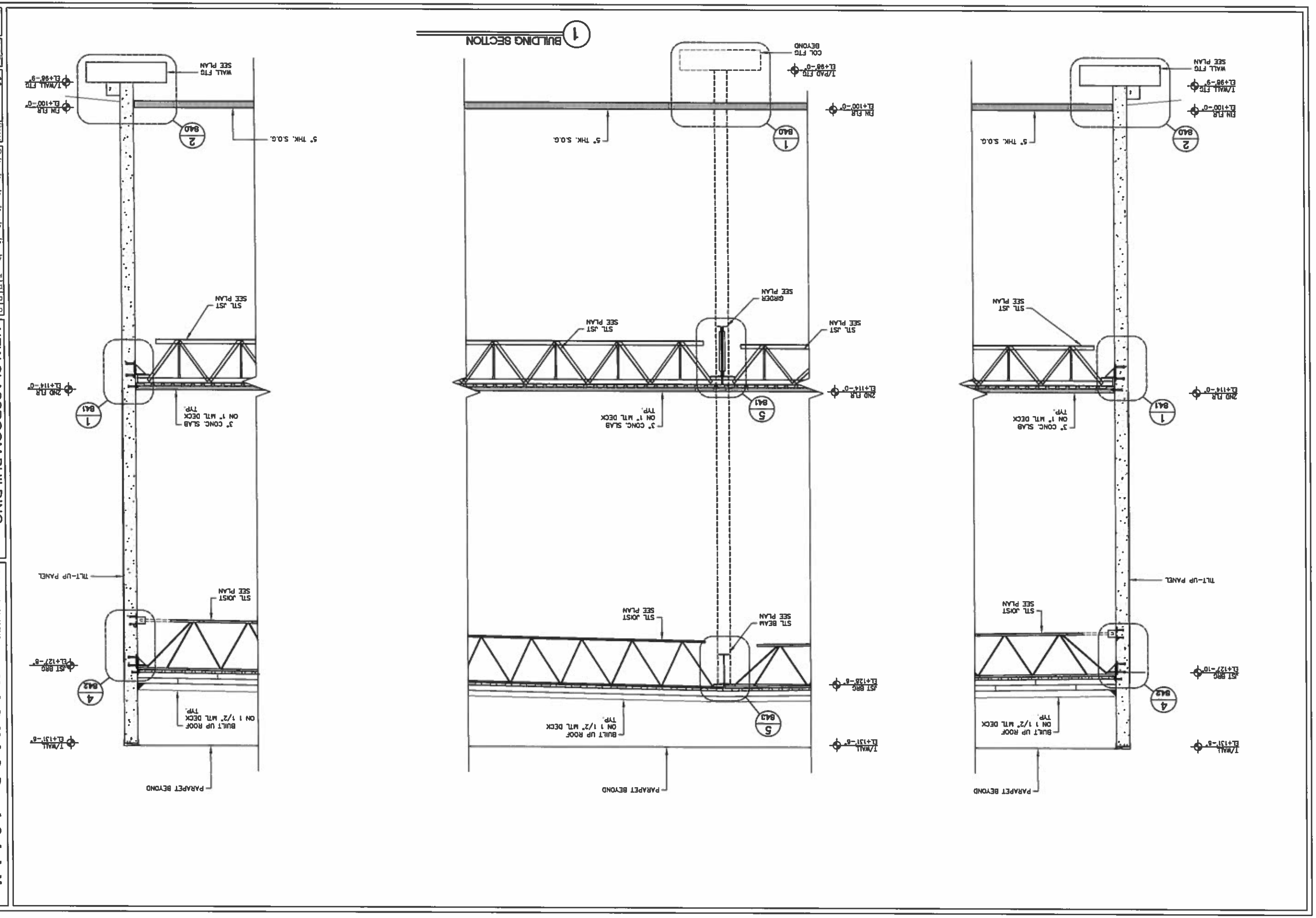

S3.0

STRUCTURAL DETAILS

Scale: 1/2"=1'-0"

Title:

Copyright 2014

Revised:

Drawn: E.B. / S.G.

Date: 09-24-2014

Comm. No: JSG# 14101

NEW CLASSROOM BUILDING
RIVIERA BEACH, FLORIDA
RIVIERA BEACH, FLORIDA
CONTRUCTION DOCUEMENTS

FL Lauderdale 954-486-7910
FL Myers 239-275-7774
Jacksonville 904-396-3300
Orlando 407-667-7727
Punta Gorda 941-575-0403
St. Petersburg 727-896-4811
Tampa 813-286-8206
West Palm Beach 561-478-4457
AAC000119
www.HarvardJolly.com

HARVARD•JOLLY
ARCHITECTURE

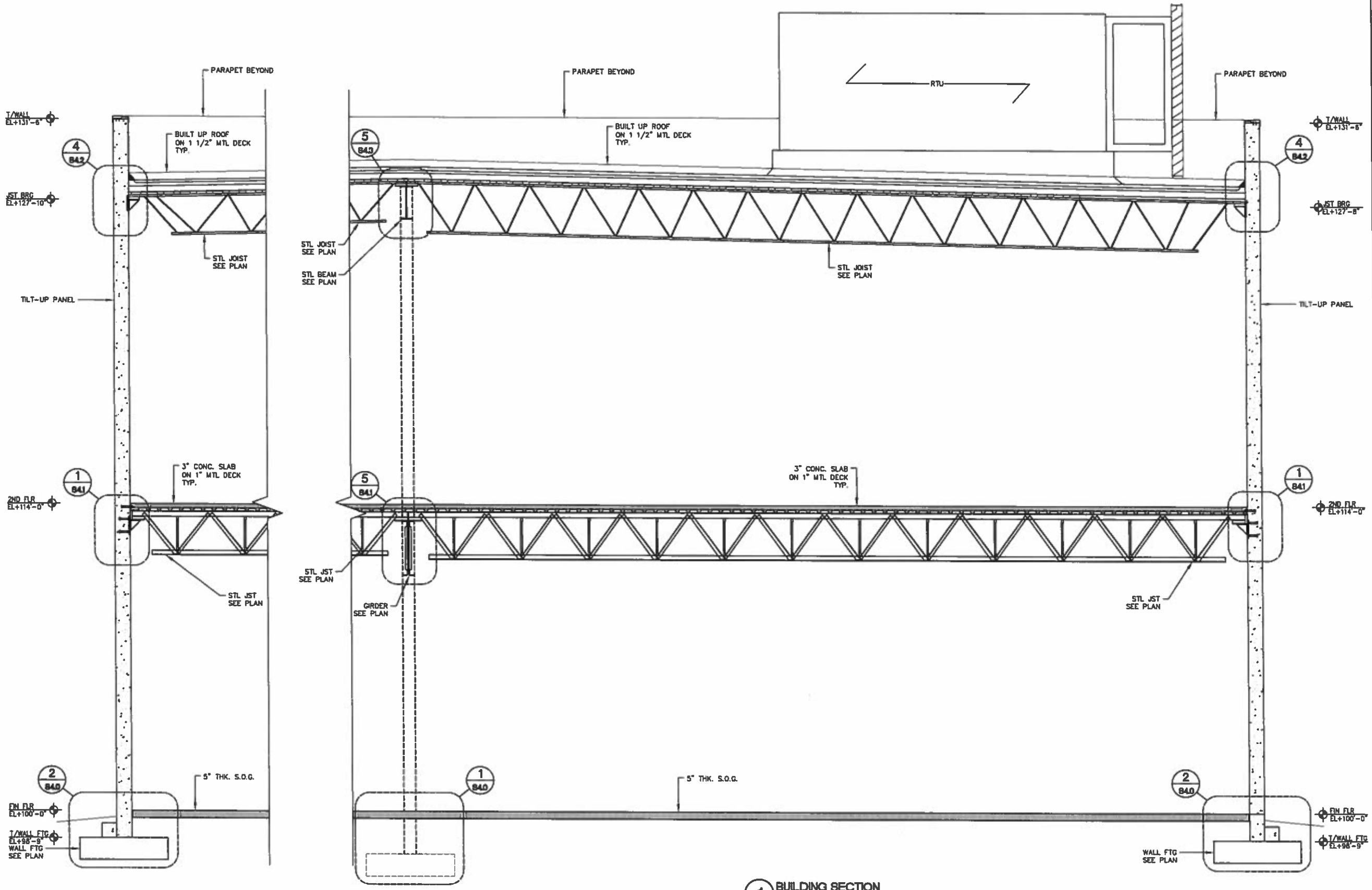

1 BUILDING SECTION

HARVARD•JOLLY
ARCHITECTURE

FL Lauderdale 954-486-7910
FL Myers 239-275-7774
Jacksonville 904-296-3300
Orlando 407-667-7727
Punta Gorda 941-575-0403
St. Petersburg 727-898-4811
Tampa 813-986-8206
West Palm Beach 561-478-4457
AAC000119
www.HarvardJolly.com

NEW CLASSROOM BUILDING
RIVIERA BEACH, FLORIDA
RIVIERA BEACH, FLORIDA
CONTRUCTION DOCUEMENTS

Comm. No: JSG# 14101
Date: 09-24-2014
Drawn: E.B. / S.G.
Revised:

copyright 2014

Title: STRUCTURAL DETAILS
Scale: 1/2"=1'-0"

S3.1

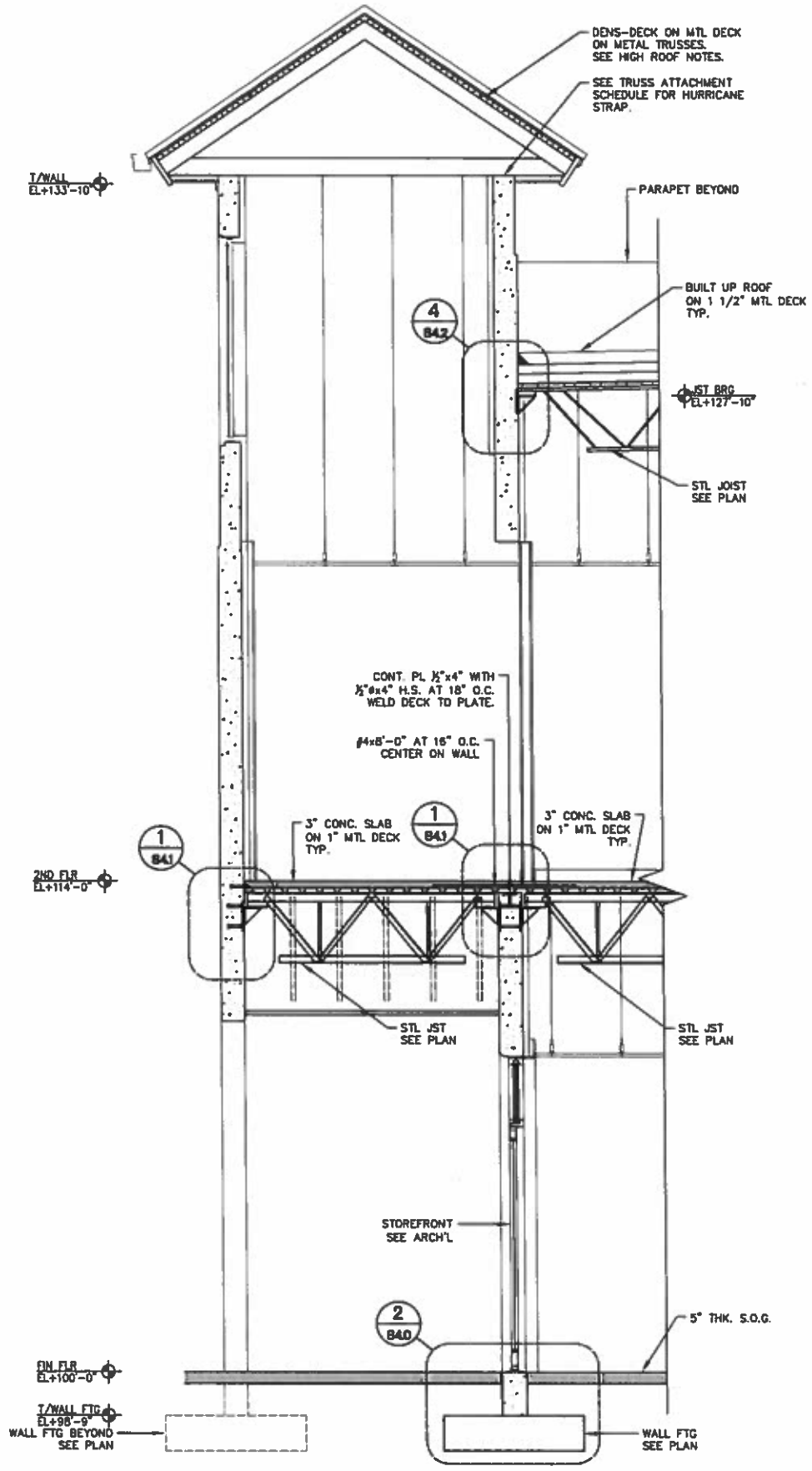

1 WALL SECTION

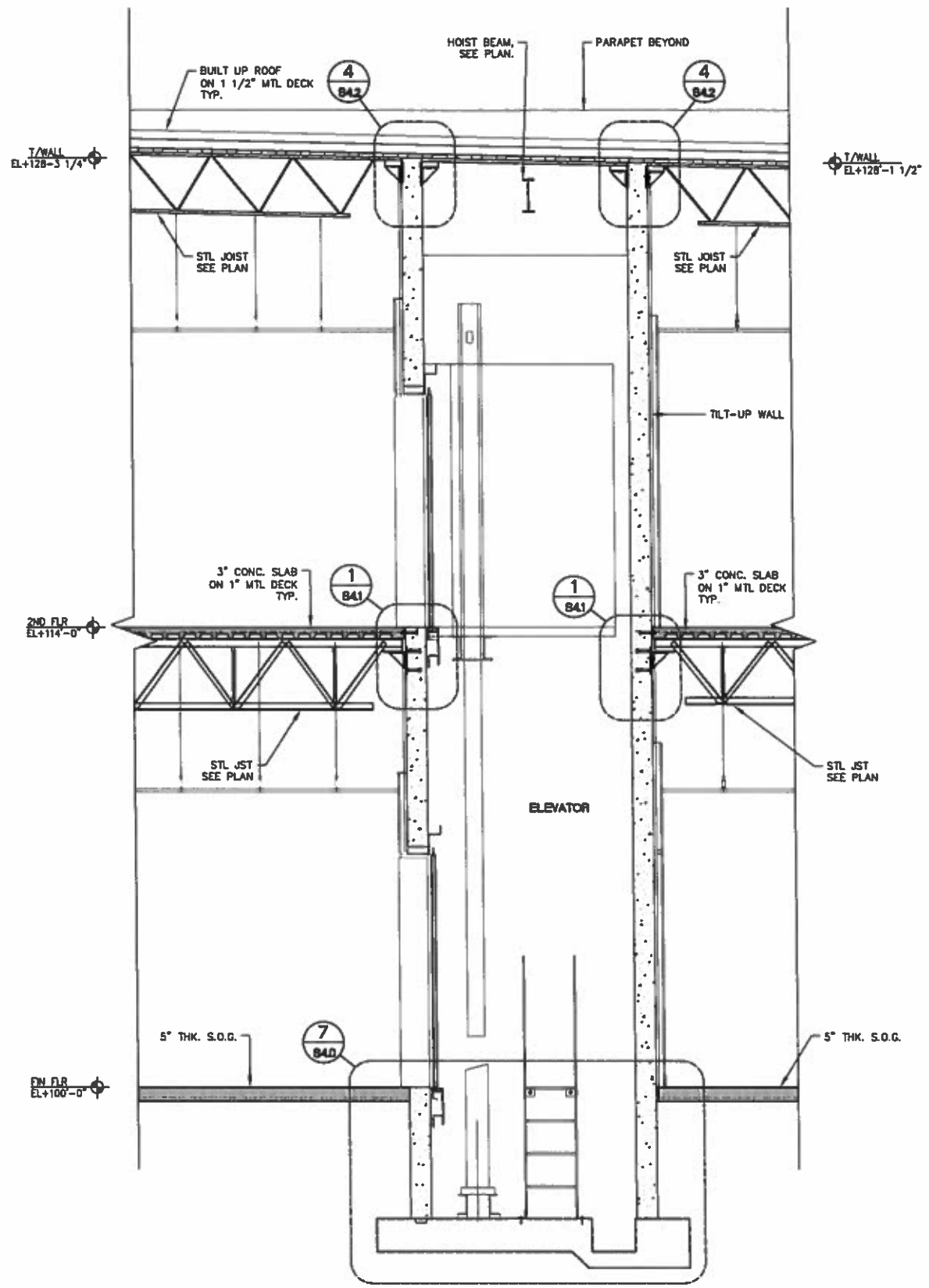

2 WALL SECTION

HARVARD • JOLLY
ARCHITECTURE

Ft. Lauderdale 954-486-7910
Ft. Myers 239-275-7774
Jacksonville 904-292-3000
Orlando 407-897-7777
Punta Gorda 941-575-0403
St. Petersburg 727-866-4611
Tampa 813-248-3038
West Palm Beach 561-478-4457
AA0003119
www.HarvardJolly.com

NEW CLASSROOM BUILDING
RIVIERA BEACH, FLORIDA
RIVIERA BEACH, FLORIDA
CONTRUCTION DOCUEMENTS

Comm. No: JSG# 14101
Date: 09-24-2014
Drawn: E.B. / S.G.
Revised:

copyright 2014

Title: STRUCTURAL DETAILS
Scale: 1/2"=1'-0"

S3.2

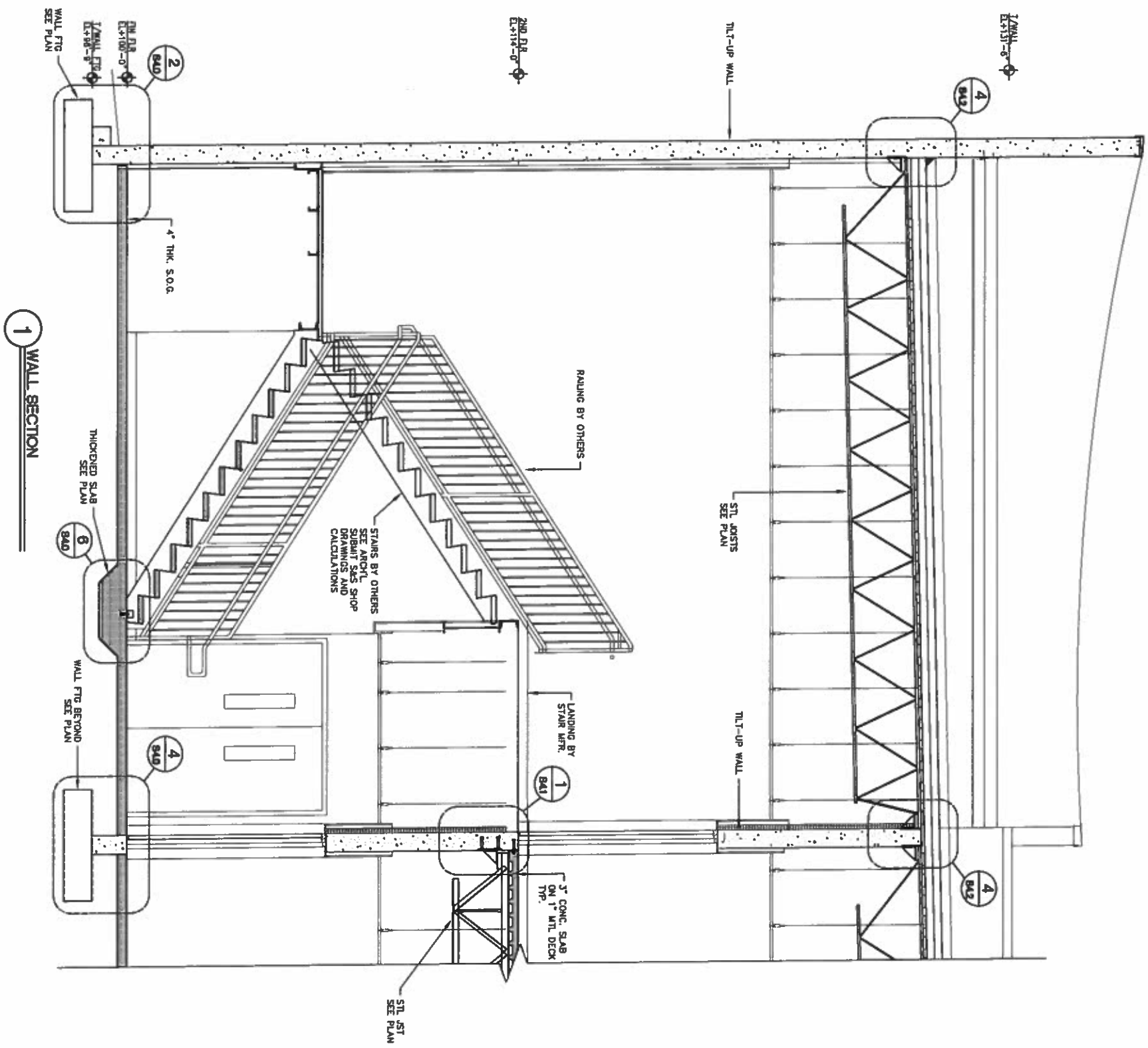

1 WALL SECTION

NEW CLASSROOM BUILDING
RIVIERA BEACH, FLORIDA
RIVIERA BEACH, FLORIDA
CONTRUCTION DOCUEMENTS

Comm. No: JSG# 14101
Date: 09-24-2014
Drawn: E.B. / S.G.
Revised:

copyright 2014

Title: STRUCTURAL DETAILS
Scale: 1/2"=1'-0"

S3.3

Ft. Lauderdale 954-486-7910
Ft. Myers 239-275-7774
Jacksonville 904-396-3300
Orlando 407-667-7727
Punta Gorda 941-575-0403
St. Petersburg 727-896-4611
Tampa 813-286-8208
West Palm Beach 561-478-4457
AAC000119
www.HarvardJolly.com

HARVARD•JOLLY
ARCHITECTURE

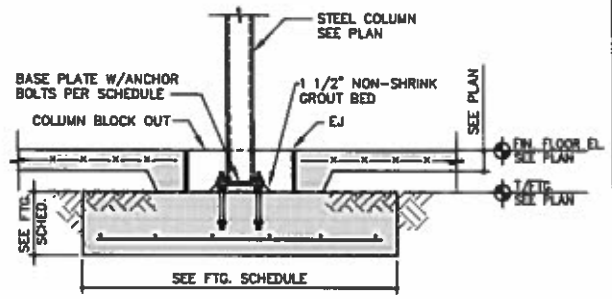

1 INTERIOR COLUMN FOOTING

SCALE: 3/4"=1'-0" TYP. U.N.O.

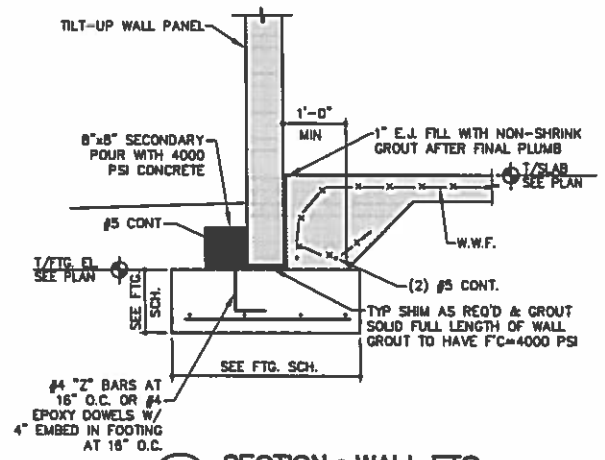

2 SECTION • WALL FTG.

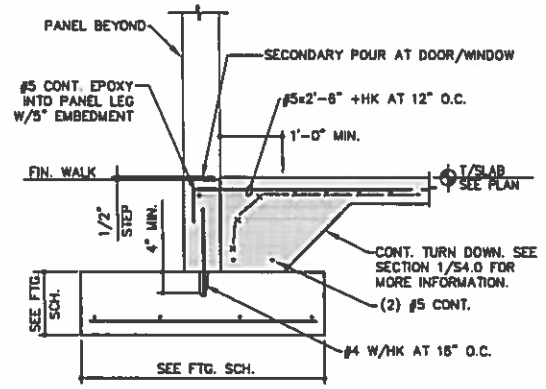

3 SECTION • EXT. DOOR W/TDS

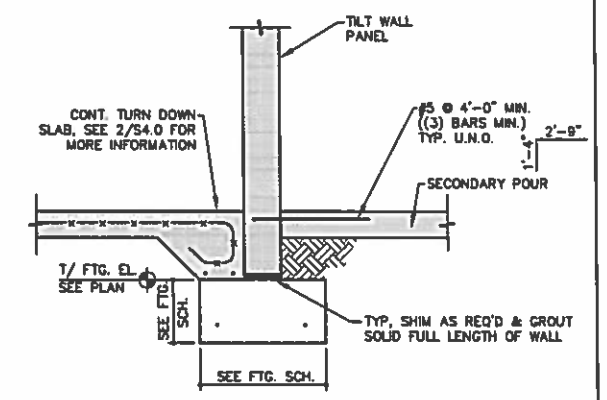

4 INT. TILT WALL DETAIL

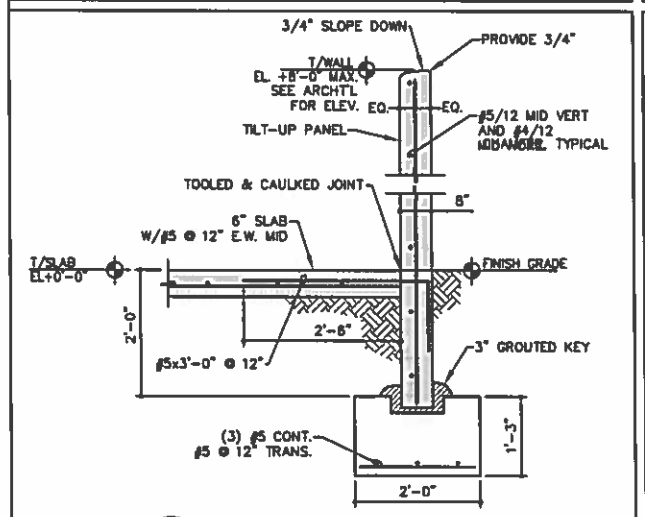

5 SECTION • DUMPSTER

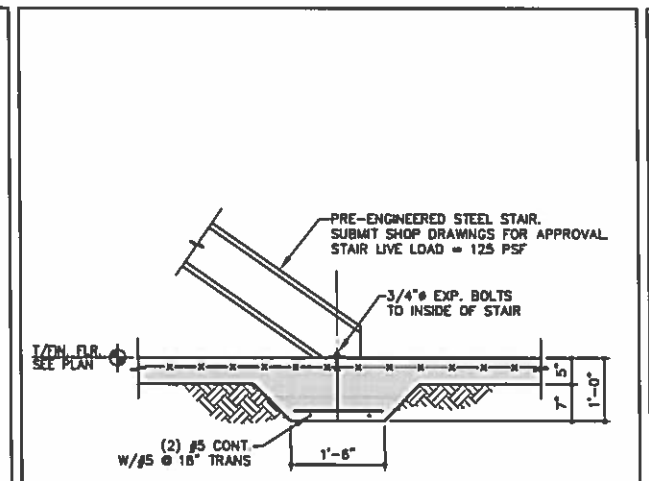

6 SECTION AT STAIR LANDING

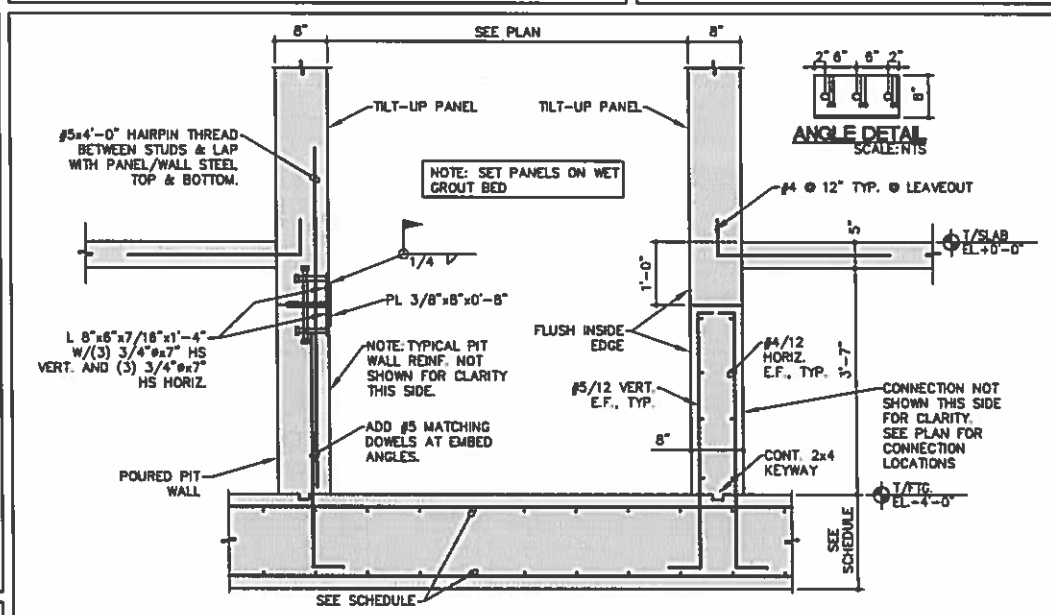

7 SECTION • ELEVATOR PIT

N.T.S.

ANGLE DETAIL

SCALE: N.T.S

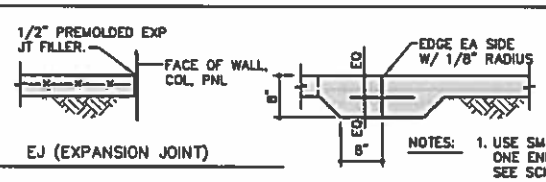

EJ (EXPANSION JOINT)

NOTES:
1. USE SMOOTH DWL COATED ONE END TO PREVENT BOND. SEE SCHEDULE BELOW.
2. REINF NOT SHOWN FOR CLARITY. DISCONTINUE REINF @ JT.

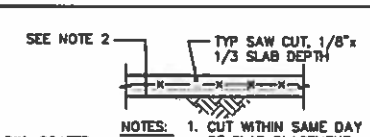

NOTES:
1. CUT WITHIN SAME DAY OF SLAB PLACEMENT.
2. PLACE REINF 1/3 SLAB DEPTH FOR SLABS GREATER THAN 5". 1 1/2" CLR FOR SLABS 5" OR LESS.

SJ (SAWCUT JOINT)

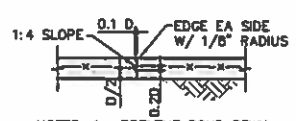

NOTES:
1. PREVENT BOND BTWN SLABS.
2. DISCONTINUE REINF @ JT
3. THIS IS ALTERNATE CJ FROM PREFERRED DOWELLED CJ. USE KEYED CJ ONLY WITH ENGINEERS APPROVAL.

CJ (KEYED CONSTRUCTION JOINT)

SMOOTH DOWEL SCHEDULE

SLAB DEPTH IN	DIAMETER IN	TOTAL LENGTH IN	SPACING C TO C IN
4	1/2	12	12
5	5/8	12	12
6	3/4	14	12
7	7/8	14	12
8	1	14	12
9	1 1/8	16	12
10	1 1/4	16	12

NOTE: DWLS SHALL BE CUT TO LENGTH NOT SHEARED.

CJ (DOWELLED CONSTRUCTION JOINT)

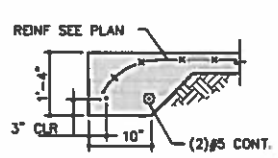

TDS (TURN DOWN SLAB)

A SLAB ON GRADE DEAILS

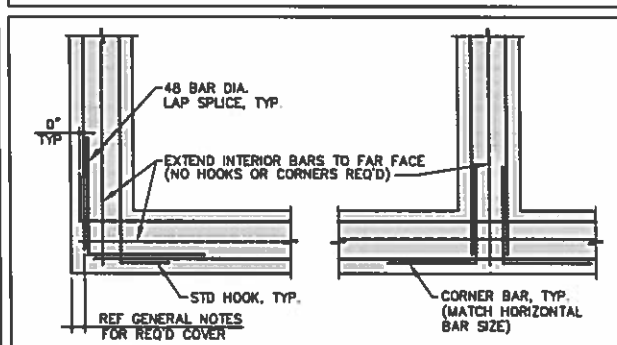

CORNER

INTERSECTION

B CORNER BAR DETAIL

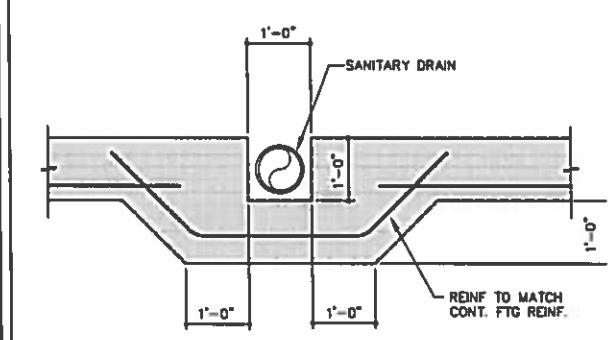

C SECTION • BLOCK OUT AS REQ.

HARVARD • JOLLY

ARCHITECTURE

Ft. Lauderdale 954-486-7910
Ft. Myers 239-275-7774
Jacksonville 904-737-3300
Orlando 407-422-7272
Punta Gorda 941-575-0403
St. Petersburg 727-898-4811
Tampa 813-286-8200
West Palm Beach 561-478-4457
AAC000119
www.HarvardJolly.com

NEW CLASSROOM BUILDING
RIVIERA BEACH, FLORIDA

RIVIERA BEACH, FLORIDA
CONTRUCTION DOCUEMENTS

Comm. No: JSG# 14101
Date: 09-24-2014
Drawn: E.B. / S.G.
Revised:

copyright 2014

TITLE: STRUCTURAL DETAILS

Scale: 3/4"=1'-0"

S4.0

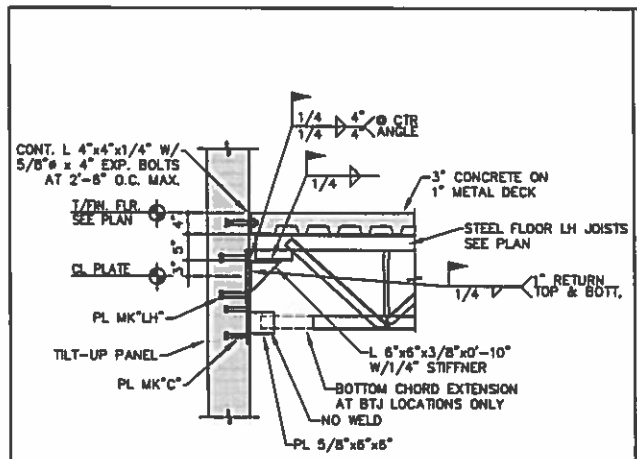

1 SECTION • LH BEARING

SCALE: 3/4"=1'-0" TYP. U.N.O.

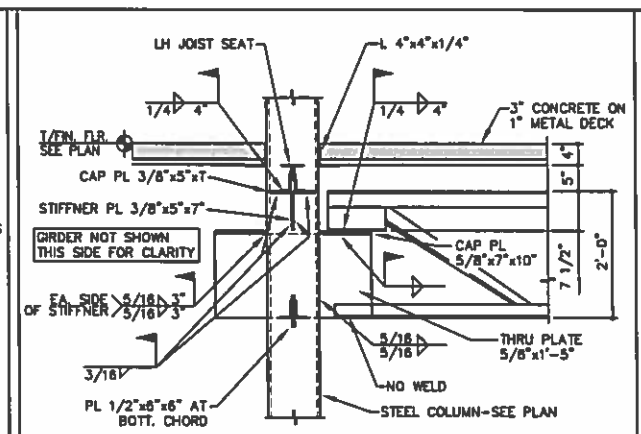

2 SECTION • FLOOR GIRDER

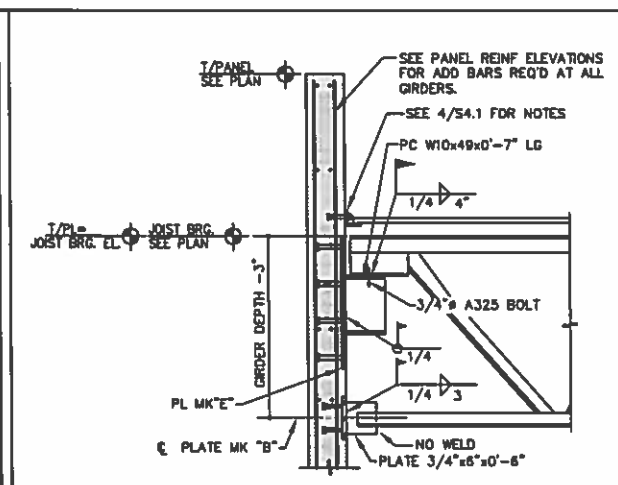

3 SECTION • FLOOR GIRDER BRG

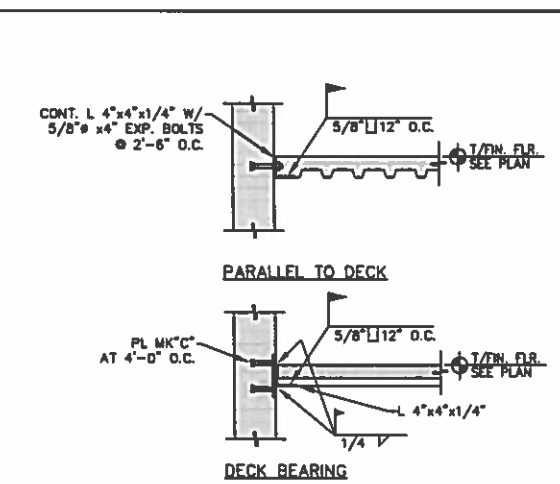

4 FLOOR DECK CONN. DETAILS

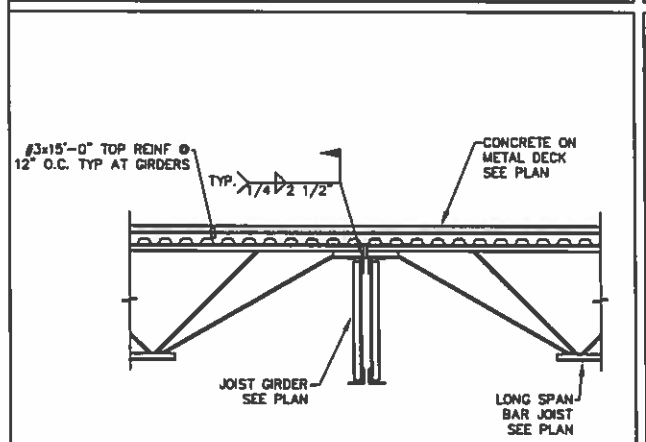

5 SECTION-JOIST TO GIRDER

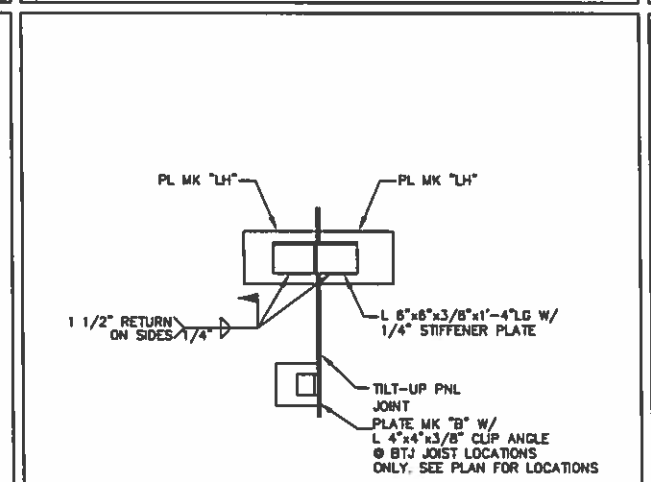

6 LH JOIST BRG. • PANEL JT

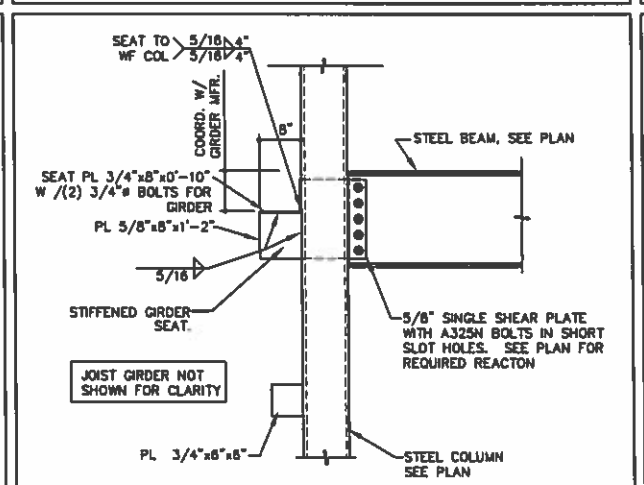

7 JOIST GIRDER AND BEAM • HSS COLUMN

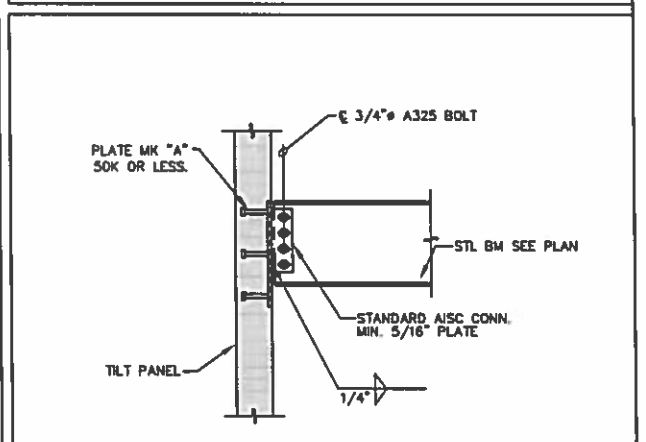

8 BEAM CONN TO WALL

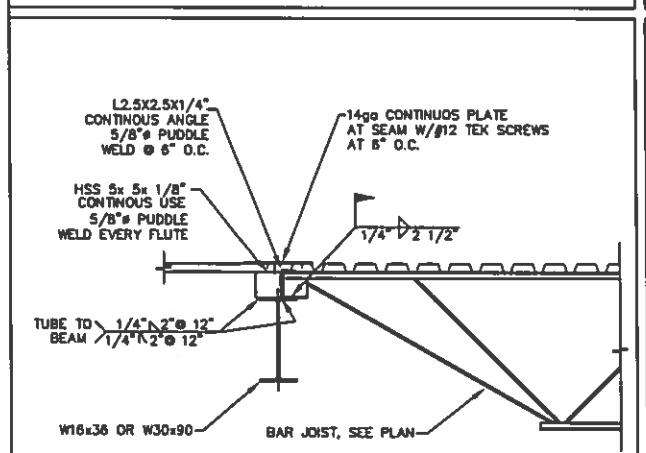

9 SECTION • W12x58

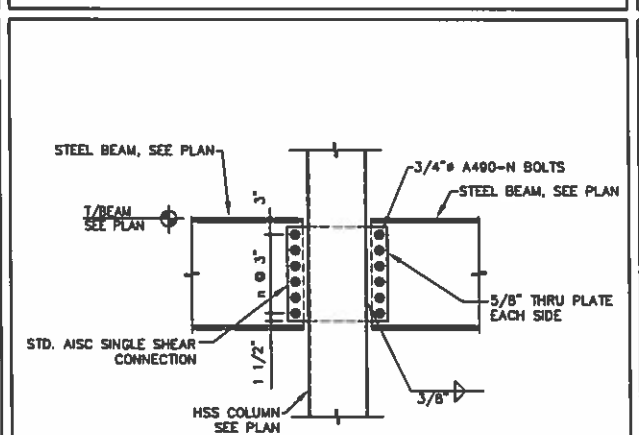

10 SECTION • CONT. HSS COLUMN

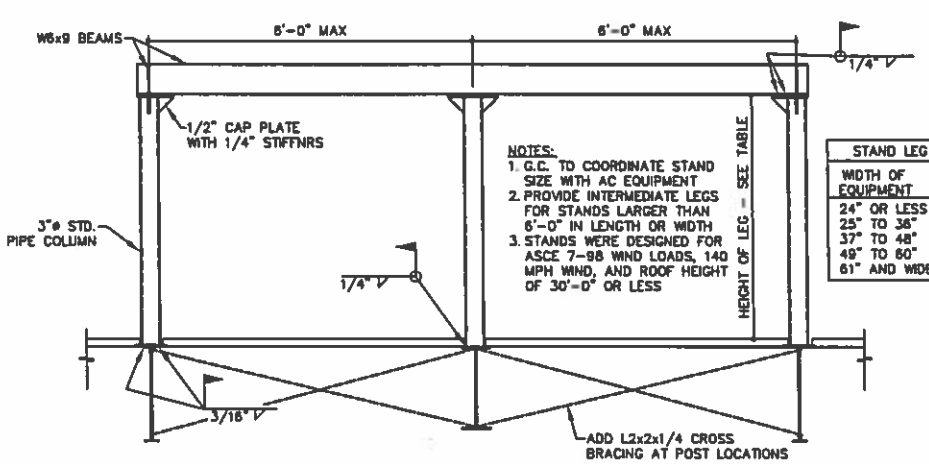

NOTES:
1. G.C. TO COORDINATE STAND SIZE WITH AC EQUIPMENT
2. PROVIDE INTERMEDIATE LEGS FOR STANDS LARGER THAN 6'-0" IN LENGTH OR WIDTH
3. STANDS WERE DESIGNED FOR ASCE 7-88 WIND LOADS, 140 MPH WIND, AND ROOF HEIGHT OF 30'-0" OR LESS

STAND LEG LENGTHS	
WIDTH OF EQUIPMENT	HEIGHT OF LEG
24" OR LESS	14"
25" TO 36"	18"
37" TO 48"	24"
49" TO 60"	30"
61" AND WIDER	48"

11 SECTION • AC STAND ON JOISTS

HARVARD • JOLLY ARCHITECTURE

Ft. Lauderdale 954-486-7910
Ft. Myers 239-275-7774
Jacksonville 904-296-3300
Orlando 407-677-7777
Punta Gorda 941-575-0403
St. Petersburg 727-896-4611
Tampa 813-286-8200
West Palm Beach 561-478-4457
AA0200119
www.HarvardJolly.com

NEW CLASSROOM BUILDING
RIVIERA BEACH, FLORIDA
RIVIERA BEACH, FLORIDA
CONTRUCTION DOCUEMENTS

Comm. No: JSG# 14101
Date: 09-24-2014
Drawn: E.B. / S.G.
Revised:

copyright 2014

STRUCTURAL

TITLE: STRUCTURAL DETAILS
Scale: 3/4"=1'-0"

S4.1

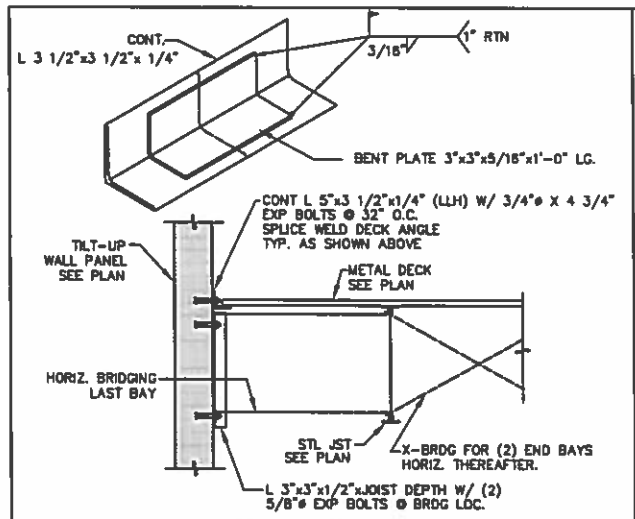

1 SECTION • BRIDGING

SCALE: 3/4"=1'-0" TYP. U.N.O.

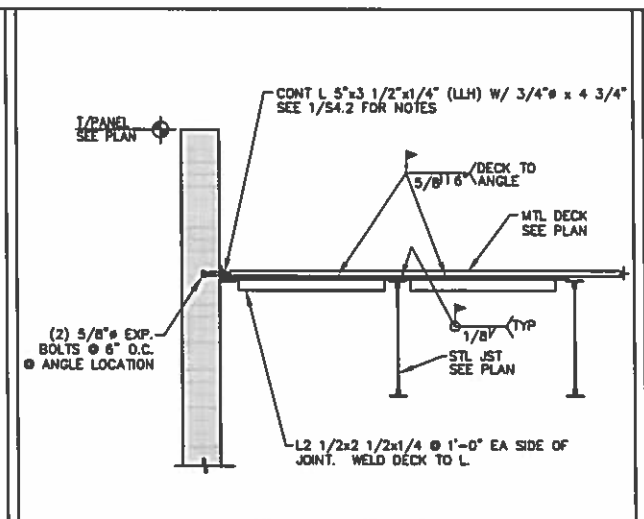

2 SECTION • PANEL JOINT

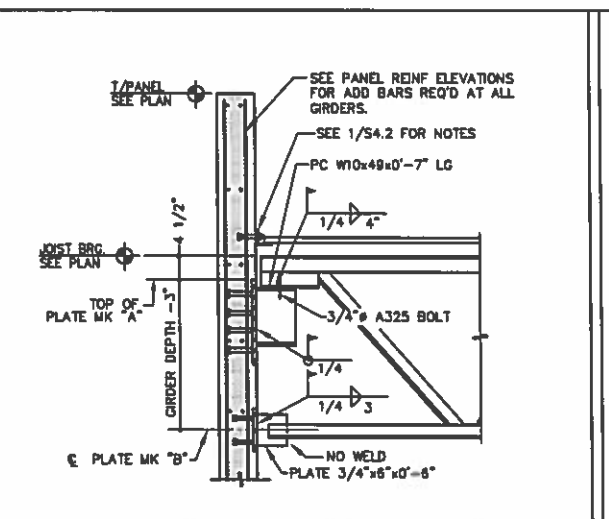

3 SECTION • ROOF GIRDER BEARING

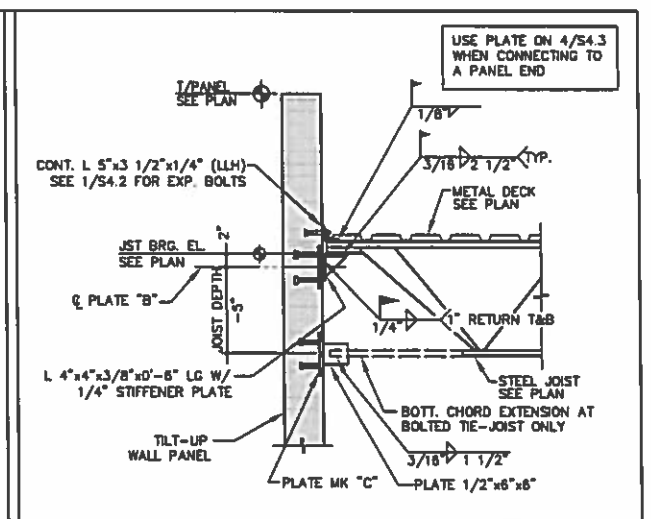

4 SECTION • K-JOIST BEARING

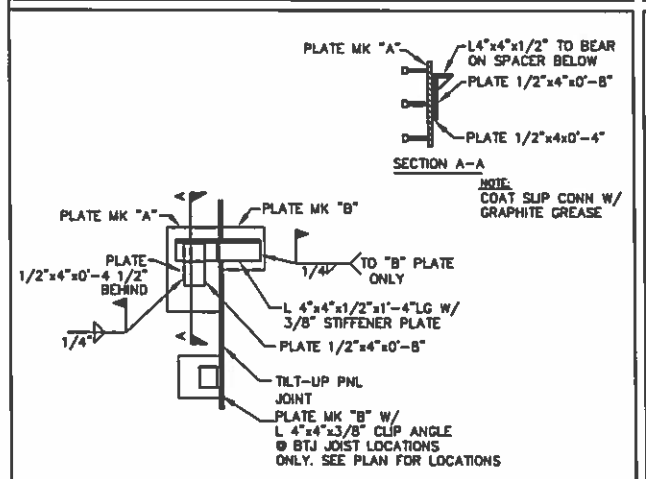

5 JOIST BRG • PANEL JOINT

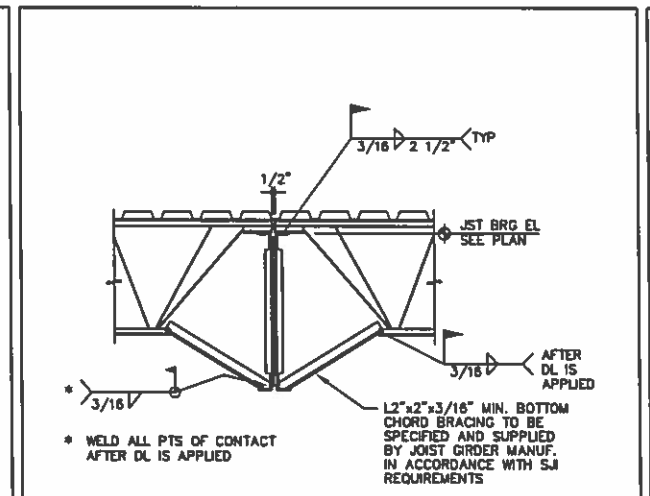

6 SECTION • JOIST TO GIRDER

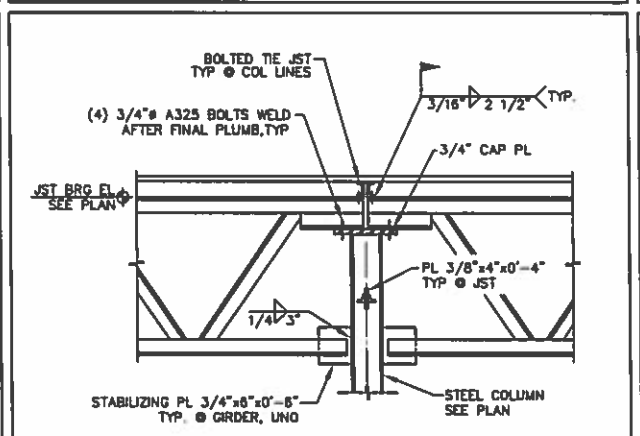

7 SECTION • GIRDER TO COL

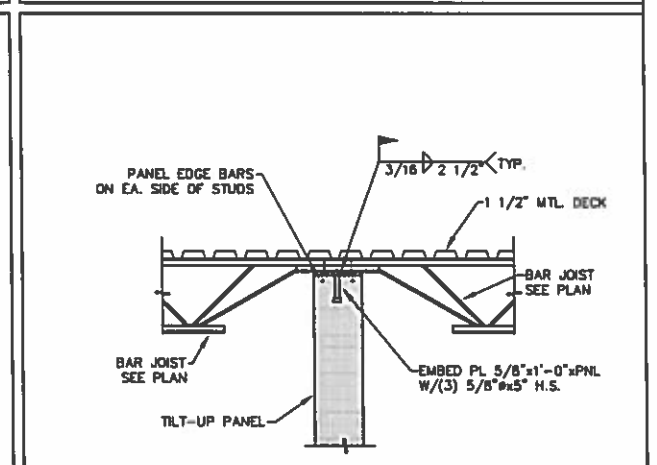

8 SECTION • COMMON BEARING

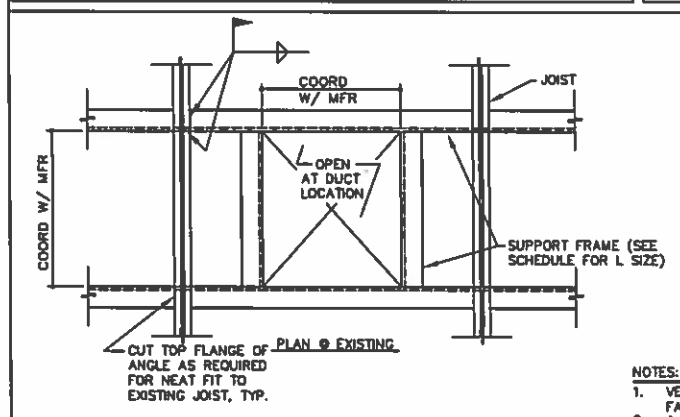

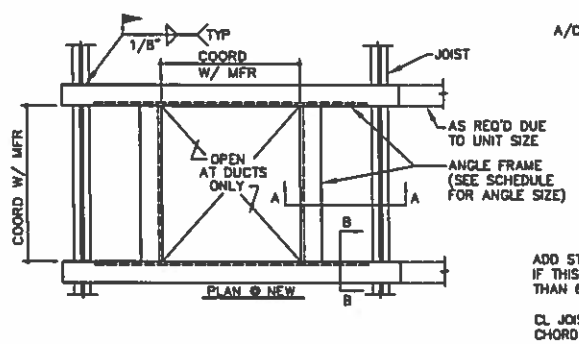

ROOF TOP UNIT FRAME SCHEDULE		
UNIT WEIGHT	ANGLE SIZE	
0 – 675 lbs	L4x3x1/4	LLH
676 – 1500 lbs	L4x3 1/2x5/16	LLH
1501 – 3000 lbs	L6x4x3/8	LLH
3001 – 6000 lbs	L6x6x3/8	

NOTES:

1. VERIFY ALL DIM'S & DETAILS W/ MECH CONTR BEFORE FABRICATION.
2. A/C UNIT TOTAL WEIGHT-SEE PLAN FOR WEIGHT AND FRAME SCHEDULE FOR ANGLE FRAME SIZE.
3. PROVIDE L3x3x1/4 FRAME AT ALL OPNGS GREATER THAN 12" ON ANY SIDE.
4. THE ANGLE FRAME SHALL BE PROVIDED SO THAT THE ENTIRE PERIMETER OF THE RTU CURB IS SUPPORTED.

A DET. MECH ROOF SUPPORT

SCALE: N.T.S.

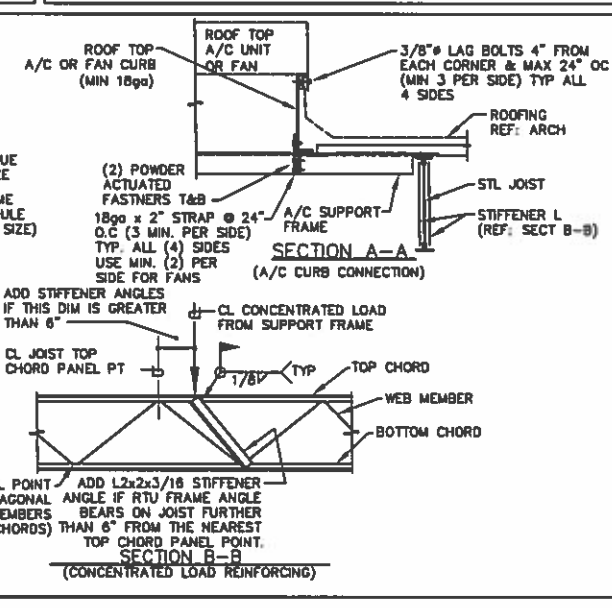

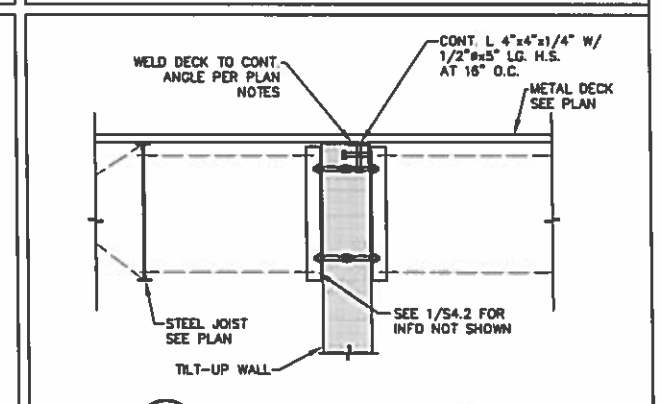

9 SECTION • DECK TO PANEL

HARVARD • JOLLY ARCHITECTURE

Ft. Lauderdale 954-486-7910
Ft. Myers 239-275-7774
Jacksonville 904-398-3300
Orlando 407-422-7777
Punta Gorda 941-575-0403
St. Petersburg 727-866-4611
Tampa 813-286-2500
West Palm Beach 561-478-4457
AAC000119
www.HarvardJolly.com

NEW CLASSROOM BUILDING
RIVIERA BEACH, FLORIDA
RIVIERA BEACH, FLORIDA
CONTRUCTION DOCUEMENTS

Comm. No: JSG# 14101
Date: 09-24-2014
Drawn: E.B. / S.G.
Revised:

copyright 2014

Title: STRUCTURAL DETAILS
Scale: 3/4"=1'-0"

S4.2

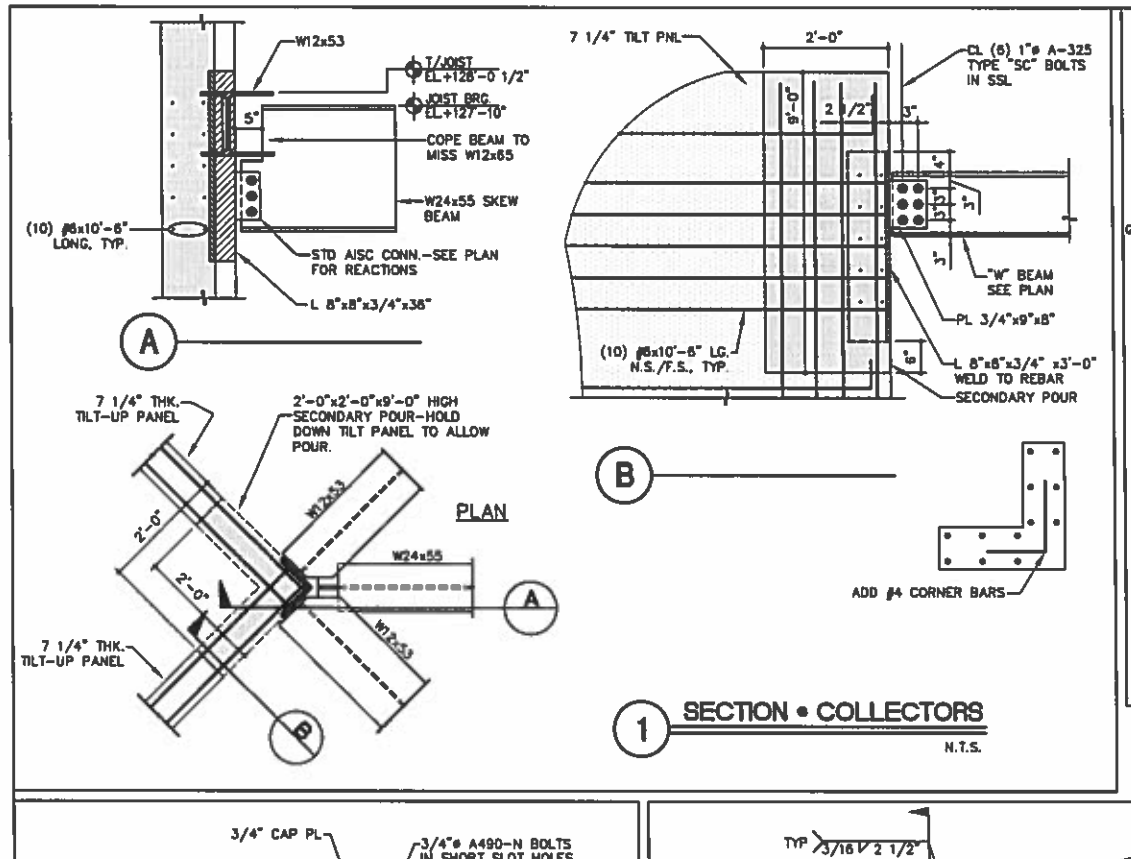

1 SECTION • COLLECTORS

N.T.S.

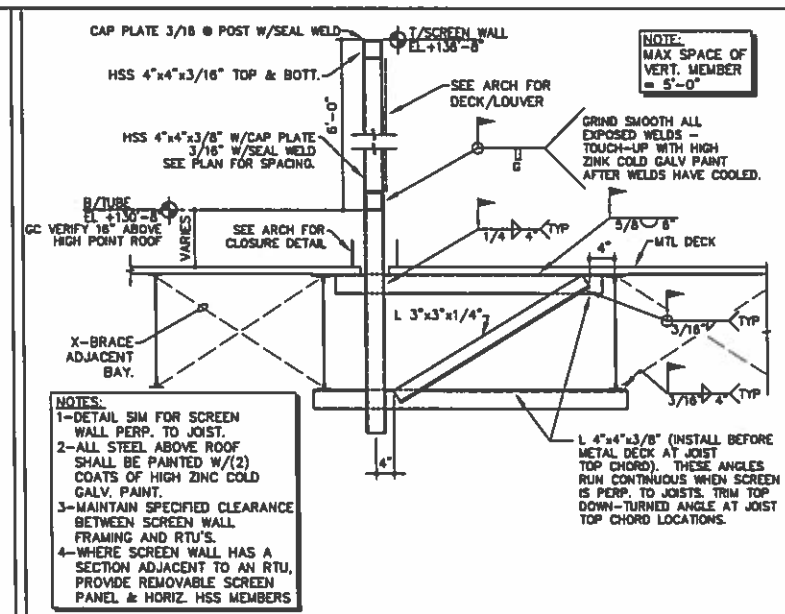

2 SECTION • SCREEN WALL

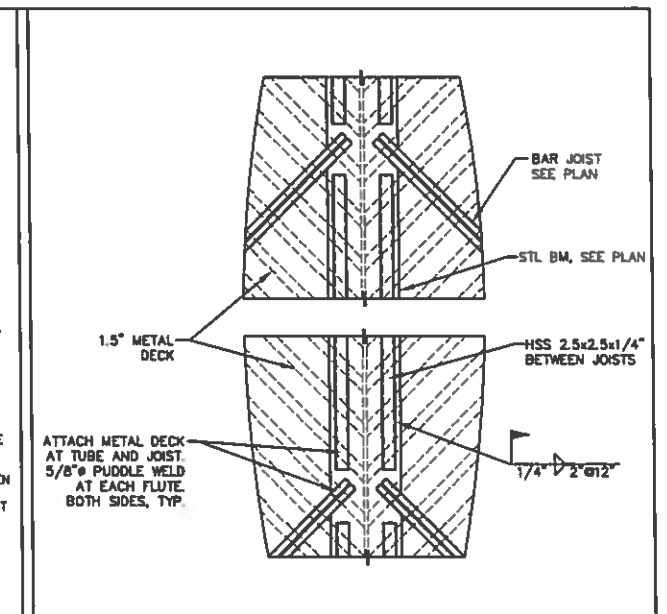

3 PLAN • ROOF DECK TRANSITION

N.T.S.

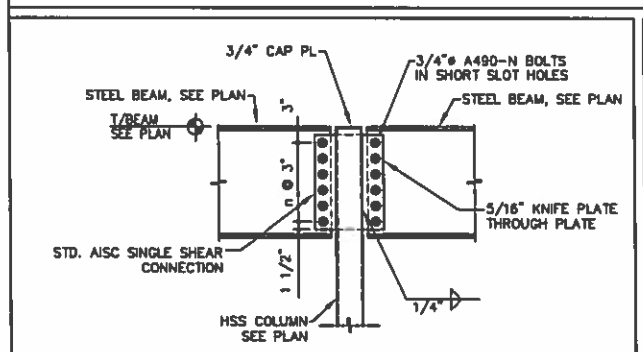

4 SECTION • BEAM TO STL. COLUMN

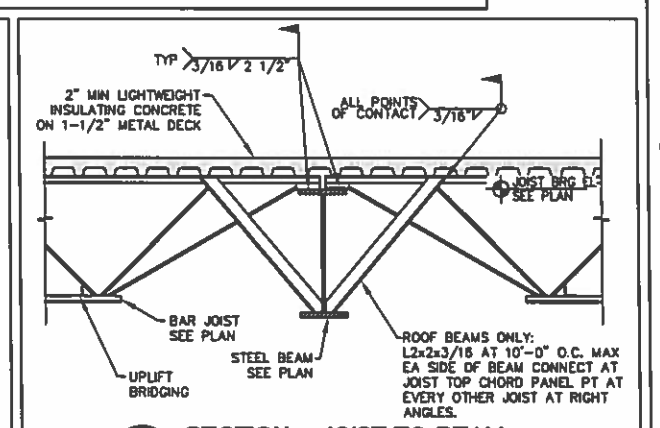

5 SECTION • JOIST TO BEAM

SCALE: 3/4"=1'-0" TYP. U.N.O.

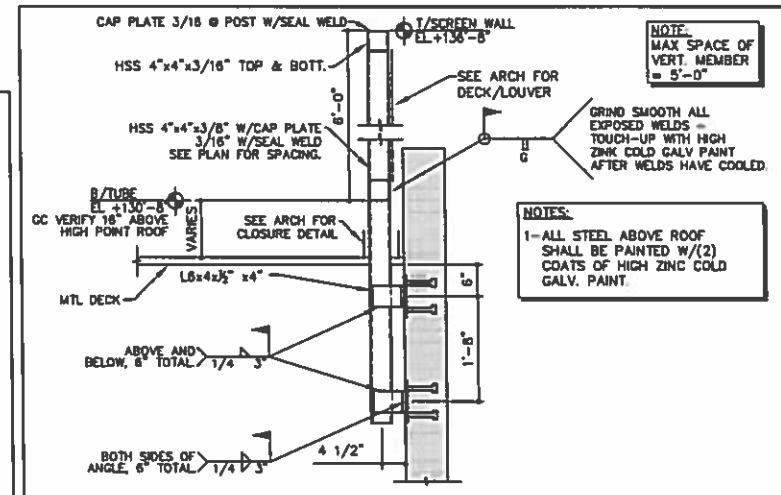

6 SECTION • SCREEN AT WALL

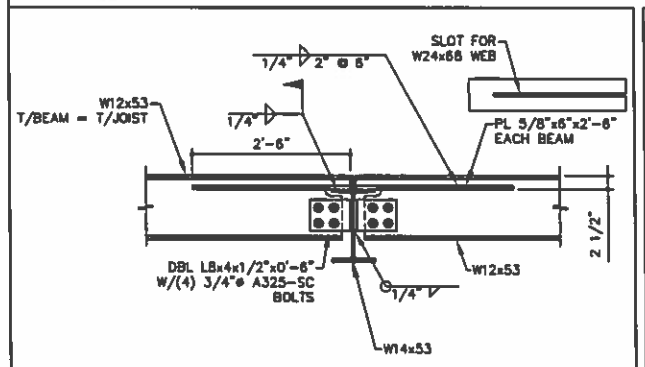

7 SECTION • COLLECTOR CONN.

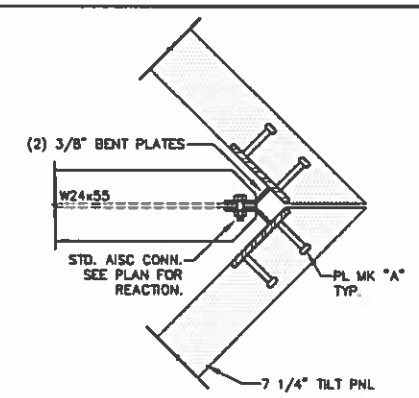

8 PLAN • CORNER CONN.

N.T.S.

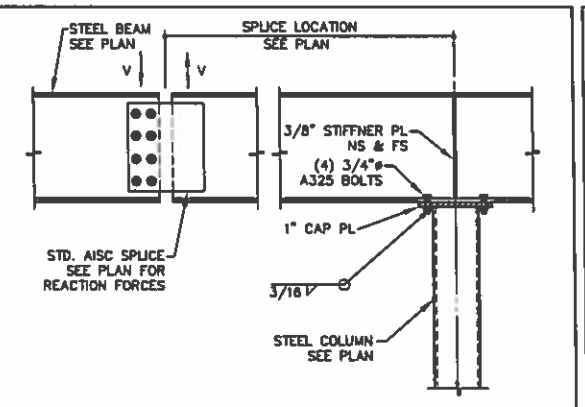

9 SECTION • CONT. BEAM

HARVARD • JOLLY ARCHITECTURE

Ft. Lauderdale 954-486-7910
Ft. Myers 239-275-7774
Jacksonville 904-398-3300
Orlando 407-422-7272
Punta Gorda 941-575-0403
St. Petersburg 727-896-4611
Tampa 813-286-2206
West Palm Beach 561-478-4457
AAC000119
www.HarvardJolly.com

NEW CLASSROOM BUILDING
RIVIERA BEACH, FLORIDA

RIVIERA BEACH, FLORIDA
CONTRUCTION DOCUEMENTS

Comm. No:	JSG# 14101
Date:	09-24-2014
Drawn:	E.B. / S.G.
Revised:	

copyright 2014

Title: STRUCTURAL DETAILS

Scale: 3/4"=1'-0"

S4.3

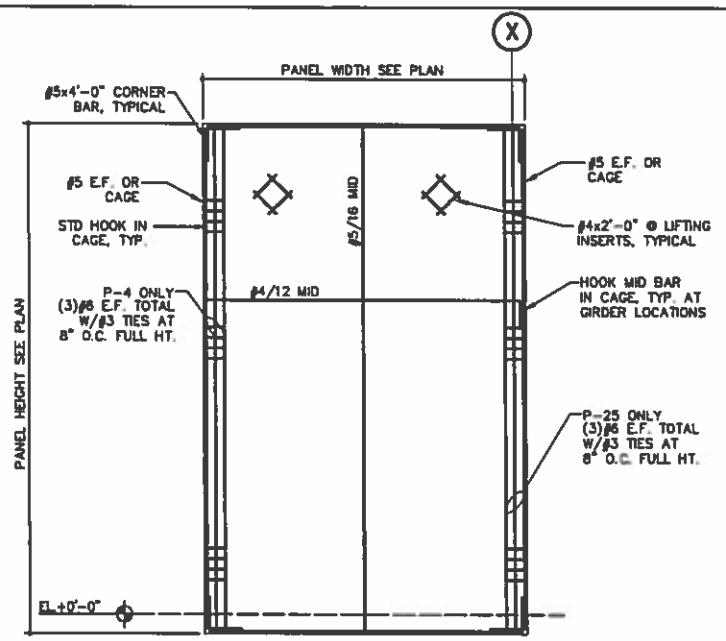

TYPE A-SOLID PANEL

7 1/4" THICK
PANELS: P-3, P-4, P-12, P-14, P-33, P-34, P-35

PROVIDE MINIMUM 3 CONNECTIONS BETWEEN PANELS AT INSIDE BUTT, OUTSIDE BUTT AND MITTERED CORNERS ONLY, U.N.O. ON PLAN. LOCATE CONNECTIONS AT 2'-0" ABOVE GROUND FLOOR, AND 1'-6" BELOW JST BRG (ROOF) OR T/BEAM (FLOORS) ELEVATIONS TYP. UND. RECESS & PATCH ALL PLATES 3/4" AT STAIR, ELEVATOR AND EXTERIOR CONNECTIONS ONLY U.N.O.

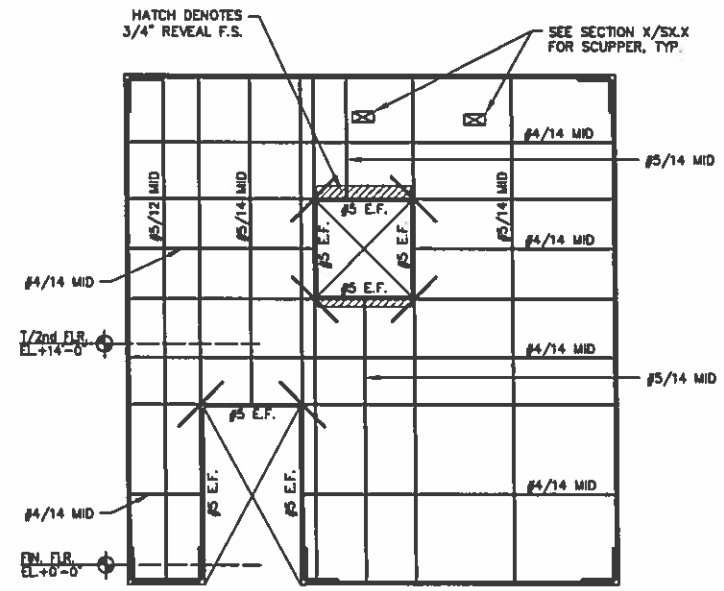

TYPE B-PANEL W/OPENINGS

8" THICK
PANELS: P-15

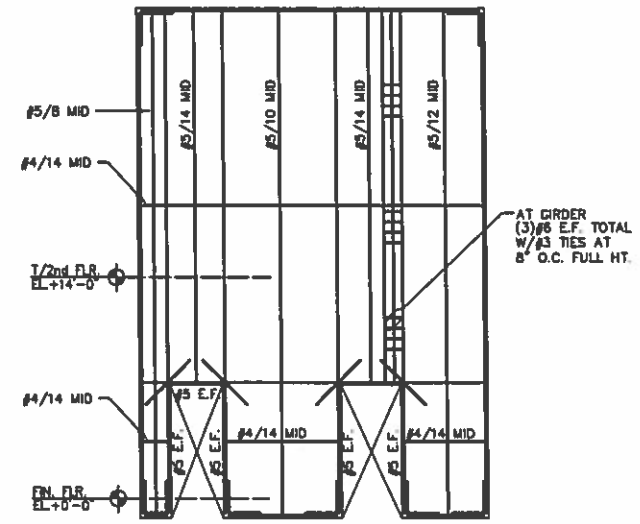

TYPE C-PANEL W/OPENINGS

8" THICK
PANELS: P-13

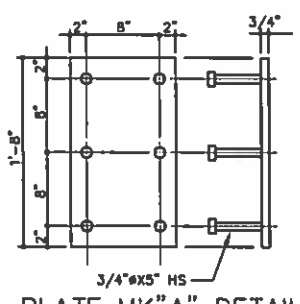

PLATE MK"A" DETAIL
SCALE: N.T.S.

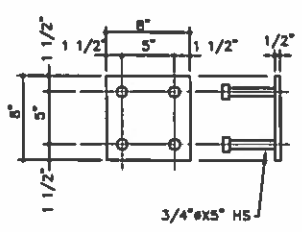

PLATE MK"B" DETAIL
SCALE: N.T.S.

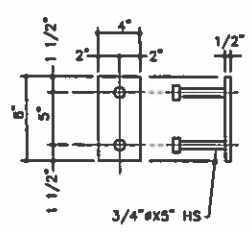

PLATE MK"C" DETAIL
SCALE: N.T.S.

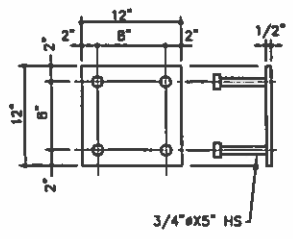

PLATE MK"D" DETAIL
SCALE: N.T.S.

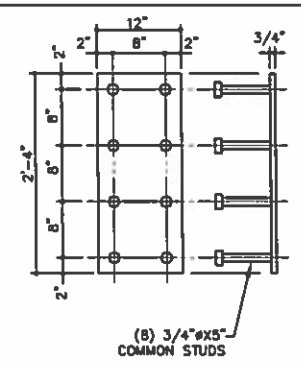

PLATE MK"G" DETAIL
SCALE: N.T.S.

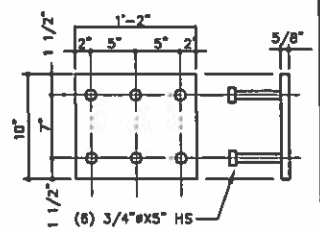

PLATE MK"LH" DETAIL
SCALE: N.T.S.

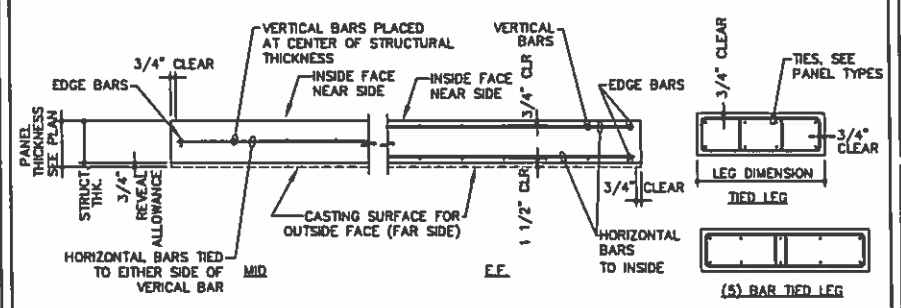

A REINFORCEMENT PLACEMENT DIAGRAMS
SCALE: N.T.S.

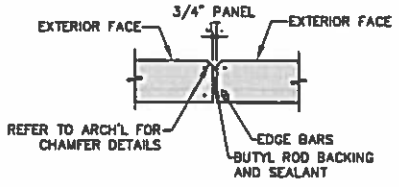

B TYPICAL PANEL JOINT
SCALE: N.T.S.

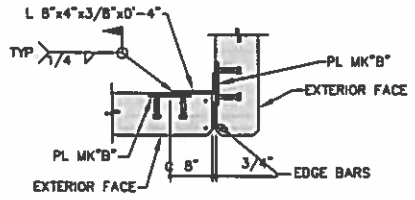

C OUTSIDE BUTT JOINT
SCALE: N.T.S.

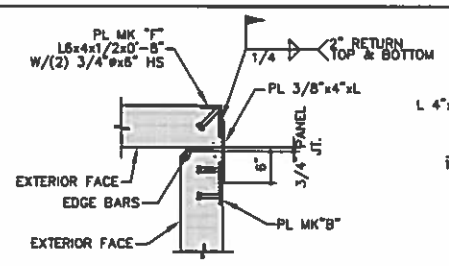

D INSIDE BUTT JOINT
SCALE: N.T.S.

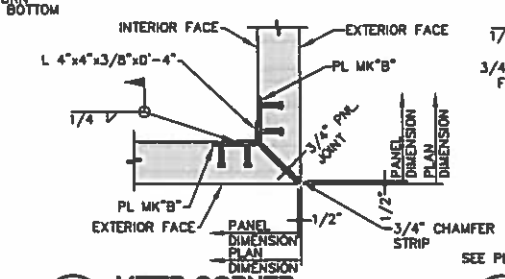

E MITER CORNER
SCALE: N.T.S.

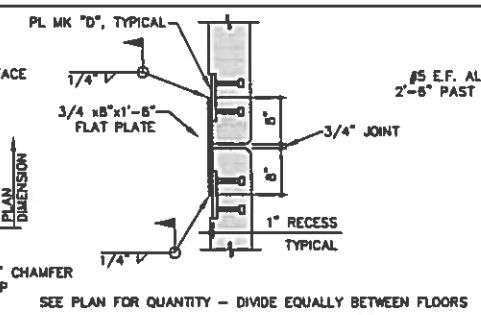

F PANEL - PANEL CONN.
SCALE: N.T.S.

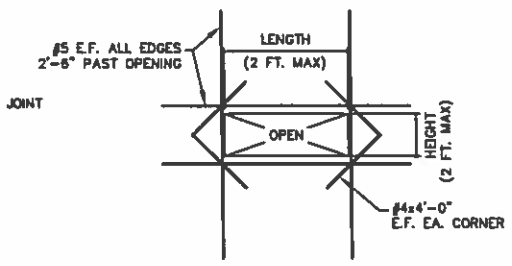

G TYP. SCUPPER/SMALL MECH. DETAIL
SCALE: N.T.S.

HARVARD•JOLLY
ARCHITECTURE

FL Lauderdale 954-486-7910
FL Myers 239-275-7774
Jacksonville 904-398-3300
Orlando 407-841-7777
Punta Gorda 941-575-0403
St. Petersburg 727-898-4811
Tampa 813-288-8200
West Palm Beach 561-478-4457
AAC000119
www.HarvardJolly.com

NEW CLASSROOM BUILDING
RIVIERA BEACH, FLORIDA
RIVIERA BEACH, FLORIDA
CONTRUCTION DOCUEMENTS

Comm. No: JSG# 14101
Date: 09-24-2014
Drawn: E.B. / S.G.
Revised:

copyright 2014

Title: PANEL REINFORCEMENT
Scale: 3/8"=1'-0"

S5.0

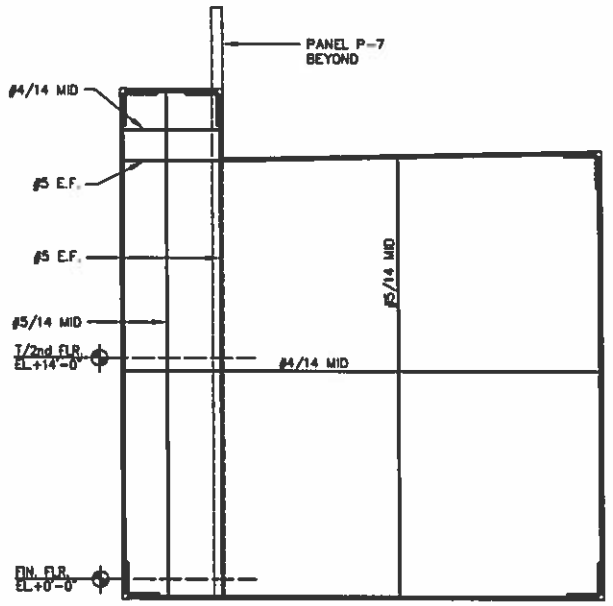

TYPE D-SOLID PANEL
8" THICK
PANELS: P-9

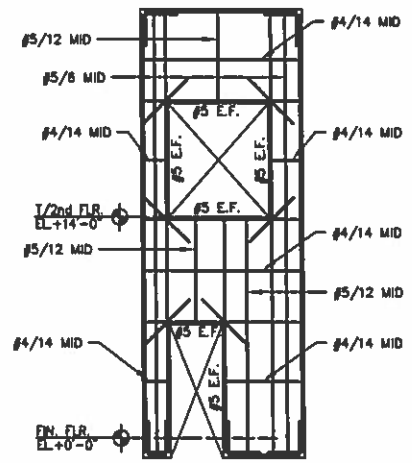

TYPE E-PANEL W/OPENINGS
8" THICK
PANELS: P-8

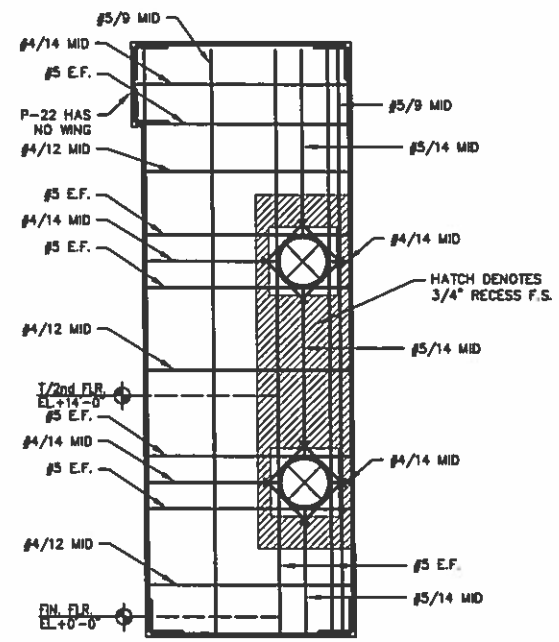

TYPE F-PANEL W/OPENINGS
8" THICK
PANELS: P-7
SIMILAR: P-22

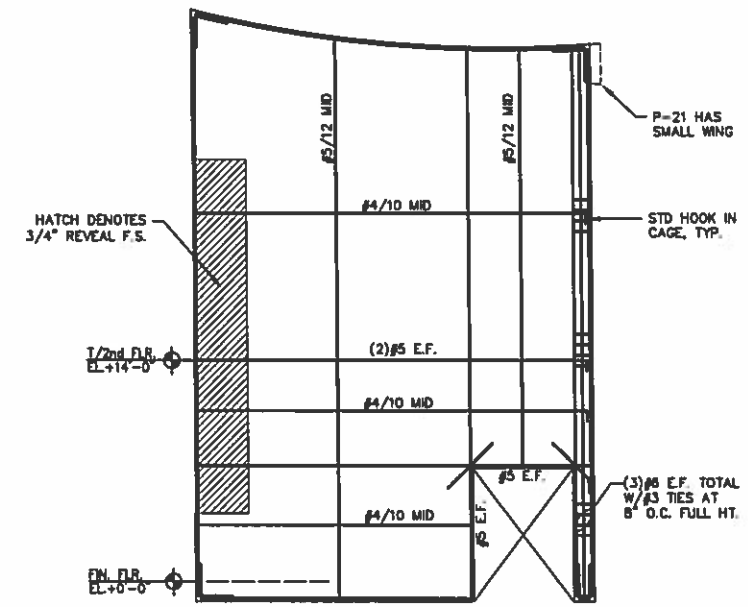

TYPE G-PANEL W/OPENING
8" THICK
PANELS: P-6
PANELS: P-21

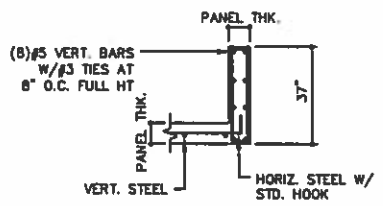

A-A RETURN LEG
N.T.S.

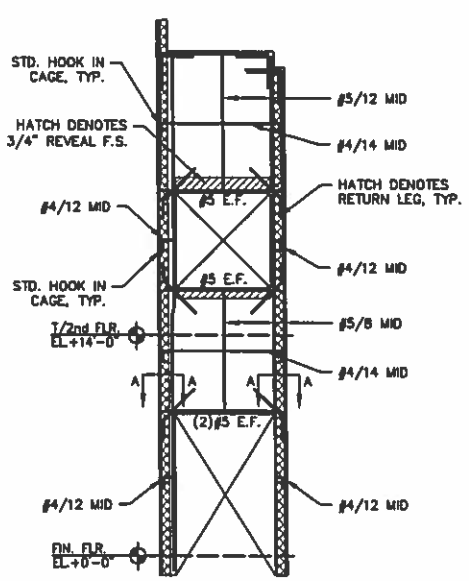

TYPE H-PANEL W/OPENINGS
8" THICK
PANELS: P-5

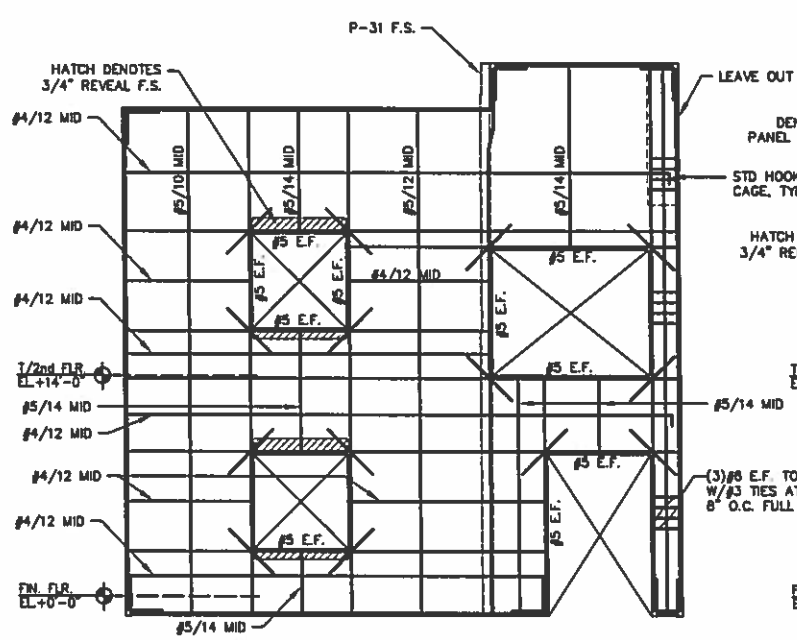

TYPE I-PANEL W/OPENINGS
8" THICK
PANELS: P-1

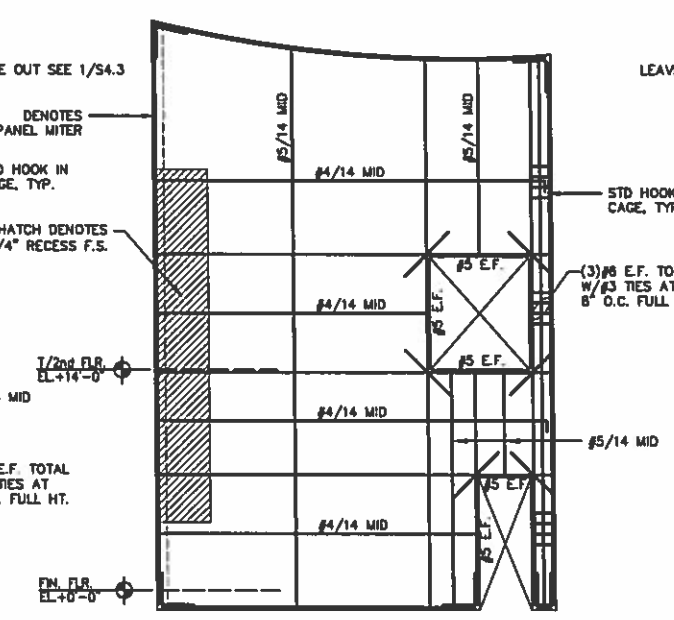

TYPE J-PANEL W/OPENINGS
8" THICK
PANELS: P-23

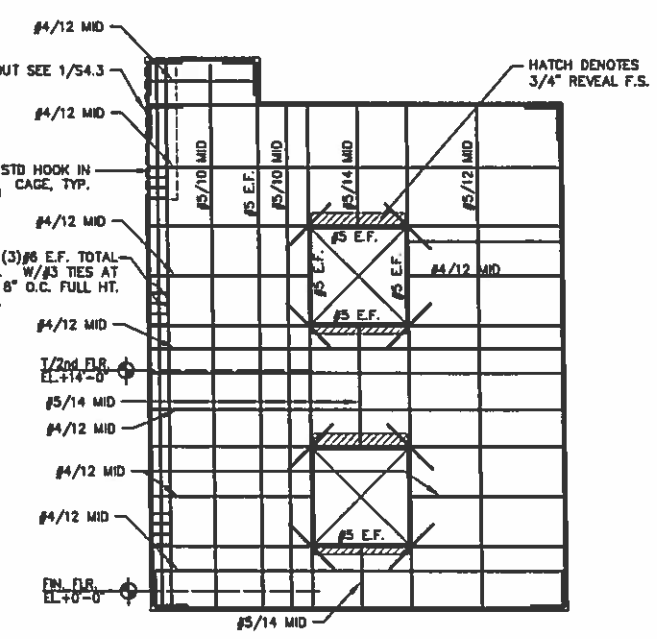

TYPE K-PANEL W/OPENINGS
8" THICK
PANELS: P-29

HARVARD•JOLLY
ARCHITECTURE

FL Lauderdale 954-486-7910
FL Myers 239-275-1774
Jacksonville 904-398-3300
Orlando 407-657-1777
Punta Gorda 941-575-0453
St. Petersburg 727-896-4611
Tampa 813-286-4208
West Palm Beach 561-478-4457
AA0003119
www.HarvardJolly.com

NEW CLASSROOM BUILDING
RIVIERA BEACH, FLORIDA
RIVIERA BEACH, FLORIDA
CONTRUCTION DOCUEMENTS

Comm. No: JSG# 14101
Date: 09-24-2014
Drawn: E.B. / S.G.
Revised:

copyright 2014

DIVISION
STRUCTURAL
GROUP 15 DIVISION

Title: PANEL REINFORCEMENT
Scale: 3/16"=1'-0"

S5.1

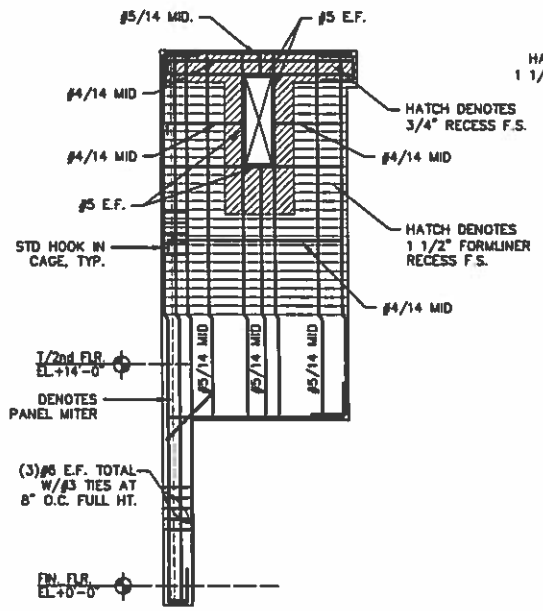

TYPE L-PANEL W/KNOTCH
8" THICK
PANELS: P-30

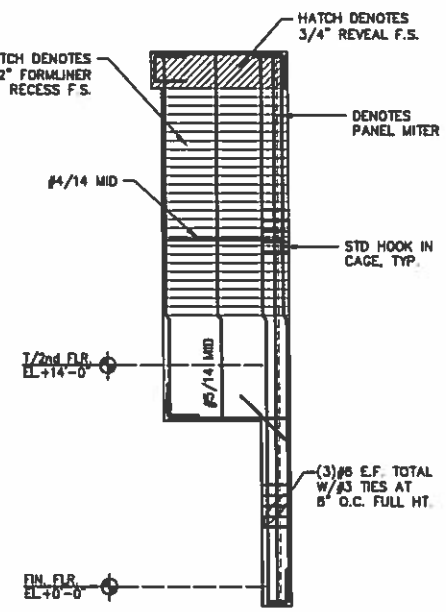

TYPE M-PANEL W/KNOTCH
8" THICK
PANELS: P-31

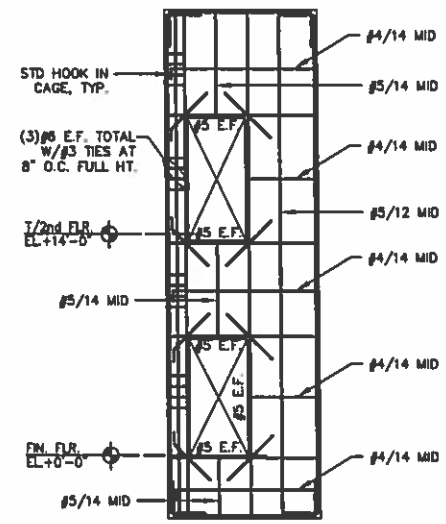

TYPE N-PANEL W/OPENINGS
8" THICK
PANELS: P-32

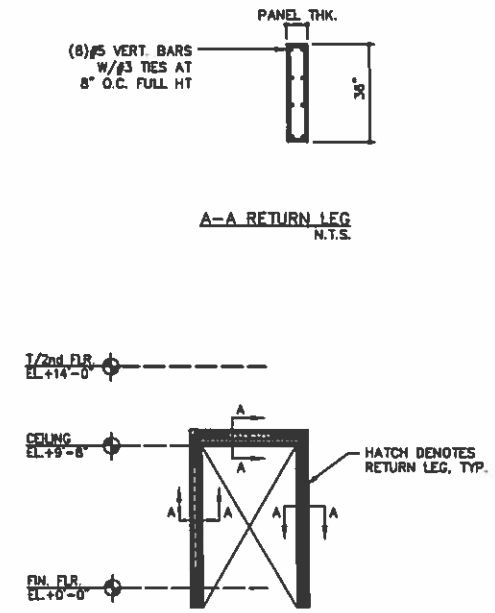

TYPE O-PANEL W/OPENING
8" THICK
PANELS: P-36

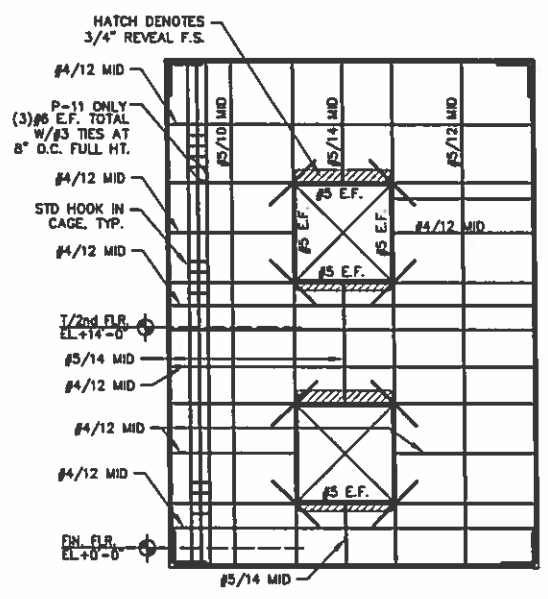

TYPE P-PANEL W/OPENINGS
8" THICK
PANELS: P-2, P-10, P-11, P-16, P-17, P-18
P-19, P-25, P-26, P-27, P-28

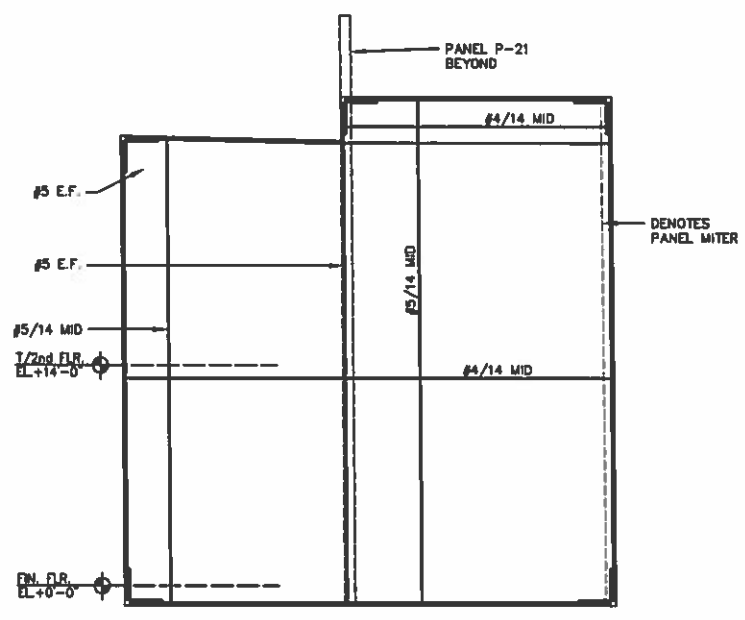

TYPE Q-SOLID PANEL
8" THICK
PANELS: P-20

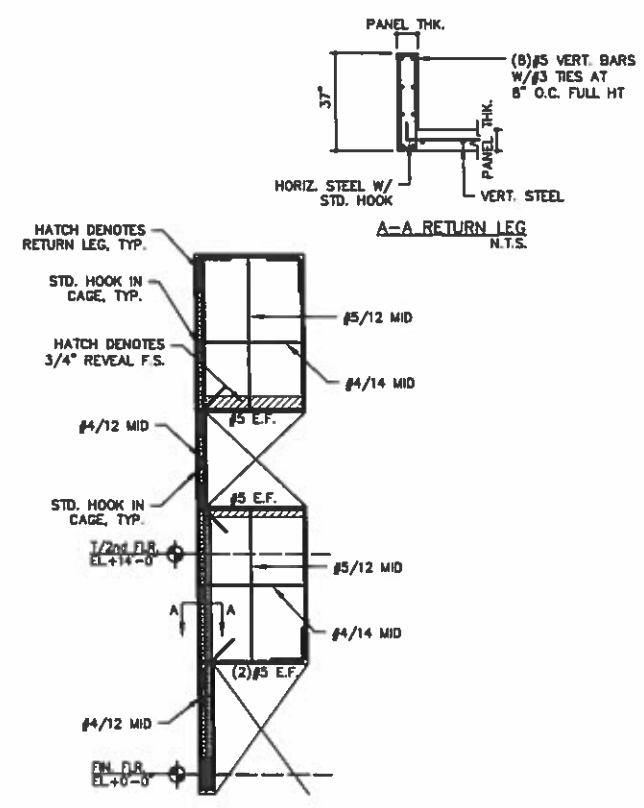

TYPE R-PANEL W/RET. LEG
8" THICK
PANELS: P-24

HARVARD•JOLLY
ARCHITECTURE

FL Lauderdale 954-486-7910
FL Myers 239-275-7774
Jacksonville 904-396-2300
Orlando 407-647-7777
Punta Gorda 941-575-0403
St. Petersburg 727-898-4511
Tampa 813-286-2208
West Palm Beach 561-478-4457
AAC000119
www.HarvardJolly.com

NEW CLASSROOM BUILDING
RIVIERA BEACH, FLORIDA
RIVIERA BEACH, FLORIDA
CONTRUCTION DOCUEMENTS

Comm. No: JSG# 14101
Date: 09-24-2014
Drawn: E.B. / S.G.
Revised:

copyright 2014

Title: PANEL REINFORCEMENT
Scale: 3/16"=1'-0"

S5.2

CITY OF RIVIERA BEACH CITY COUNCIL
AGENDA ITEM SUMMARY

Meeting Date: 5/3/2017

Agenda Category: PRESENTATIONS

Subject: DISCUSSION AND DELIBERATION BY COUNCIL OF C.A.P. GOVERNMENT, INC. AND THE COLD STORAGE.

Recommendation/Motion:

Originating Dept	EXECUTIVE	**Costs**	
User Dept.	EXECUTIVE	**Funding Source**	
Advertised	No	**Budget Account Number**	
Date			
Paper			
Affected Parties	Not Required		

Background/Summary:

Fiscal Years
Capital Expenditures
Operating Costs
External Revenues
Program Income (city)
In-kind Match (city)
Net Fiscal Impact
NO. Additional FTE Positions (cumulative)

III. Review Comments

A. Finance Department Comments:

B. Purchasing/Intergovernmental Relations/Grants Comments:

C. Department Director Review:

Contract Start Date

Contract End Date

Renewal Start Date

Renewal End Date

Number of 12 month terms this renewal

Dollar Amount

Contractor Company Name

Contractor Contact

Contractor Address

Contractor Phone Number

Contractor Email

Type of Contract

Describe

ATTACHMENTS:

File Name	Description	Upload Date	Type
CAP_-__Cold_Storage_April_11_2017.pdf	CAP - COLD STORAGE - APRIL 11, 2017	4/12/2017	Cover Memo

REVIEWERS:

Department	Reviewer	Action	Date
City Manager	Mitchell, Dorothy	Approved	3/29/2017 - 3:53 PM

City Council Meeting

CAP/Cold Storage

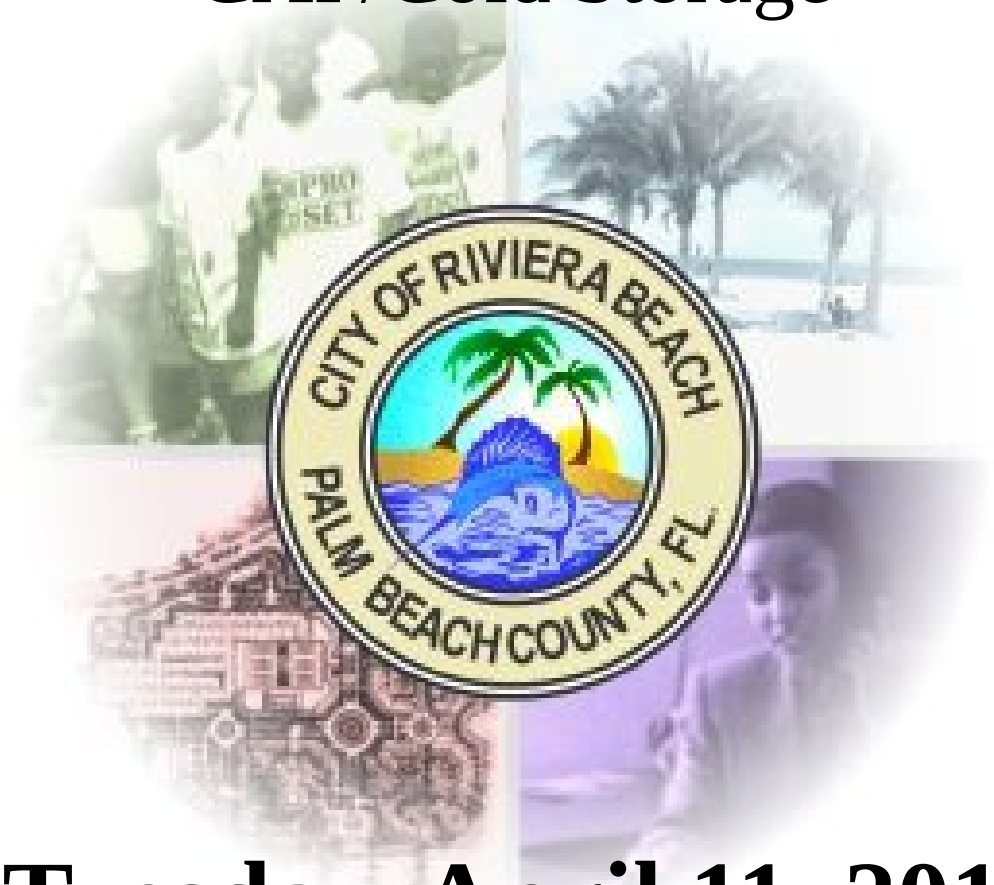

Tuesday, April 11, 2017

CAP Government

- RFP 805-16 (6/2/16)[Resolution 139-16]
- Cap PSA (9/12/16)
- Building Department Load
  - FY14 2,535 Permits with a value $36.3M
  - FY15 2,952 Permits with a value $73.7M
  - FY16 2,847 Permits with a value $104.2M
  - ½ FY16 1,336 Permits with a value $66.3M
  - ½ FY17 1,290 Permits with a value $86.3M
    - **30% INCREASE IN PERMITTING**

CAP Government

- Cap Government Payment
  - PO# 112651($25k) - $22,587
  - PO# 114532($100k) - $46,416
  - Total - $69,003
- Cap Government Outstanding Invoices
  - Total $398,805.00
  - 10/10/16 $3,240.00 1/13/17 $73,802.50
  - 11/15/16 $62,611.25 2/13/17 $71,497.50
  - 12/8/16 $66,691.25 3/9/17 $61,337.50
  - 4/4/17 $59,625.00

CAP Government

- Cap Government Outstanding Invoices
  - Prompt Payment Act FS 218.70
- Budget Amendment May 3rd Council Meeting
- 90 Day Transition Plan
  - Building Department Open Positions(5)
    - Permit Technician
    - Combination Plans Examiner
    - Building Inspector(3)
  - City Council Transition Update July 19th 2017

Cold Storage

- Site Plan Approval Res No 34-15 June 17th 2015
- Construction Commencement Date December 4th 2015

Cold Storage

- Construction Issues
  - Foundation Permit
  - Manufactured Building
  - Work conducted without permit
  - Permit Valuation
- Shut Down #1 November 14th 2016
- Shut Down #2 March 10th 2017

Cold Storage

- Developer Meeting March 30th 2017
  - Valuation Resolved
- Permit Issued March 30th 2017
- Onsite Inspection April 4th 2017

CITY OF RIVIERA BEACH CITY COUNCIL
AGENDA ITEM SUMMARY

Meeting Date: 5/3/2017

Agenda Category: REGULAR

Subject: **REPEALING THE CUT OFF TIME FOR ALL MEETINGS**

Recommendation/Motion: **APPROVE THE RESOLUTION REPEALING SECTION 1 OF RESOLUTION NO. 91-16 AS IT RELATE TO THE CERTAIN TIME FOR ENDING MEETINGS.**

Originating Dept	OFFICE OF THE CITY MANAGER	**Costs**	
User Dept.	ALL	**Funding Source**	
Advertised	No	**Budget Account Number**	
Date			
Paper			
Affected Parties	Not Required		

Background/Summary:

Fiscal Years
Capital Expenditures
Operating Costs
External Revenues
Program Income (city)
In-kind Match (city)
Net Fiscal Impact
NO. Additional FTE Positions (cumulative)

III. Review Comments

A. Finance Department Comments:

B. Purchasing/Intergovernmental Relations/Grants Comments:

C. Department Director Review:

Contract Start Date

Contract End Date

Renewal Start Date

Renewal End Date

Number of 12 month terms this renewal

Dollar Amount

Contractor Company Name

Contractor Contact

Contractor Address

Contractor Phone Number

Contractor Email

Type of Contract

Describe

ATTACHMENTS:

File Name	Description	Upload Date	Type
REPEALING_END_TIME.docx	RESOLUTION REPEALING CUT OF TIME	4/25/2017	Resolution
RES_91-16.pdf	RESOLUTION NO 91-16	4/25/2017	Backup Material
RES_NO_116-12.pdf	RESOLUTION NO. 116-12	4/25/2017	Backup Material
RES_NO_26-02.pdf	RESOLUTION NO. 26-02	4/25/2017	Backup Material

REVIEWERS:

Department	Reviewer	Action	Date
Purchasing	Jones, Danny	Approved	4/26/2017 - 8:15 PM

RESOLUTION NO. _____

A RESOLUTION OF THE CITY COUNCIL OF THE CITY OF RIVIERA BEACH, PALM BEACH COUNTY, FLORIDA AMENDING SECTION 1 OF RESOLUTION NUMBER 91-16 BY DELETING THE END TIME OF 10:00 P.M. FOR ALL MEETINGS; AND PROVIDING AN EFFECTIVE DATE.

WHEREAS, the City Council has, on a number of occasions, been unable to complete public business due to time constraints; and

WHEREAS, it is the desire of the City Council to complete such business without such constraints.

NOW THEREFORE, BE IT RESOLVED BY THE CITY COUNCIL OF THE CITY OF RIVIERA BEACH, FLORIDA, AS FOLLOWS:

SECTION 1. That Regular City Council Meetings shall begin at 6:00 p.m.; all other meetings (Special City Council Meetings and Workshops) will start at the advertised time with no restraints on the end time.

SECTION 2. That the City Council will maintain flexibility in regards to the start time of its meetings.

SECTION 3. That any resolution or section of a resolution conflicting with this resolution is hereby repealed.

SECTION 4. That the City Council may change, by majority vote, any of the noted times as necessary.

SECTION 5. This resolution shall take effect immediately upon approval.

PASSED and APPROVED this _____ day of _____ , 20 17.

APPROVED:

_____
THOMAS A. MASTERS, MAYOR

_____
KASHAMBA L. MILLER-ANDERSON

ATTEST:

_____
CLAUDENE L. ANTHONY, CMC
CITY CLERK

_____
TONYA DAVIS JOHNSON
CHAIR PRO TEM

_____
LYNNE L. HUBBARD
COUNCILPERSON

_____
DAWN S. PARDO
COUNCILPERSON

_____
TERENCE D. DAVIS
COUNCILPERSON

MOTIONED BY: _____

APPROVED BY: _____

L. HUBBARD _____

K. MILLER-ANDERSON _____

T. DAVIS JOHNSON _____

D. PARDO _____

T. DAVIS _____

REVIEWED AS TO LEGAL SUFFICIENCY

_____
ANDREW DEGRAFFENREIDT, III
CITY ATTORNEY

RESOLUTION NO. 91-16

A RESOLUTION OF THE CITY COUNCIL OF THE CITY OF RIVIERA BEACH, PALM BEACH COUNTY, FLORIDA AMENDING SECTION 3 OF RESOLUTION NUMBER 116-12 BY CHANGING THE START TIME OF REGULAR CITY COUNCIL MEETINGS FROM 5:30 P.M. TO 6:00 P.M. WITH THE PUBLIC COMMENT PORTION TO BEGIN AT APPROXIMATELY 7:30 P.M. OR IMMEDIATELY THEREAFTER; AND PROVIDING AN EFFECTIVE DATE.

WHEREAS, the City Council, at its June 15, 2016 Regular City Council Meeting, discussed changing the start time of its regular meetings to address the concerns of citizen attendance and participation; and

WHEREAS, there was a consensus to change the start time of the Regular City Council Meetings in an effort to encourage attendance and participation.

NOW THEREFORE, BE IT RESOLVED BY THE CITY COUNCIL OF THE CITY OF RIVIERA BEACH, FLORIDA, AS FOLLOWS:

Section 1. That Regular City Council Meetings shall begin at 6:00 p.m. and adjourn at 10:00 p.m. unless extended by a motion of the City Council.

Section 2. That the Public Comments portion shall begin at approximately 7:30 p.m. or immediately thereafter unless the City's business is completed sooner, in which event Public Comments will begin sooner.

Section 3. That the City Council may change by majority vote any of the noted times as necessary.

Section 4. This resolution shall take effect on September 1, 2016.

PASSED and APPROVED this 20TH day of JULY, 20 16.

SIGNATURES ON FOLLOWING PAGE

RESOULTION NO. 91-16
PAGE 2

APPROVED:

THOMAS A. MASTERS
MAYOR

(MUNICIPAL SEAL)

ATTEST

CLAUDENE L. ANTHONY
CERTIFIED MUNICIPAL CLERK
CITY CLERK

TERENCE D. DAVIS
CHAIRPERSON

KASHAMBA L. MILLER-ANDERSON
CHAIR PRO TEM

LYNNE L. HUBBARD
COUNCILPERSON

TONYA DAVIS JOHNSON
COUNCILPERSON

DAWN S. PARDO
COUNCILPERSON

MOTIONED BY: T. DAVIS JOHNSON

SECONDED BY: K. MILLER-ANDERSON

L. HUBBARD:	AYE
K. MILLER-ANDERSON	AYE
T. DAVIS JOHNSON	AYE
D. PARDO	OUT
T. DAVIS	AYE

REVIEWED AS TO LEGAL SUFFICIENCY

PAMALA H. RYAN, B.C.S.
CITY ATTORNEY

DATE: 7/20/16

RESOLUTION NO. 116-12

A RESOLUTION OF THE CITY COUNCIL OF THE CITY OF RIVIERA BEACH, PALM BEACH COUNTY, FLORIDA, CHANGING REGULAR CITY COUNCIL MEETINGS FROM TWICE A MONTH TO ONCE PER MONTH; CHANGING THE START TIME OF CITY COUNCIL MEETINGS FROM 6:30 P.M. TO 5:30 P.M.; AND ADDING AN END CERTAIN TIME OF 10:00 P.M., WITH THE PUBLIC COMMENT PORTION TO BEGIN AT APPROXIMATELY 7:00 P.M.; AND PROVIDING AN EFFECTIVE DATE.

WHEREAS, the City Council currently meets twice a month, the 1st and 3rd Wednesdays of the month at 6:30 p.m.; and

WHEREAS, the City Council, acting as the Community Redevelopment Agency Board, also meets on the 2nd and 4th Wednesdays of every month; and

WHEREAS, in an effort to better serve the constituents of the City, the City Council finds that more time is needed by staff and the City Council to work on projects in the City; and

WHEREAS, the City Council, after discussing this issue at length at the September 19, 2012 City Council meeting, finds that it is in the City's best interest to change its regular meetings from twice a month to once per month.

NOW, THEREFORE, BE IT RESOLVED BY THE CITY COUNCIL OF THE CITY OF RIVIERA BEACH, PALM BEACH COUNTY, FLORIDA, as follows:

SECTION 1. That the regular City Council meeting of the City Council shall be held on the 1st Wednesday of every month.

SECTION 2. That the 3rd Wednesday of every month shall be reserved for regular council meetings as needed, Utility Special District meetings, workshops and special meetings.

SECTION 3. That regular City Council meetings shall begin at 5:30 p.m. and end by 10:00 p.m., with the public comment portion to begin at approximately 7:00 p.m. unless the City's business ends sooner.

SECTION 4. That the City Council may change any of the times noted above as necessary.

SECTION 5. That this resolution shall take effect immediately upon its passage and approval by the City Council.

PASSED and APPROVED this 3RD day of October, 2012.

APPROVED:

THOMAS A. MASTERS
MAYOR

BILLIE E. BROOKS
CHAIRPERSON

ATTEST:

CARRIE E. WARD
MASTER MUNICIPAL CLERK
CITY CLERK

ABSENT
DAWN S. PARDO
CHAIR PRO TEM

JUDY L. DAVIS
COUNCILPERSON

CEDRICK A. THOMAS
COUNCILPERSON

SHELBY L. LOWE
COUNCILPERSON

MOTIONED BY: J. DAVIS

SECONDED BY: S. LOWE

B. BROOKS	AYE
D. PARDO	ABSENT
J. DAVIS	AYE
C. THOMAS	AYE
S. LOWE	AYE

REVIEWED AS TO LEGAL SUFFICIENCY

PAMALA HANNA RYAN, CITY ATTORNEY

DATE: 10/3/12

PHR: 10/3/12

RESOLUTION NO. 26-02

A RESOLUTION OF THE CITY COUNCIL OF THE CITY OF RIVIERA BEACH, PALM BEACH COUNTY, FLORIDA, REPEALING RESOLUTION NUMBER 47-01 ENTITLED "A SUPPLEMENT TO SECTION 2-29 OF THE CODE OF ORDINANCES"; AND ADOPTING A RESOLUTION SETTING FORTH CITY COUNCIL RULES AND PROCEDURES FOR CITY COUNCIL MEETINGS AS PREVIOUSLY ESTABLISHED BY AND ENCOMPASSING RESOLUTION NUMBER 47-01 AND SECTION 2-29 OF THE CODE OF ORDINANCES; AND PROVIDING AN EFFECTIVE DATE.

WHEREAS, the City of Riviera Beach City Council desires to maintain an orderly process for City Council Meetings and to achieve this goal had previously set forth Rules of Procedure in Section 2-29 of The Code of Ordinances and in Resolution Number 47-01; and

WHEREAS, the City Council has determined that there existed possible duplications and/or conflicts and that it is in the best interests of the citizens and of the City of Riviera Beach to avoid such duplications and/or conflicts; and

WHEREAS, the City Council has determined that maintaining a single set of Rules of Procedure will prevent said duplications and/or conflicts and therefore all other provisions, whether ordinances and/or resolutions, with respect to said rules have been or will be repealed; and

WHEREAS, the City Council has further determined that it is in the best interest of the citizens and of the City of Riviera Beach to maintain flexibility with regard to its Rules of Procedure; and

WHEREAS, the City Council has determined that the best vehicle for accomplishing all the aforementioned goals is the adoption of a single Resolution setting forth the City Council Rules and Procedures for City Council Meetings.

NOW, THEREFORE, BE IT RESOLVED BY THE CITY COUNCIL OF THE CITY OF RIVIERA BEACH as follows:

Section 1. That Resolution Number 47-01 entitled "A Supplement To Section 2-29 Of The Code Of Ordinances" is hereby repealed in its

entirety.

Section 2. That the City Council hereby establishes the following Rules of Procedures for governing its council meetings.

Section 3. That said rules shall govern all future City Council meetings.

Section 4. This resolution shall take effect immediately upon its passage and approval.

PARLIAMENTARY PROCEDURE FOR CITY COUNCIL MEETINGS

If the current Rules of Procedure of the City Council are silent on the matter of parliamentary procedure, then the current edition of Robert's Rules of Order, newly revised, will govern the council in all cases to which they are applicable.

A. Regular Meetings

The regular meetings of the City Council shall be held in its chambers at 7:30 p.m., in the city hall, on each of the first and third Wednesdays of each month. If any Wednesday shall fall on a holiday, the city council may by motion set another date for such meeting or cancel the meeting for that particular Wednesday night. Announcement of such change or cancellation shall be made at least five days before such change at a regular meeting or in a newspaper of general circulation within the city. No regular meeting shall be held the fifth Wednesday of any month.

B. Special Meetings

Special meetings may be called from time to time by the Mayor or by two Members of the City Council and during the absence or disability of the Mayor, by the Chairperson of the City Council. The call for a special meeting shall be in writing and shall contain a statement of the business to be considered at such meeting, and no business shall be transacted at any special meeting not contained in such call unless approved by unanimous consent of the City Council present at such meeting. Notice shall be served by handing a copy of the notice or call of the meeting to each Council Member, or by leaving a copy at the Member's usual place of abode at least 24 hours prior to the time of holding such meeting, but any Council Member who is present at the meeting or has actual notice thereof may waive the formal notice. The call of each special meeting with proof of, or waiver of, service shall be entered

in the minutes of the meeting.

C. Agenda Order

The following agenda order shall be observed unless varied at a City Council meeting by affirmative vote of at least three Council Members present:

(1) Roll call.
(2) Invocation.
(3) Pledge of allegiance.
(4) Additions and deletions.
(5) Awards and presentations.
(6) Statements from members of the public (two-minute limitations for each speaker).
(7) Consent agenda:

a. Approval of minutes.
b. Approval of payment resolutions.
c. Petitions, communications, and correspondence for filing
d. Administrative requests.

(8) Ordinance on second and final reading.

a. Ordinance on first reading.
b. Items requested by the city manager.

(9) Recommendations and discussion from Mayor or Council Members.
(10) Adjournment.

D. Ordinances

1. No ordinance can be repealed, amended or the action thereof suspended except by another ordinance duly adopted and approved according to law.

2. An ordinance shall be recorded by the City Clerk in a book kept for that purpose. All motions and resolutions shall be entered in full upon the minutes of the meeting at which they are adopted.

3. Every ordinance passed by the City Council before becoming a law shall be presented to the Mayor under the certificate of the City Clerk for approval or disapproval. The City Clerk shall report the

in the minutes of the meeting.

C. Agenda Order

The following agenda order shall be observed unless varied at a City Council meeting by affirmative vote of at least three Council Members present:

(1) Roll call.
(2) Invocation.
(3) Pledge of allegiance.
(4) Additions and deletions.
(5) Awards and presentations.
(6) Statements from members of the public (two-minute limitations for each speaker).
(7) Consent agenda:

a. Approval of minutes.
b. Approval of payment resolutions.
c. Petitions, communications, and correspondence for filing
d. Administrative requests.

(8) Ordinance on second and final reading.

a. Ordinance on first reading.
b. Items requested by the city manager.

(9) Recommendations and discussion from Mayor or Council Members.
(10) Adjournment.

D. Ordinances

1. No ordinance can be repealed, amended or the action thereof suspended except by another ordinance duly adopted and approved according to law.

2. An ordinance shall be recorded by the City Clerk in a book kept for that purpose. All motions and resolutions shall be entered in full upon the minutes of the meeting at which they are adopted.

3. Every ordinance passed by the City Council before becoming a law shall be presented to the Mayor under the certificate of the City Clerk for approval or disapproval. The City Clerk shall report the

action of the Mayor to the City Council, and the action of the Mayor shall be entered upon the minutes of the City Council, but the failure to enter the Mayor's approval in the minutes shall not affect the validity of the ordinance. All ordinances approved by the Mayor or becoming a law without approval of the Mayor shall be promulgated without unnecessary delay by posting a copy of the same on the bulletin board of the city hall for a period of not less than ten days.

E. Communication with City Council

1. Any person may communicate with or petition the City Council on any matter relating to the city's affairs, but the City Council may require any such communication or petition to be reduced to writing. Persons wishing to address the City Council orally shall do so at such times as the City Council shall designate for that purpose.

2. Presentation of legal questions shall be submitted in writing ten days prior to city council meetings to the City Attorney in order that City Council may be advised.

F. Clean Air Act

No smoking will be allowed in the city council chambers during any city council meetings.

G. Mayor and City Council Members

1. The duties and responsibilities of the Mayor and City Council include, but are not limited to, upholding the public trust; demonstrating integrity, honesty and fairness; exercising fiduciary responsibility; and being responsive to the citizens of this community.

2. The Mayor and City Council Members should refrain from publicly berating, chastising, and making impertinent remarks to and/or about other Council Members and/or city staff persons.

H. City Council Chairperson

1. The Chairperson of the City Council shall be chosen from its members and shall perform the usual functions of a presiding officer. The Chairperson may be removed by the affirmative vote of not less than three-fifths of all the Members of the Council.

2. The Chairperson shall preside at all meetings when present. In

the absence of the Chairperson, a Chairperson Pro Tem shall preside, and in the absence of both officers, the meetings shall be called to order by the Clerk. If a quorum is present, the first business shall be the election of a Chairperson of the meeting who shall preside over such meeting. The City Council shall constitute a quorum for the transaction of business, but a smaller number may meet and adjourn from time to time.

3. The Chairperson shall call the meeting to order at the hour appointed for the meeting and, if a quorum be present, shall proceed with the order of business and adjourn when the business is deemed finished.

4. The Chairperson shall promote the efficient operation of the Council which shall include setting the full Council agenda (along with the City Manager) and expediting parliamentary debate or, if there is no objection from other members, expediting the passage of routine motions.

5. The Chairperson may speak to points of order, inquiry, or information and shall decide all questions of order. However, any Member dissatisfied with any of the Chairperson's decisions shall have the right to appeal the decision to the full Council. In all cases of appeal, the question shall be *"Shall the decision of the Chairperson be sustained?"* Any Council Member shall have the right to call for an aye and nay vote upon any such question, and when the aye and nay vote shall be ordered, the City Clerk shall call the roll of Council Members and record the vote of each member.

6. No member shall speak more than once on an appeal without the consent of a majority of the Council Members present. The decision in response to the appeal shall be by a majority vote of the Council Members present. In the case of a tie vote, the decision of the Chairperson shall stand.

7. While speaking on any question before the Council, the Chairperson shall have the right to turn the chair over to the Chair Pro Tem.

8. The Chairperson shall preserve order and decorum within the Chambers.

I. Motions

1. No motion shall be entertained or debated until duly seconded,

I. Motions

1. No motion shall be entertained or debated until duly seconded, if a second is necessary, and announced by the Chairperson.

2. Motions shall be recorded and, if desired by any Council Member, shall be read by the City Clerk before being debated.

3. If no Council Member objects, a motion may be withdrawn by the maker before amendment or action.

4. Motions shall be entertained in the order of precedence outlined in the then current edition of Robert's Rules of Order, newly revised. Motions to postpone or to commit a question to a date certain, having been decided, shall not be allowed again on the same day.

5. A motion to table an amendment shall not carry the main question with it unless so specified in the motion to table.

6. A motion to reconsider shall have precedence over every other motion except a motion to adjourn.

7. Motions to reconsider a vote upon amendments to any pending questions shall be made and decided immediately.

J. Debate

1. When a Council Member wishes to speak, the Member shall address the Chairperson and wait for recognition. When recognized, the Member shall, in a courteous manner, confine comments to the question under debate.

2. When two or more Council Members ask for recognition at the same time, the Chairperson will designate who shall speak first.

3. No Council Member shall impugn the motives of any other Member. The Chairperson may recommend the end of debate.

4. The previous question may be demanded by two Council Members in this form, *"Shall the main question be voted upon without further debate?"* When sustained by a majority of the Council Members present, the debate shall be ended.

5. Any Council Member may call for a division of the question, which shall be divided if it embraces subjects so distinct, that, one

K. Council Voting

1. Every Council Member present shall participate in the voting process for all actions before the full Council, except that Council Members must disqualify themselves from voting if disqualification is required by the State's Code of Ethics.

2. A roll call vote is required when voting on a final passage of Council Resolutions or Ordinances. A roll call vote on other business may be demanded by two Council Members present or by the Chairperson. In the case of a demand for roll call votes, the votes shall be recorded by the City Clerk in the Record of Proceedings.

3. In the event of a tie vote, the motion does not pass.

4. Abstentions are not allowed. Members not disqualified shall vote aye or nay.

5. When a Council Member present is not qualified to vote, the City Clerk shall record and announce, *"Present, but disqualified from voting."* When a Council member is present but does not vote and has not disqualified him/herself from voting, the City Clerk shall record and announce, "Present, but did not vote." Note: *(requires written explanation and submission to State of Florida as per state law).*

6. After the final vote on any motion, resolution, or ordinance and before adjournment of the full Council session, any Member who voted with the prevailing side may move for reconsideration except in cases where the motion is undebatable (e.g,. lay on the table). A second to the motion for reconsideration may be made from either the prevailing or non-prevailing side. A motion to reconsider may also be considered at the next regular City Council meeting.

L. City Council Meeting Agenda Items

1. **Regular Agenda Items:** Regular agenda items must be submitted to the City Manager's office thirteen days (13) prior to the date of the City Council meeting. The submittal deadlines are subject to change due to holidays, etc.

2. **Supplemental Agenda Items:** Any City Council Member with a supplemental agenda item which requires very limited staff input, shall provide the item in writing, together with any backup information, to the Chairperson, with a copy to the City Manager,

no later than 12:00 noon on the fourth business day preceding the City Council meeting. Emergency supplemental agenda items must be presented to the City Manager no later than 9:00 a.m. on the business day preceding the City Council meeting, and require the approval of at least three City Council Members before being placed on the agenda as an add-on item.

3. **Non-agenda Items:** A non-agenda item is defined as any item that is not on the printed agenda or any printed supplemental agenda. Non-agenda items shall be introduced only when deemed by the City Council Chairperson or another City Council Member to require urgent attention. A unanimous vote of the City Council shall be required to allow a non-agenda item to be placed on the agenda.

M. Agenda Review Meetings

1. The Council may hold, at its pleasure, Agenda Review meetings to discuss and receive information from staff on matters to appear before the Council at a regular Council meeting. Agenda Review meetings shall ordinarily be held at 5:00 p.m. on each Monday preceding a regular Council meeting, or, on the next day if the Monday is a holiday. However, the Council may cancel or change the date or time for this meeting at its pleasure. The Agenda Review meeting shall be open to the public. No binding votes may be taken at the Agenda Review meeting. Agendas of each Agenda Review meeting, listing items for which discussions is expected, will be made available to the general public. The public will not have an opportunity to participate in these meetings without prior approval of the Chairperson. There shall be no quorum requirement for the Agenda Review meetings.

2. Staff members possessing the most knowledge about the items to be discussed must be present at Agenda Review meetings. All department heads must be present at these meetings.

N. Rules of Procedure

1. Any of the foregoing rules may be suspended by unanimous vote of all Council Members present.

2. The rules of order of business may be amended from time to time by resolution by a majority of the City Council.

PASSED and APPROVED this 20th day of February, 2002.

APPROVED:

MICHAEL D. BROWN
MAYOR

EDWARD RODGERS
CHAIRPERSON

DAVID G. SCHNYER
CHAIRPERSON PRO TEM

(MUNICIPAL SEAL)

ATTEST:

DONALD R. WILSON

CARRIE E. WARD, CMC/AAE
CITY CLERK

SYLVIA LEE BLUE

ELIZABETH "LIZ" WADE
COUNCIL MEMBERS

MOTIONED BY: D. Schnyer

SECONDED BY: S. Blue

E. Rodgers aye

D. Schnyer aye

D. Wilson ___aye___

S. Blue ___aye___

E. Wade ___aye___

REVIEWED FOR LEGAL SUFFICIENCY

By:_____
City Attorney
City of Riviera Beach

Date:_____

CITY OF RIVIERA BEACH CITY COUNCIL
AGENDA ITEM SUMMARY

Meeting Date: 5/3/2017

Agenda Category: PUBLIC HEARING RESOLUTION

Subject: Authorize submittal of grant application for Land and Water Conservation Fund for Municipal Beach Improvements

---

Recommendation/Motion: Approve the submittal of the grant application to Florida Department of Environmental Protection for $200,000 for Municipal Beach Improvements. Authorize the City Manager and City Clerk to execute Grant application and Grant Agreement.

Originating Dept	Parks and Recreation	**Costs**	
User Dept.	Parks and Recreation	**Funding Source**	Grant award would be matched with department operating funds for Municipal Beach improvements
Advertised	No	**Budget Account Number**	
Date			
Paper			
Affected Parties	Not Required		

Background/Summary:

Staff has identified several areas of the Municipal Beach that need renovation, improvement or upgrade. Staff has also identified a funding source to assist with these items.

The Florida Department of Environmental Protections Land and Water Conservation Fund is a $200,000 grant program that requires a 100% match. Once awarded the grant allows three years to budget, match and complete the project.

The elements that would be renovated, improved or upgraded are:
1)replace the playground structures
2)replace and upgrade the pedestrian controls on the dune
3)replace the guard tower
4)replace the shower towers
5)replace water fountains/misters
6)replace the restroom fixtures
7)coat and seal the restroom floors
8)upgrade signage and life safety information boards

9)upgrade the sand volleyball courts
10) replace grills
11) Replace ADA beach wheelchair
These improvements will provide for long term enjoyment of the facility by residents and visitors and improve the function and aesthetics of the park.

Fiscal Years
Capital Expenditures
Operating Costs
External Revenues
Program Income (city)
In-kind Match (city)
Net Fiscal Impact
NO. Additional FTE Positions (cumulative)

III. Review Comments

A. Finance Department Comments:
Funds would need to be budgeted in subsequent operating budgets to provide the required match.

B. Purchasing/Intergovernmental Relations/Grants Comments:

C. Department Director Review:

Contract Start Date

Contract End Date

Renewal Start Date

Renewal End Date

Number of 12 month terms this renewal

Dollar Amount

Contractor Company Name

Contractor Contact

Contractor Address

Contractor Phone Number

Contractor Email

Type of Contract

Describe

ATTACHMENTS:

File Name	Description	Upload Date	Type
LWCF_resolution.doc	Grant Submittal Resolution	4/13/2017	Cover Memo
2017_LWCF_App__.pdf	2017 LWCF application	4/17/2017	Cover Memo

REVIEWERS:

Department	Reviewer	Action	Date
Recreation Park	Franks, Aladia	Approved	4/18/2017 - 10:10 AM
Purchasing	Mealy, Dean	Approved	4/18/2017 - 11:16 AM
Finance	sherman, randy	Approved	4/21/2017 - 3:09 PM
Attorney	Degraffenreidt, Andrew	Approved	4/24/2017 - 12:47 PM
City Clerk	Robinson, Claudene	Approved	4/24/2017 - 2:36 PM
City Manager	Evans, Jonathan	Approved	4/26/2017 - 6:06 PM

RESOLUTION NO. _____

A RESOLUTION OF THE CITY COUNCIL OF THE CITY OF RIVIERA BEACH, PALM BEACH COUNTY, FLORIDA AUTHORIZING THE SUBMITTAL OF A GRANT APPLICATION AND EXECUTION OF A GRANT AGREEMENT WITH THE FLORIDA DEPARTMENT OF ENVIRONMENTAL PROTECTION'S LAND AND WATER CONSERVATION FUND PROGRAM FOR RENOVATIONS AT THE MUNICIPAL BEACH PARK; AUTHORIZING THE CITY MANAGER TO EXECUTE THE APPLICATION; AUTHORIZING THE MAYOR AND CITY CLERK TO EXECUTE SAID AGREEMENT; AND PROVIDING AN EFFECTIVE DATE.

WHEREAS, the City of Riviera Beach has developed and maintained the Municipal Beach Park for many years, and

WHEREAS, the Municipal Beach Park is a valuable asset to the residents of and visitors to Riviera Beach for recreation, fishing, ocean access and tourism, and

WHEREAS, the City plans and programs for renovations and upgrades to the Municipal Beach Park, and

WHEREAS, staff has identified grant opportunities to assist with funding the renovations and upgrades at Municipal Beach Park in the amount of $200,000.00

NOW, THEREFORE, BE IT RESOLVED BY THE CITY COUNCIL OF THE CITY OF RIVIERA BEACH, FLORIDA THAT:

SECTION 1. The City Manager is hereby authorized to execute the grant submittals and for the Florida Department of Environmental Protection Land and Water Conservation Fund Program.

SECTION 2. That the Mayor and City Clerk is hereby authorized to execute the agreement for same.

SECTION 3. This Resolution shall take effect upon its passage and approval by the City Council.

PASSED AND APPROVED THIS _____ DAY OF _____, 2017.

APPROVED:

_____
THOMAS A. MASTERS
MAYOR

_____
KASHAMBA L. MILLER-ANDERSON
CHAIRPERSON

ATTEST:

_____
CLAUDENE L. ANTHONY
CERTIFIED MUNICIPAL CLERK
CITY CLERK

_____
TONYA DAVIS JOHNSON
CHAIR PRO TEM

_____
LYNNE L. HUBBARD
COUNCILPERSON

_____
DAWN S. PARDO
COUNCILPERSON

_____
TERENCE D. DAVIS
COUNCILPERSON

MOTIONED BY: _____

SECONDED BY: _____

L. HUBBARD _____

K. MILLER-ANDERSON _____

T. DAVIS JOHNSON _____

D. PARDO _____

T. DAVIS _____

REVIEWED AS TO LEGAL SUFFICIENCY

ANDREW DEGRAFFENREIDT
CITY ATTORNEY

DATE: _____

Florida Department of Environmental Protection

LAND AND WATER CONSERVATION FUND PROGRAM
GRANT APPLICATION PACKAGE

Required Signatures: **Adobe Signature**

(DEP USE ONLY)
Received:_____
Postmarked:

_____

Application Number:_____

PART I - GENERAL INFORMATION

A. APPLICANT INFORMATION

1. Name of Applicant: _____

2. Federal Employer Identification Number: _____
   (This number must be registered at **My Florida Market Place with the address the warrant will be forwarded)

3. DUNS Number: _____
   (Dunn and Bradstreet Data Universal Numbering System)

4. Population: _____
5. Current Operating budget: _____
   (This is the operating budget for the city, county or other legally constituted governmental entity, not just the department budget.)

6. Contact Person: _____ Title: _____
   (The contact person should be someone who will be in direct contact with DEP and is responsible for administering the grant if awarded.)

Address: Street/PO Box: _____
(Needs to be address registered in **My Florida Market Place** where warrant will be sent. If contact is different please specify.)

City/State: _____ Zip Code: _____

Telephone: ( )_____ FAX: ( )_____

E-mail: _____

I hereby certify that the information provided in this application is true and accurate. I further certify that I possess the authority to apply for this grant on behalf of the applicant.

_____ _____ _____
Signature of City or County Manager Title Date

B. PROJECT INFORMATION

1. Name of Project: _____
   a. List all previous projects name(s), phase(s) and grant number(s) funded at this specific project site location and reference funding source(s) (LWCF, FRDAP, RTP and FCT grant programs).

   1) _____

   2) _____

   3) _____

   4) _____ _____

2. Acreage of Project: _____

3. Project Type (Check One): Project cannot be a combination of acquisition and development
   Acquisition: _____
   Development: _____ On land owned by applicant
   _____ On land leased to applicant by another public agency
   Date lease expires: _____

Development projects must be under site control (owned by deed or leased from another public agency for a minimum of 25 years from application and renewable in perpetuity. Also, if property is owned by deed or leased from any state agency, provide a letter with permission to develop on the property) by the close of the submission period, _____ _____May 5, 2017_____. School board property is ineligible. Include a copy of the site control documents (e.g., deed, lease, etc.).

(Please Tab as Exhibit "L")

4. Project Location: Street Address: _____
   City _____ County _____ Zip Code: _____
   (If the project is not located in a city, list the city nearest to the project site.)

5. GIS Coordinates: Latitude: _____ Longitude: _____

   a) Submit a boundary map of the project area providing a description and sketch of the project area boundaries, display known easements and be legally sufficient to identify the project area. Also, depict where and how the public will access the site, parking, etc. Plat maps may be accepted if the above criteria are identified. Use either an 8 ½ x 11 or 11x17 map. **Aerial photographs are accepted as boundary maps, as long as the boundaries are identified.**
   (Tab as Exhibit "I")

   b) Submit color, on-site photographs for **all three copies** of your application, sufficient to depict the physical characteristics of the project area.
   (Tab as Exhibit "J")

   c) Location map and directions: Submit a detailed road map precisely locating the project site along with clear written driving instructions from the nearest federal or state highway. **NOTE:** Please confirm that street names listed are the same as those posted on street signs in the area. Please do not use Map Quest or any other computer mapping program for this.
   (Tab as Exhibit "K")

6. Legislative Districts in which the Project Site is located: These should be the districts in which the proposed project site is located. If you are not sure of the districts, contact your local office of the Supervisor of Elections.
   State Senator _____ Senate District Number _____

   State Representative _____ House District Number _____

7. Congressional District in which the project is located:
   U.S. Congressman _____ Congressional District Number _____

8. Describe the physical characteristics of the project.

1) For Development Projects:

(a) Provide a three (3) paragraph Project Narrative of the proposed project which includes existing and future uses, existing and proposed physical improvements, natural and historical resources, any proposed resource protection/conservation and any existing buildings on site.

(Tab as Exhibit "M")

(b) Please indicate if a natural spring is located on project site: _____Yes _____No

(c) Please indicate if there is public access to the park either through an existing street or easement: _____Yes _____No

Please describe access:

2) For Acquisition Projects: (in addition to the above information)

(a) If proposed project consist of acquiring multiple parcels or from multiple owners, identify specific order in which the parcels will be acquired to ensure that in the event that all parcels cannot be acquired, the purposes of the project can be achieved. Also, submit an estimated value of the property being acquired. (Ex. Tax accessed value)

(Tab as Exhibit "M")

C. FINANCIAL INFORMATION

Refer to Chapter 62D-5.070(6), F.A.C. for complete information on match requirements and match types. LWCF assistance is provided on a 50% matching basis. **Total Project Cost (Line F) must equal the grant request (Line A) plus the total local funds available (Line E). This figure (Line F) should not total more than $400,000 for the purpose of this application.**

1. LWCF Funds Requested: Line A $_____

2. Local Funds Available:
   a. Cash: Line B $_____

   b. In-Kind Line C $_____

   c. Land Value Line D $_____

(Only the value of **donated** real property is eligible as match **and applicant must NOT have taken title yet unless a waiver of retroactivity has been granted by DEP)**

Total Local Funds Available Line E $_____
Sum of lines B, C, and D

3. Total Cost of Proposed Project Line F $_____
Sum of lines A and E
(**Should not total more than $400,000)**

D. PROJECT ELEMENTS (COMPLETE FOR ALL PROJECTS, DEVELOPMENT AND ACQUISITION):

On page 7 & 8, list the Project Elements for this application. The Project Elements are listed with the related tasks and deliverables. Primary facilities and support facilities should be listed separately. Use as many project elements and tasks needed to complete the project.

Remember to include each element in your conceptual site plan. Submit a conceptual site plan displaying the areas and facilities to be developed as proposed on page 7 & 8 of this application. The site plan must correlate with the project boundary map and project elements. The site plan must CLEARLY DELINEATE using color codes between facilities/opportunities currently existing, facilities proposed for funding (page 7 & 8) in this application and facilities planned for future development. If project is an acquisition project, be sure to submit on the site plan the proposed elements to be developed as listed on page 18 of this application. Also identify different LWCF phases on the site plan and any FRDAP phases.

DEVELOPMENT PROJECTS:

PRIMARY RECREATION AREAS AND FACILITIES: Primary facilities include all recreation facilities and opportunities. **Primary cost must be equal to or greater than fifty percent (50%) of the total cost.** Primary examples are: beach access, picnic facilities, fishing piers, ball fields, tennis courts, trails, trailheads, shade structures for recreational facilities, etc. Enclosed structures are not eligible costs. Costs of planning and site preparation should be included within the cost of each element. If land value is used as match, it should be included under primary cost. If this is a trail project, list the uses or types of trails. If developing one trail for multi-purposes state multi-purpose trail, but if doing several different trails list separately with each use (example: walking trail or bike trail).

SUPPORT FACILITIES AND IMPROVEMENTS: Support facilities are facilities which cannot stand alone, or which would have little or no public outdoor recreational value without the primary facility. No enclosed structures are eligible except restrooms, bathhouses or restroom/concession stands. Other support examples are: parking, landscaping, and security lighting. Amenities such as benches, or bike racks will receive no points when being scored. The enclosed structures listed above cannot be phased and must be completed with one grant.

ACQUISITION PROJECTS:

If acquisition project, on page 7 & 8, list the Project Elements for the acquisition phase of the project.

(Tab as Exhibit "H")

Florida Department of Environmental Protection

LAND AND WATER CONSERVATION FUND PROGRAM
GRANT APPLICATION PACKAGE

Project Name: _____

Grantee Name: _____

The project reimbursement is limited to one (1) invoice upon completion of all Project Elements listed below and submittal of all Deliverables and required documentation identified in the table below. Completion Documentation required prior to Reimbursement Request.

Project Tasks, Deliverables and Required Documentation

Task #1: Development of: _____	**Amount of Costs to be Paid with Grant Funds**	**Amount of Costs to be Paid with Grantee Match**	**Deliverables and Documentation To Be Submitted Upon Completion And Before Reimbursement Can Be Approved**
(List each **Primary** facilities)	Provide Budget Detail	Provide Budget Detail	Project Completion Certification Final as-built site plan Florida Recreation and Parks Inventory Form Color Photographs of Project Notice of Limitation of Use Boundary Survey

(List each **Support** facilities) *All work will be completed in accordance with the approved plans.			
TOTALS:	**$**	**$**	

Performance Standard: Approval of deliverables is based upon review for compliance with the requirements for funding under the Land and Water Conservation Fund Program (LWCF); approved plans and application approved for funding.

INSTRUCTIONS FOR COMPLETING PROJECT WORK PLAN:

DELIVERABLES/ELEMENTS/WORK TO BE COMPLETED: Identify **ALL** elements that will be completed under this Agreement.

DELIVERABLE/ELEMENT BUDGET AMOUNT FOR REIMBURSEMENT: Must provide a budget for each element and identify the expense category and budget detail. Provide description of the costs as follows: **Salaries**: identify the position title, hourly rate and number of hours to complete the deliverable; **Fringe benefits:** identify the percentage used to calculate the fringe benefits; **Contractual Services:** identify what service will be paid for under the contract for services; **Equipment:** the purchase of equipment is not allowed under this Agreement, the rental of equipment is the only costs allowed that are associated with equipment; **Supplies and Materials:** identify what supplies/materials will be purchased; **Other** costs: identify what other costs are being requested (such as printing costs, other costs that do not fit into the other established cost categories (salaries, fringe benefits, equipment, supplies, indirect, contractual services); Indirect Costs: identify the percentage that is used for the indirect being claimed for reimbursement (cannot exceed 15% unless prior approval has been obtained by the Department)..

MATCH AMOUNT TO BE CLAIMED: The same level of detail must be provided for match as for reimbursement.

DOCUMENTATION/DELIVERABLES TO BE SUBMITTED UPON COMPLETION: All of these deliverables must be submitted before final reimbursement can be processed.

Completion Documentation required prior to Reimbursement

PART II – EVALUATION CRITERIA

A. GENERAL CRITERIA

1. CAPITAL IMPROVEMENT PLAN

A. Is the proposed project identified, in whole or in part, in the applicant's Capital Improvement Plan (CIP) or Schedule during the current or next three (3) fiscal years?
Provide:
1) A letter from the agency's city or county manager certifying the five-year capital improvement schedule is **officially adopted and date adopted. Project will not receive points if letter is not submitted and does not state the date CIP was adopted.**

-AND-

2) A copy of the five-year Capital Improvement Schedule included in the applicant's adopted Local Comprehensive Plan, stating project by name, amount and year (County or City budgets are not the same as Capital Improvement Schedules) **Highlight project name, amount and year.**

(Tab as Exhibit "A") (20 points)

_____Yes _____ No

-OR-

B. Is the proposed project identified as part of the plan through an adopted resolution committing the applicant to amend their Capital Improvement Plan or Schedule and complete the project should it receive program funds?
Provide:
1) A copy of a fully executed resolution amending the existing schedule to include the development of the proposed project. The resolution must **clearly indicate** the **development of the proposed project by name, year and amount, and <u>cannot be older than 3 years.</u>**

(Tab as Exhibit "A") (10 points)

_____Yes _____ No

2. STATE COMPREHENSIVE OUTDOOR RECREATION PLAN

A. Explain how the proposed project would address one or more of the issues, recommendations or goals identified in the State Comprehensive Outdoor Recreation Plan. **Use the OUTDOOR RECREATION IN FLORIDA - 2008 (Chapter 7 & 8). Provide quotations or other appropriate references with explanations to justify the correlation**. To receive points, must give a detailed explanation as to how the project meets the goals, cannot only list the goals.

(Tab as Exhibit "B") (4 points)

B. 2008 RELATIVE NEED INDEX BY REGION
Locate the applicant's region and circle each priority resource/facility need as **proposed in the project** cost on page 7 & 8 of this application which is included in the applicant's planning region:

(7 points)

___I Saltwater Beach Activities* Baseball or Softball * Picnicking *Football
Outdoor Swimming Pool Use * Saltwater Non-Boat Fishing * Golf
RV / Trailer Camping * Freshwater Boat Ramp Use * Soccer or Rugby

___II Saltwater Beach Activities * Nature Study * Historical or Archeological Sites
Baseball or Softball * Picnicking * Freshwater Boat Ramp Use * Football
Hunting * Horseback Riding * Outdoor Swimming Pool Use

___III Football * Picnicking * Nature Study * Soccer or Rugby * Baseball or Softball
Horseback Riding * Outdoor Basketball * RV / Trailer Camping
Freshwater Boat Ramp Use * Bicycle Riding – Unpaved Trails

___IV Historical or Archeological Sites * Baseball or Softball * Football
Saltwater Beach Activities * Picnicking * Outdoor Swimming Pool Use * Outdoor Basketball * Nature Study * Golf * Soccer or Rugby

___V Picnicking * Football * RV / Trailer Camping * Nature Study * Baseball or Softball
Bicycle Riding - Unpaved Trails * Outdoor Basketball * Soccer or Rugby
Horseback Riding * Outdoor Swimming Pool Use

___VI Picnicking * RV / Trailer Camping * Football * Baseball or Softball
Outdoor Swimming Pool Use * Nature Study * Historical or Archeological Sites
Outdoor Basketball * Saltwater Beach Activities * Soccer or Rugby

___VII RV / Trailer Camping * Picnicking * Baseball or Softball * Outdoor Swimming Pool Use
Nature Study * Freshwater Boat Ramp Use * Football * Golf * Horseback Riding
Outdoor Basketball

___VIII Picnicking * RV / Trailer Camping * Baseball or Softball * Football * Outdoor Swimming Pool Use*Saltwater Beach Activities * Golf * Outdoor Basketball * Outdoor Tennis * Soccer or Rugby

___IX Picnicking * RV / Trailer Camping * Saltwater Beach Activities * Outdoor Swimming Pool Use *Golf * Football * Nature Study * Baseball or Softball * Outdoor Tennis * Historical or Archeological Sites

___X Football * Golf * Baseball or Softball * Outdoor Swimming Pool Use * Picnicking * Outdoor Tennis*Saltwater Beach Activities * Outdoor Basketball * RV / Trailer Camping * Soccer or Rugby

___XI Outdoor Swimming Pool Use * Picnicking * Football * Baseball or Softball * Saltwater Beach Activities*Outdoor Tennis * Golf * Outdoor Basketball * Saltwater Non-Boat Fishing * RV / Trailer Camping

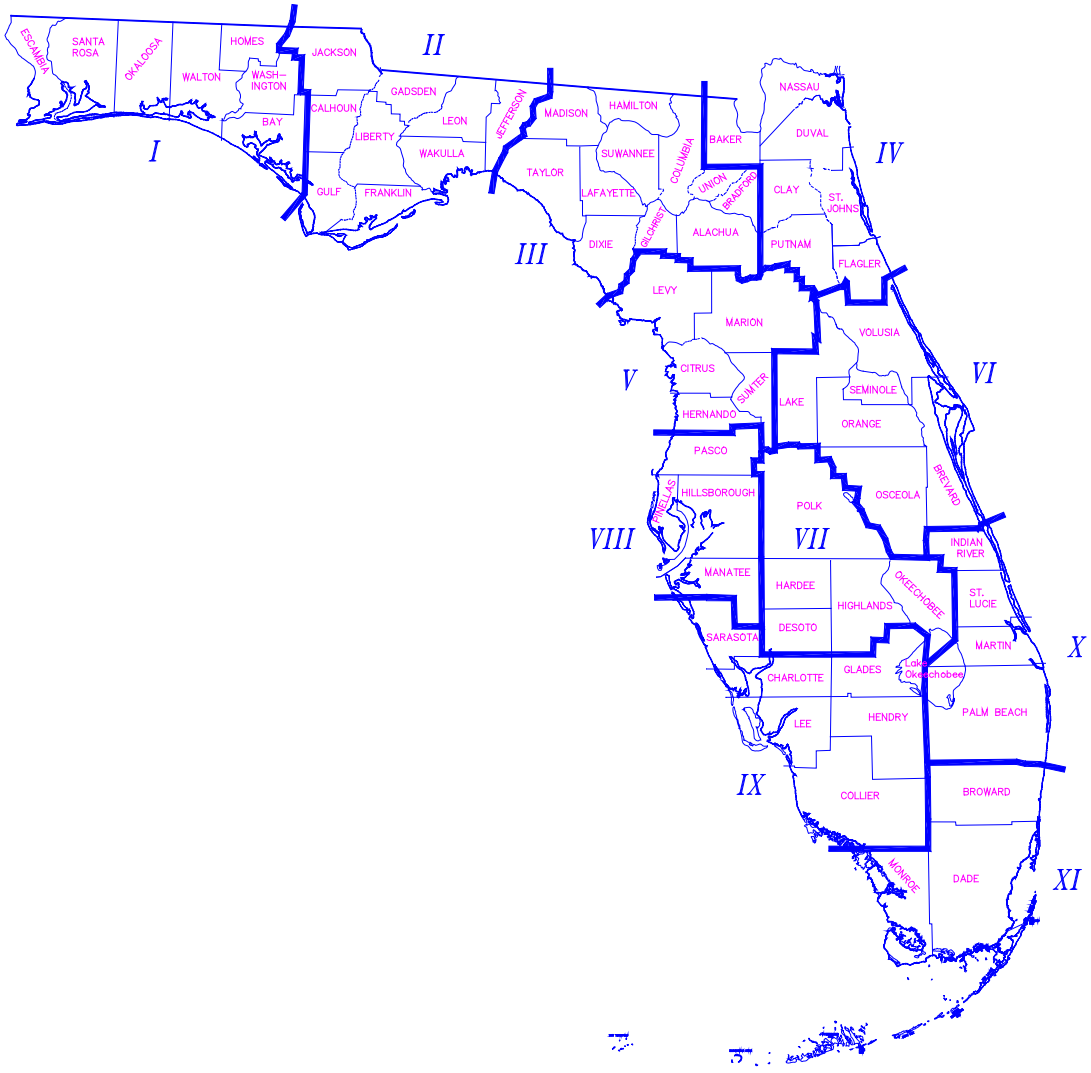

3. PUBLIC PARTICIPATION

Indicate which of the following apply **(Check ALL that apply)**:
(To receive points for this section any meetings, presentations, or surveys must be held in the current year or within the **previous 3 years** of application and each of **the three meetings must be held separately to receive each set of points. (Meetings also must be held prior to the application submittal.)**

_____A. A pre-advertised public meeting was held **solely** for the purpose of discussing the proposed project. Attach a copy of the ad **and** proof of publication for the advertisement. Advertisement needs to state where and when advertised. **If not advertised in a newspaper, a written explanation as to how, when and where advertised, along with a copy of notice/advertisement.**

(Tab as Exhibit "C-1") (10 points)

_____B. The project was discussed at a **regularly** scheduled meeting of the applicant's advisory board responsible for park, recreation and leisure service activities. Provide **a copy of the minutes** of the advisory board meeting(s) where **this project** was discussed. The board must be an appointed group of citizens, such as a parks and recreation advisory board, who would normally review projects similar to the proposed grant application. Planning and Zoning or similar boards may be used if a parks and recreation advisory board does not exist. **CITY OR COUNTY COMMISSIONS ARE NOT CONSIDERED ADVISORY BOARDS.**

(Tab as Exhibit "C-2") (7 points)

_____ C. Public input on the proposed project was obtained through presentations to community organizations, neighborhood associations and/or a written opinion survey. Provide documentation (**dated minutes from the meeting** where the project was discussed, or a thank-**you letter** from an organization, association, etc.) showing that presentations **regarding this project** were made to community organizations or groups **OR** provide a **copy of the survey, who surveyed, AND a summary of the results.** Letters of support are not acceptable to receive points.

(Tab as Exhibit "C-3") (4 points)

4. LINEAR PARK

The proposed project is for linear park purposes. A linear park is defined as an active or passive outdoor recreation area of linear design that provides or connects recreation, park land, or open-space areas.

_____ Yes _____ No **(13 points)**

5. PRESERVATION PURPOSES

The proposed project is also for preservation purposes (e.g. historical, archaeological, cultural etc.). This question addresses preservation of historic, archaeological and/or cultural sites. Contact the Department of State at (850) 245-6333 if this applies to the proposed project. A letter from the Department of State is required to verify a **"yes"** response to this question.

(Tab as Exhibit "D") (7 points)

_____ Yes _____ No

6. OPERATION AND MAINTENANCE

Capability to develop, operate and maintain the project site. Provide a brief description of how development, programming and maintenance will be provided **AND** an agency organizational chart **(Must provide both to receive points)**:

(Check ONLY one)

_____ The applicant has a full-time recreation or park department staffed to provide facility development, programming and maintenance.

(Tab as Exhibit "E") (8 points)

_____ The applicant has demonstrated the existence of a full-time ability to provide facility development, programming and maintenance.

(Tab as Exhibit "E") (4 points)

B. DEVELOPMENT CRITERIA (COMPLETE ONLY FOR DEVELOPMENT PROJECTS)

1. NEW DEVELOPMENT

List the existing facilities/improvements on the project site. Include improvements such as baseball fields, basketball courts, trails, boat ramps, etc. (Bullet lists are encouraged. If undeveloped, state none).

(5 points, if undeveloped)

2. NEW FACILITIES OR OPPORTUNITIES (Check only one)

The project provides for new or additional development of recreational facilities and opportunities:

_____ 3 or more facilities or opportunities **(15 points)**

_____ 2 facilities or opportunities **(10 points)**

_____ 1 facility or opportunity **(5 points)**

3. RENOVATION OF EXISTING FACILITIES (Check only one)

The project provides renovation of existing recreational facilities for:

_____ 3 or more facilities **(13 points)**

_____ 2 facilities **(9 points)**

_____ 1 facility **(4 points)**

4. SUPPORT FACILITIES

The project provides new or renovated support facilities (i.e. parking, restrooms, utilities).

(15 points)

_____ Yes _____ No

5. ACCESS TO WATER RESOURCES

The project provides developed pedestrian access to or along water resources (i.e. trails, boardwalks, dune walkovers, etc.)

(7 points)

_____ Yes _____ No

6. USE OF WATER RESOURCES

The project provides facilities for recreational use of water resources (boat ramps, swimming docks, fishing piers, etc.).

(12 points)

_____ Yes _____ No

7. INFRASTRUCTURE ASSESSMENT OF LOCAL GOVERNMENT RECREATION AND PARK DEPARTMENT FACILITY NEEDS IN THE STATE OF FLORIDA

A. List the facilities provided by the project which are identified in the priority ranked index clusters of outdoor facilities needs for renovation and/or new construction identified within the applicant's population density as set forth in the Department's study. The study entitled **"Infrastructure Assessment of Local Government Recreation and Park Department Facility Needs in the State of Florida"** has an effective date of December 1995. (See attached pages 21-25 for Priority Ranked Index Clusters.

(12 points)

B. The proposed project, in whole or in part, addresses the highest priority of infrastructure funding needs for the applicant's population density as set forth in the study titled **"Infrastructure Assessment of Local Government Recreation and Park Department Facility Needs in the State of Florida"** has an effective date of December 1995. Use the table below to determine in which priority funding need ranking the project falls. **(Check ONLY one)**:

_____Highest Priority Funding Need **(13 points)**

_____Second Highest Priority Funding Need **(8 points)**

Population Density 1 - Population Under 10,000	
Rank	**Funding**
1	Construction
2	Renovation
Population Density 2 - Population 10,000 to 24,999	
Rank	**Funding**
1	Renovation
2	Construction
Population Density 3 - Population 25,000 to 49,999	
Rank	**Funding**
1	Construction
2	Renovation
Population Density 4 - Population 50,000 to 99,999	
Rank	**Funding**
1	Construction
2	Renovation
Population Density 5 - Population 100,000 and Over	
Rank	**Funding**
1	Renovation
2	Construction

Source: The 1995 Infrastructure Assessment of Local Government Recreation and Park Department Facility Needs in the State of Florida

C. ACQUISITION CRITERIA (COMPLETE ONLY FOR ACQUISITION PROJECTS)

1. FLORIDA NATURAL AREAS INVENTORY

The project provides protection of any resources in the Florida Natural Areas Inventory. List the protected resources below and provide a letter from the Florida Natural Areas Inventory (FNAI). (850) 224-8207

(Tab as Exhibit "F") (13 points)

_____ Yes _____ No

2. WATER FRONTAGE

The project provides frontage on wetlands or water bodies such as rivers, lakes or oceans.

_____ Yes _____ No **(6 points)**

3. INFRASTRUCTURE ASSESSMENT OF LOCAL GOVERNMENT RECREATION AND PARK DEPARTMENT FACILITY NEEDS IN THE STATE OF FLORIDA

List all the facilities which will be developed for this project. Only facilities identified in the top three priority ranked index clusters of outdoor facilities needs for new construction identified within the applicant's population density as set forth in the Department's study entitled "Infrastructure Assessment of Local Government Recreation and Park Department Facility Needs in the State of Florida", effective December 1995, will receive these points. (Priority ranked index clusters are attached as pages 19-23). **Along with the site plan submitted in Exhibit H, submit a timeline for the planned development of the acquisition project.**

(Tab as Exhibit "H") (15 points)

4. **NEEDED RECREATIONAL ACREAGE:** (Provide excerpts from your local comprehensive plan. Include data on current park acreage, standards and identified needs.)

A. Describe how the project provides for identified need(s) for additional park acreage pursuant to the applicant's adopted local comprehensive plan. Provide the needed amount of acreage as listed in the local comprehensive plan and the total acreage the local government already has under its control.

_____Needed acres/Person and _____Total Acreage Under Local Control
Provide a copy of the applicant's local comprehensive plan as supporting back-up documentation and **highlight** the information that pertains to this section.

(Tab as Exhibit "G") (15 points)

B. Describe how the project provides for needed distribution of park acreage pursuant to the applicant's adopted local comprehensive plan.

(8 points)

5. CAPITAL IMPROVEMENT PLAN

A. Is the proposed **development** of the property identified in the applicant's Capital Improvement Plan (CIP) or Schedule during the current or next three (3) fiscal years?
Provide:

1) A letter from the agency's city or county manager certifying the five-year Capital Improvement Schedule is officially adopted and date adopted. **Project will not receive points if letter is not submitted and does not state the date CIP was adopted.**

-AND-

2) A copy of the five-year Capital Improvement Schedule included in the applicant's adopted Local Comprehensive Plan, stating project by name, amount and year (County or City budgets are not the same as Capital Improvement Schedules) **Highlight project name, amount and year.**

(Tab as Exhibit "A") (6 points)

_____ Yes _____ No

-OR-

B. Is the proposed **development** of the property included as part of the plan through an adopted resolution committing the applicant to amend their CIP and develop the property should it receive program funds?

Provide: **A** copy of a fully executed resolution amending the existing schedule to include the development of the proposed project. The resolution must **clearly indicate** the **development of the proposed project by name, year, and amount and cannot be older than 3 years.**

_____ Yes _____ No

(Tab as Exhibit "A") (3 points)

Outdoor Facility Needs Ranked by Priority Index: Population Density 1

Rank	Renovation	Construction	
	Facility	Facility	
1	Playgrounds	Baseball Fields	**Cluster I**
2	Support Facilities	Softball Fields	
3	Tennis Courts	Playgrounds	**Cluster II**
4	Rest Rooms	Rest Rooms	
5	Picnic Facilities	Support Facilities	
6	Baseball Fields	Soccer Fields	
7	Basketball Courts	Basketball Courts	**Cluster III**
8	Softball Fields	Bike Trails	
9	Swimming Pools	Swimming Pools	
10	Boating Facilities	Tennis Courts	
11	Fishing Piers	Picnic Facilities	
12	Camping	Handball Courts	
13	Handball Courts	Fishing Piers	**Cluster IV**
14	Football Fields	Football Fields	
15	Soccer Fields	Boating Facilities	
16	Beach Access	Exercise Trails	
17	Historical Facilities	Camping	
18	Shuffleboard Courts	Beach Access	**Cluster V**
19	Nature Trails	Historical Facilities	
20	Other	Shuffleboard Courts	
21	Golf Courses	Nature Trails	
22	Bike Trails	Golf Courses	
23	Exercise Trails	Hiking Trails	
24	Hiking Trails	Horse Trails	**Cluster VI**
25	Horse Trails	Other	

Population Density 1 - Population for under 10,000

Outdoor Facility Needs Ranked by Priority Index: Population Density 2

Rank	Renovation	Construction	
	Facility	Facility	
1	Rest Rooms	Support Facilities	**Cluster I**
2	Support Facilities	Rest Rooms	
3	Playgrounds	Playgrounds	
4	Baseball Fields	Softball Fields	
5	Tennis Courts	Soccer Fields	**Cluster II**
6	Softball Fields	Baseball Fields	
7	Basketball Courts	Basketball Courts	
8	Boating Facilities	Picnic Facilities	**Cluster III**
9	Swimming Pools	Swimming Pools	
10	Picnic Facilities	Football Fields	
11	Soccer Fields	Tennis Courts	
12	Exercise Trails	Handball Courts	
13	Football Fields	Nature Trails	**Cluster IV**
14	Shuffleboard Courts	Bike Trails	
15	Handball Courts	Boating Facilities	
16	Beach Access	Other	
17	Fishing Piers	Exercise Trails	
18	Camping	Golf Courses	**Cluster V**
19	Bike Trails	Hiking Trails	
20	Nature Trails	Fishing Piers	
21	Other	Camping	
22	Golf Courses	Beach Access	
23	Hiking Trails	Historical Facilities	
24	Historical Facilities	Horse Trails	**Cluster VI**
25	Horse Trails	Shuffleboard Courts	

Population Density 2 – Population from 10,000 to 24,999

Outdoor Facility Needs Ranked by Priority Index: Population Density 3

Rank	Renovation	Construction	
	Facility	Facility	
1	Rest Rooms	Baseball Fields	**Cluster I**
2	Playgrounds	Soccer Fields	
3	Support Facilities	Support Facilities	
4	Tennis Courts	Softball Fields	**Cluster II**
5	Baseball Fields	Playgrounds	
6	Basketball Courts	Boating Facilities	
7	Beach Access	Football Fields	
8	Swimming Pools	Tennis Courts	**Cluster III**
9	Soccer Fields	Rest Rooms	
10	Picnic Facilities	Picnic Facilities	
11	Football Fields	Basketball Courts	
12	Softball Fields	Other	**Cluster IV**
13	Boating Facilities	Exercise Trails	
14	Exercise Trails	Bike Trails	
15	Handball Courts	Nature Trails	
16	Other	Camping	
17	Golf Courses	Handball Courts	
18	Shuffleboard Courts	Historical Facilities	**Cluster V**
19	Fishing Piers	Swimming Pools	
20	Bike Trails	Hiking Trails	
21	Hiking Trails	Golf Courses	
22	Nature Trails	Beach Access	
23	Camping	Fishing Piers	
24	Historical Facilities	Horse Trails	**Cluster VI**
25	Horse Trails	Shuffleboard Courts	

Population Density 3 - Population from 25,000 to 49,999

Outdoor Facility Needs Ranked by Priority Index: Population Density 4

Rank	Renovation	Construction	
	Facility	Facility	
1	Playgrounds	Soccer Fields	**Cluster I**
2	Rest Rooms	Playgrounds	
3	Support Facilities	Picnic Facilities	**Cluster II**
4	Tennis Courts	Baseball Fields	
5	Soccer Fields	Support Facilities	
6	Baseball Fields	Swimming Pools	
7	Swimming Pools	Softball Fields	
8	Exercise Trails	Basketball Courts	**Cluster III**
9	Softball Fields	Rest Rooms	
10	Basketball Courts	Other	
11	Handball Courts	Exercise Trails	**Cluster IV**
12	Picnic Facilities	Golf Courses	
13	Boating Facilities	Tennis Courts	
14	Beach Access	Boating Facilities	
15	Fishing Piers	Fishing Piers	
16	Shuffleboard Courts	Football Fields	
17	Football Fields	Handball Courts	
18	Golf Courses	Bike Trails	**Cluster V**
19	Nature Trails	Nature Trails	
20	Other	Hiking Trails	
21	Bike Trails	Horse Trails	
22	Camping	Beach Access	
23	Hiking Trails	Camping	
24	Historical Facilities	Historical Facilities	**Cluster VI**
25	Horse Trails	Shuffleboard Courts	

Population Density 4 - Population from 50,000 to 99,999

Outdoor Facility Needs Ranked by Priority Index: Population Density 5

Rank	Renovation	Construction	
	Facility	Facility	
1	Support Facilities	Support Facilities	**Cluster I**
2	Rest Rooms	Baseball Fields	**Cluster II**
3	Playgrounds	Playgrounds	
4	Tennis Courts	Softball Fields	
5	Swimming Pools	Rest Rooms	**Cluster III**
6	Boating Facilities	Soccer Fields	
7	Basketball Courts	Picnic Facilities	
8	Golf Courses	Bike Trails	
9	Softball Fields	Swimming Pools	
10	Picnic Facilities	Exercise Trails	
11	Historical Facilities	Hiking Trails	**Cluster IV**
12	Baseball Fields	Other	
13	Fishing Piers	Golf Courses	
14	Exercise Trails	Camping	
15	Soccer Fields	Beach Access	
16	Handball Courts	Historical Facilities	
17	Camping	Tennis Courts	
18	Football Fields	Basketball Courts	**Cluster V**
19	Nature Trails	Boating Facilities	
20	Beach Access	Fishing Piers	
21	Bike Trails	Football Fields	
22	Other	Nature Trails	
23	Hiking Trails	Handball Courts	
24	Horse Trails	Horse Trails	**Cluster VI**
25	Shuffleboard Courts	Shuffleboard Courts	

Population Density 5 - Population for 100,000 & Over

Note: Please fill out the forms, save, print and attach to the application, if not attached the project will be deemed ineligible, this is required information provided by the National Park Service to proceed with federal funding.

NEW FEDERALWEBSITE ADDRESS

DO NOT PROCEED to the federal website:
https://www.nps.gov/subjects/lwcf/lwcf-forms.htm
to Complete the LWCF Proposal Description and Environmental Screening Form (PD/ESF)
without reading these INSTRUCTIONS FIRST:

Complete the listed information only for the PD/ESF form:

1. Cover Page
2. Step 1
3. Step 2 (DO NOT Complete Section C)
4. Step 2 (Complete all of Section D)
5. Proceed to Steps 5 – 7*
6. Fill out Federal form 424A for Acquisition Projects Reference Instructions, if needed
7. Fill out Federal form 424C for Construction Projects Reference Instructions, if needed

*If on Step 7 you check CE, you must provide # and an explanation.

(Tab as Exhibit "N")

CONTACT FOR ADDITIONAL INFORMATION:

Contact	Phone
A. LWCF Application Information & Help	850/245-2501
B. LWCF Administrative Rule www.dep.state.fl.us/parks/oirs	850/245-2501
C. Statewide Comprehensive Outdoor Recreation Plan (SCORP) www.dep.state.fl.us/parks/planning	850/245-3051
D. State Lands, Bureau of Appraisal	850/245-2555
E. Recreation Accessibility and Safety Program Manager, Florida Park Service	850/245-3031
F. Office of Greenways & Trails and the Florida Statewide Greenways & Trails Plan	850/245-2052

ATTACHMENT

LAND AND WATER CONSERVATION FUND PROGRAM (LWCF)
GRANT APPLICATION PACKET

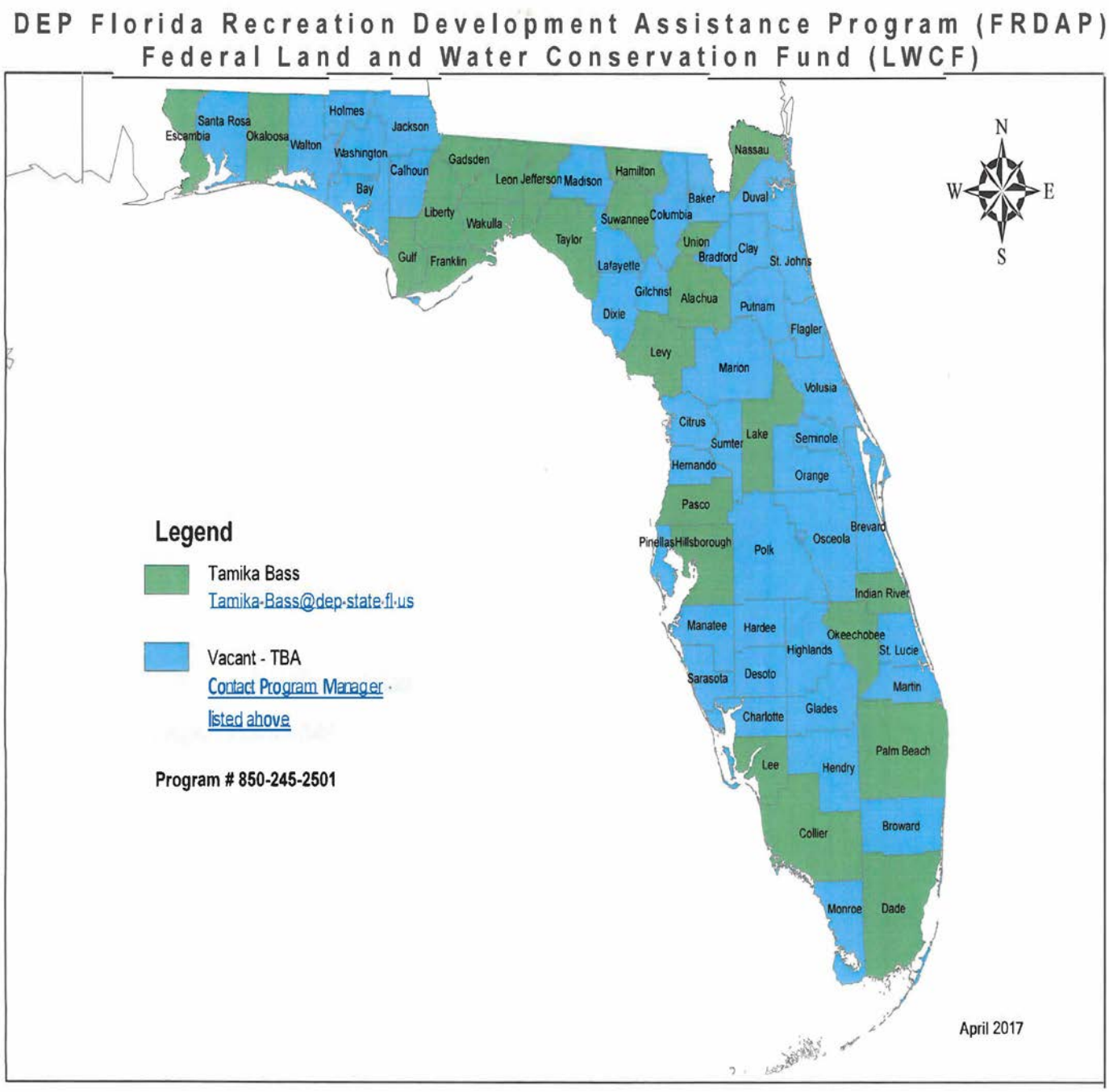

CITY OF RIVIERA BEACH CITY COUNCIL
AGENDA ITEM SUMMARY

Meeting Date: 5/3/2017

Agenda Category: PUBLIC HEARING RESOLUTION

Subject: A RESOLUTION OF THE CITY COUNCIL OF THE CITY OF RIVIERA BEACH, PALM BEACH COUNTY, FLORIDA, APPROVING AN APPLICATION FROM THE EQUITAS MANAGEMENT GROUP, LLC. AND THOMAS ENGINEERING GROUP, LLC. FOR SITE PLAN APPROVAL TO DEVELOP A SINGLE STORY 8,247 SQUARE FOOT RETAIL BUILDING ON 0.92 ACRE OF 1.93 ACRES OF VACANT COMMERCIAL LAND LOCATED AT PARCEL CONTROL NUMBER 56-43-42-28-31-015-0010; AND PROVIDING FOR AN EFFECTIVE DATE.

Recommendation/Motion: Staff is recommending the City Council to consider the information presented and the applicant's request for site plan approval.

Originating Dept	Community Development	**Costs**	$261.44
User Dept.	Community Development	**Funding Source**	
Advertised	Yes	**Budget Account Number**	
Date	4/19/17		
Paper	Palm Beach Post		
Affected Parties	Notified		

Background/Summary:

Shimonovitc Shraga F Trust owns the property referenced as Parcel Control Number 56-43-42-28-31-015-0010, which is a vacant commercial 1.93 acres parcel. Shimonovitc Shraga F Trust has authorized Equitas Management Group, LLC. and Thomas Engineering Group, LLC. to serve as the authorized agent for the parcel at Parcel Control Number 56-43-42-28-31-015-0010.

On September 29, 2016, Equitas Management Group, LLC. and Thomas Engineering Group, LLC. submitted the official Site Plan application (SP-16-16) to Staff. City Departmental Staff reviewed the Site Plan application and provided corresponding comments to the applicant. All comments were addressed by the applicant and City Staff has no objections to the Site Plan application.

To facilitate the development proposal by Equitas Management Group, LLC. and Thomas Engineering Group, LLC., the applicant is also requesting a re-plat approval (PA-16-05) of the parcel at Parcel Control Number 56-43-42-28-31-015-0010 (0.92 acre will be used for the proposed 8,247 square feet retail building and the remaining 1.01 acres will be used for future development that’s consistent with and compatible to the uses permitted within the General Commercial (CG) Zoning District and Commercial (COM) Future Land Use District).

The Community Development Department reviewed the Site Plan application (SP-16-16) for compatibility and consistency with the City's Comprehensive Plan and Land Development Regulations and found that the proposed plan was in compliance. There were no departmental (police, utilities, engineering, and fire departments) objections by Staff.

On April 13, 2017, the City's Planning and Zoning Board held a public meeting to discuss Equitas Management Group, LLC. and Thomas Engineering Group, LLC. Site Plan Application (SP-16-16). The Planning and Zoning Board recommended approval of the SP-16-16 Site Plan Application to City Council by a vote of 3 to 1, with Board Member Sheppard dissenting.

Fiscal Years

Capital Expenditures

Operating Costs

External Revenues

Program Income (city)

In-kind Match (city)

Net Fiscal Impact

NO. Additional FTE Positions (cumulative)

III. Review Comments

A. Finance Department Comments:

B. Purchasing/Intergovernmental Relations/Grants Comments:

C. Department Director Review:

Contract Start Date

Contract End Date

Renewal Start Date

Renewal End Date

Number of 12 month terms this renewal

Dollar Amount

Contractor Company Name

Contractor Contact

Contractor Address

Contractor Phone Number

Contractor Email

Type of Contract

Describe

ATTACHMENTS:

File Name	Description	Upload Date	Type
Resolution_Equitas_Retail_Store_SP-16-16.pdf	Resolution - Equitas Management Group LLC Site Plan (SP-16-16)	4/17/2017	Resolution
C-03_SITE_PLAN_revised.pdf	Exhibit A Equitas Management Group Site Plan	4/17/2017	Exhibit
Landscape.pdf	Exhibit B Equitas Management Group Landscape Plan	4/17/2017	Exhibit
2016-069_Exterior_Elevations.pdf	Exhibit C Equitas Management Group Elevations	4/17/2017	Exhibit
Map_Request_Equitas_Retail_site_location_map.pdf	Equitas Management Group Site Location Map	4/17/2017	Backup Material
Map_Request_Equitas_Retail_aerial_map.pdf	Equitas Management Group Aerial Map	4/17/2017	Backup Material
Uniform_Land_Use_applicaiton_and_project_narrative.pdf	Equitas Management Group Uniform Land Use Application and Narrative	4/17/2017	Backup Material
Staff_Comments_(SP-16-16)_Equitas_Retail_Store_1st_round_of_comments.pdf	Staff comments - 1st round of comments	4/17/2017	Backup Material
Staff_Comments_(SP-16-16)_Equitas_Retail_Store_2nd_round_of_comments.pdf	Staff comments - 2nd round of comments	4/17/2017	Backup Material
Palm_Beach_county_TPS_review_161211_Avenue_L_Retail_03-14-17.pdf	Palm Beach County Transportation Performance Standards review	4/17/2017	Backup Material
Traffic_Study_-_March_2017.pdf	Equitas Management Group Traffic Study	4/17/2017	Backup Material
Equitas_Management_Group_LLC_SP-16-16_Staff_Report_3_23_2017.pdf	P&Z Staff report	4/17/2017	Backup Material
Legal_ad_for_May32017_City_Council_meeting.pdf	Legal ad	4/17/2017	Backup Material

REVIEWERS:

Department	Reviewer	Action	Date
			4/20/2017 - 10:35

Community Development	Bailey, Terrance	Approved	AM

RESOLUTION NO. _____

A RESOLUTION OF THE CITY COUNCIL OF THE CITY OF RIVIERA BEACH, PALM BEACH COUNTY, FLORIDA, APPROVING AN APPLICATION FROM THE EQUITAS MANAGEMENT GROUP, LLC. AND THOMAS ENGINEERING GROUP, LLC. FOR SITE PLAN APPROVAL TO DEVELOP A SINGLE STORY 8,247 SQUARE FOOT RETAIL BUILDING ON 0.92 ACRE OF 1.93 ACRES OF VACANT COMMERCIAL LAND LOCATED AT PARCEL CONTROL NUMBER 56-43-42-28-31-015-0010; AND PROVIDING FOR AN EFFECTIVE DATE.

WHEREAS, the property referenced by Parcel Control Number 56-43-42-28-31-015-0010 is approximately 1.93 acres and owned by Shimonovitc Shraga F Trust; and

WHEREAS, Shimonovitc Shraga F Trust has authorized Equitas Management Group, LLC. and Thomas Engineering Group, LLC. to serve as the authorized agent for the parcel at Parcel Control Number 56-43-42-28-31-015-0010; and

WHEREAS, the Equitas Management Group, LLC. and Thomas Engineering Group, LLC. desire to develop a single story 8,247 square foot retail building on 0.92 acre of the 1.93 acres of vacant commercial land on Parcel Control Number 56-43-42-28-31-015-0010; and

WHEREAS, City Staff has determined that the Equitas Management Group, LLC. and Thomas Engineering Group, LLC. development proposal is consistent with and compatible to the City's Comprehensive Plan and Land Development Regulations; and

WHEREAS, on April 13, 2017, the City's Planning and Zoning Board held a public meeting to discuss the Equitas Management Group, LLC. and Thomas Engineering Group, LLC. site plan application proposal and recommended approval of the proposed site plan application proposal by a 3 to 1 vote, with Board member Sheppard dissenting; and

WHEREAS, the City Council desires to approve the site plan application and plans for Equitas Management Group, LLC. and Thomas Engineering Group, LLC. to develop a single story 8,247 square foot retail building on 0.92 acre of the 1.93 acres of vacant commercial land on Parcel Control Number 56-43-42-28-31-015-0010.

NOW, THEREFORE, BE IT RESOLVED BY THE CITY COUNCIL OF THE CITY OF RIVIERA BEACH, PALM BEACH COUNTY, FLORIDA, AS FOLLOWS:

SECTION 1. The City Council hereby finds that the site plan application to develop and operate a single story 8,247 square foot retail building on 0.92 acre of the 1.93 acres of vacant commercial land on Parcel Control Number 56-43-42-28-31-015-

0010 is consistent with and compatible to the City's Comprehensive Plan and Land Development Regulations.

SECTION 2. The City Council hereby approves the aforementioned application from Equitas Management Group, LLC. and Thomas Engineering Group, LLC. for site plan approval with the following conditions:

1. A two-year landscaping performance bond for 110% of the value of landscaping and irrigation shall be required before the certificate of occupancy is issued by the City.

2. Construction must be initiated within 18 months of the effective date of this Resolution in accordance with Section 31-60(b), of the City Code of Ordinances. Demolition, site preparation and/or land clearing shall not be considered construction. Building permit application and associated plans and documents shall be submitted in its entirety and shall not be accepted by City staff in a partial or incomplete manner.

3. All future advertising must state that the development is located in the City of Riviera Beach. Fees and penalties in accordance with City Code Sec. 31-554 will be levied against the property owner and/or business for violation of this condition.

4. This development must receive final Certificate of Occupancy from the City for all buildings and units approved within five years of the approval of this resolution or the resolution shall be considered null and void, requiring the applicant to resubmit site plan fees and application for site plan and special exception approval and re-initiate the site plan and special exception approval process.

5. Once approved, this Resolution shall supersede any previous site plan approval resolutions associated with this property, causing previous site plan and special exception approval resolutions to be null and void.

6. City council authorizes City staff to approve future amendments to this site plan administratively so long as the site plan does not deviate greater than 5% from the originally approved site plan.

SECTION 3. The associated site plan, landscape plan, and building elevations are attached hereto and made a part of this Resolution as Exhibit "A", "B", and "C".

SECTION 4. Should any one or more of the provisions or element of this Resolution be held invalid, such provision or element shall be null and void, and shall be deemed separate from the remaining provisions or elements and shall in no way affect the validity of any of the remaining provisions or elements of this resolution.

<u>SECTION 5.</u> This Resolution shall take effect immediately upon approval.

PASSED and APPROVED this _____day of _____, 2017.

[REMAINDER OF PAGE INTENTIONALLY BLANK]

APPROVED:

_____
THOMAS A. MASTERS
MAYOR

_____
TERENCE D. DAVIS
CHAIRPERSON

ATTEST:

_____
CLAUDENE L. ANTHONY
CERTIFIED MUNICIPAL CLERK
CITY CLERK

_____
KASHAMBA MILLER-ANDERSON
CHAIR PRO TEM

_____
LYNNE L. HUBBARD
COUNCILPERSON

_____
TONYA DAVIS JOHNSON
COUNCILPERSON

_____
DAWN S. PARDO
COUNCILPERSON

MOTIONED BY: _____

SECONDED BY: _____

L. HUBBARD _____

K. MILLER-ANDERSON _____

T. DAVIS JOHNSON _____

D. PARDO _____

T. DAVIS _____

REVIEWED AS TO LEGAL SUFFICIENCY

ANDREW DEGRAFFENREIDT
CITY ATTORNEY

DATE: _____

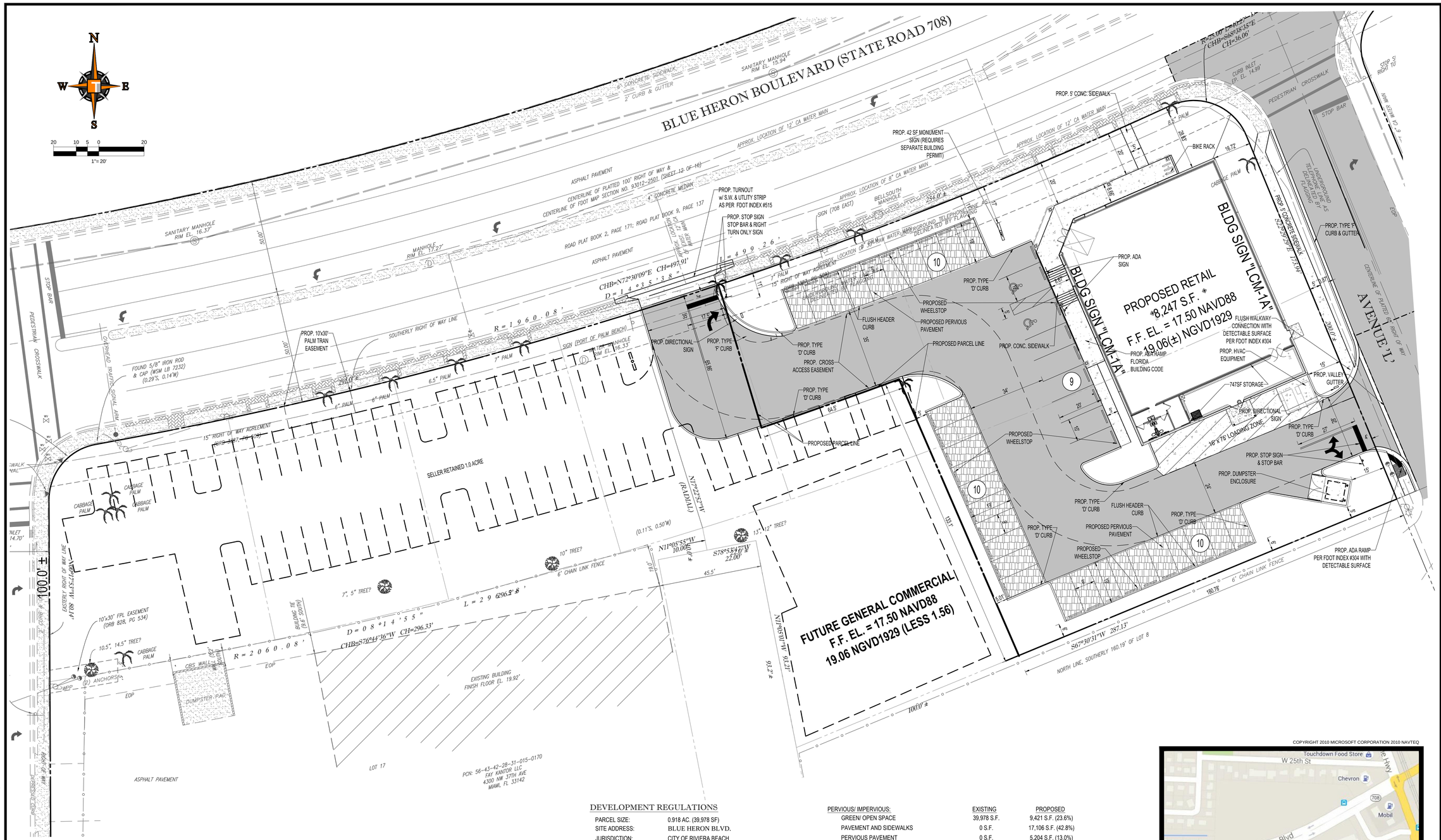

LEGAL DESCRIPTION:

LOTS 1 THROUGH 7, AND ALL OF LOT 8, LESS THE SOUTHERLY 160.19 FEET THEREOF, IN BLOCK 'O', OF REPLAT OF PLAT NO. 1, LEWIS TERMINALS, ACCORDING TO THE PLAT THEREOF, AS RECORDED IN PLAT BOOK 27, PAGE 39, OF THE PUBLIC RECORDS OF PALM BEACH COUNTY, FLORIDA.
BEING MORE PARTICULARLY DESCRIBED AS FOLLOWS:
BEGIN AT THE SOUTHWEST CORNER OF SAID LOT 1, BEING THE INTERSECTION OF THE EAST RIGHT OF WAY LINE OF AUSTRALIAN AVENUE AND THE SOUTH LINE OF SAID LOT 1; THENCE NORTH 00°17'53" WEST, ALONG SAID EAST RIGHT OF WAY LINE, A DISTANCE OF 80.11 FEET TO THE BEGINNING OF A CIRCULAR CURVE CONCAVE TO THE SOUTHEAST, HAVING A RADIUS OF 25.00 FEET, A CENTRAL ANGLE OF 80°05'51", A CHORD BEARING OF NORTH 39°45'02" EAST AND A CHORD DISTANCE OF 32.17 FEET; THENCE RUN NORTHEASTERLY ALONG THE ARC OF SAID CURVE, A DISTANCE OF 34.95 FEET TO A POINT OF REVERSE CURVATURE OF A CIRCULAR CURVE CONCAVE TO THE NORTHWEST, HAVING A RADIUS OF 1960.08 FEET, A CENTRAL ANGLE OF 14°35'38", A CHORD BEARING OF NORTH 72°30'09" EAST, AND A CHORD DISTANCE OF 497.91 FEET; THENCE RUN NORTHEASTERLY ALONG THE ARC OF SAID CURVE, A DISTANCE OF 499.26 FEET TO A POINT OF REVERSE CURVATURE OF A CIRCULAR CURVE CONCAVE TO THE SOUTHWEST, HAVING A RADIUS OF 25.00 FEET, A CENTRAL ANGLE OF 92°18'12", A CHORD BEARING OF SOUTH 68°38'35" EAST, AND A CHORD DISTANCE OF 36.06 FEET; THENCE RUN SOUTHEASTERLY ALONG THE ARC OF SAID CURVE, A DISTANCE OF 40.27 FEET TO A POINT OF TANGENCY ALONG THE WESTERLY RIGHT OF WAY LINE OF AVENUE 'L'; THENCE SOUTH 22°29'29" EAST, A DISTANCE OF 173.94 FEET TO A POINT ON THE NORTH LINE OF THE SOUTHERLY 160.19 FEET OF SAID LOT 8; THENCE SOUTH 67°30'31" WEST, ALONG SAID NORTH LINE, A DISTANCE OF 287.13 FEET TO A POINT ON THE EASTERLY LINE OF A 44 FOOT RAILROAD RIGHT OF WAY LINE; THENCE NORTH 11°05'01" WEST, ALONG SAID EAST LINE, A DISTANCE OF 93.21 FEET; THENCE SOUTH 78°53'47" WEST, A DISTANCE OF 22.00 FEET; THENCE NORTH 11°05'55" WEST, A DISTANCE OF 10.00 FEET TO A POINT ON THE SOUTH LINE OF SAID LOT 4, SAID POINT ALSO BEING ON AN ARC OF A CIRCULAR CURVE CONCAVE TO THE NORTHWEST TO WHICH A RADIAL LINE BEARS NORTH 17°22'52" WEST, HAVING A RADIUS OF 2060.08 FEET, A CENTRAL ANGLE OF 08°14'55" WEST, A CHORD BEARING OF SOUTH 76°44'36" WEST AND A CHORD DISTANCE OF 296.33 FEET; THENCE RUN SOUTHWESTERLY ALONG THE ARC OF SAID CURVE, A DISTANCE OF 296.58 FEET TO THE POINT OF BEGINNING.

HATCH LEGEND

PROPOSED ASPHALT PAVEMENT

SHARED EASEMENT ACCESS

PROPOSED CONCRETE

DEVELOPMENT REGULATIONS

PARCEL SIZE:	0.918 AC. (39,978 SF)
SITE ADDRESS:	BLUE HERON BLVD.
JURISDICTION:	CITY OF RIVIERA BEACH
ZONING DISTRICT:	CG - GENERAL COMMERCIAL DISTRICT
FUTURE LAND USE:	COMMERCIAL
FOLIO:	56-43-42-28-31-0150010
EXISTING USE:	VACANT
PROPOSED USE:	RETAIL

BUILDING SETBACKS:	REQUIRED	PROPOSED
MIN LOT AREA	10,000 S.F.	39,978 S.F.
MIN LOT WIDTH	100 FT	240 FT
MAXIMUM BUILDING HEIGHT	65 FT	TBD
FRONT SETBACK	20 FT	20 FT
SIDE STREET SETBACK	15 FT	15 FT
SIDE SETBACK	0 FT	N/A
REAR SETBACK	0 FT	5'

PERVIOUS/ IMPERVIOUS:	EXISTING	PROPOSED
GREEN/ OPEN SPACE	39,978 S.F.	9,421 S.F. (23.6%)
PAVEMENT AND SIDEWALKS	0 S.F.	17,106 S.F. (42.8%)
PERVIOUS PAVEMENT	0 S.F.	5,204 S.F. (13.0%)
BUILDING	0 S.F.	8,247 S.F. (20.6%)

	REQUIRED	PROPOSED
LANDSCAPE AREA (31-609)	20%	36.6%
PARKING LOT SETBACK FROM STREET	10 FEET	10 FEET
PARKING LOT SETBACK PROPERTY	5 FEET	5 FEET

PARKING REQUIRED:		
PARKING STALL DIMENSION	9' x 19'	10' x 20'
MIN. DRIVE AISLE WIDTH	24 FEET	24 FEET
PARKING STALLS		
RETAIL 7,493SF (1 : 200 RETAIL)	37	
STORAGE 754SF (1:1000 WAREHOUSE)	1	
PARKING PROVIDED	39	
LOADING SPACE	(1) 12' x 30'	(1) 16' x 60'

COPYRIGHT 2010 MICROSOFT CORPORATION 2010 NAVTEQ

LOCATION MAP

THOMAS ENGINEERING GROUP
CIVIL ENGINEERS · PROJECT MANAGERS · LAND PLANNING · LANDSCAPE ARCHITECTS
1000 CORPORATE DR. SUITE 250 FORT LAUDERDALE, FL 33334 P: 954-202-7000
4950 W. KENNEDY BLVD. SUITE 603 TAMPA, FL 33609 P: 813-379-4100
125 W INDIANTOWN RD. SUITE 206 JUPITER, FL 33458 P: 561-203-7503

THE INFORMATION, DESIGN, AND CONTENT OF THIS PLAN ARE PROPRIETARY AND SHALL NOT BE COPIED OR USED FOR ANY PURPOSE WITHOUT PRIOR WRITTEN AUTHORIZATION FROM THOMAS ENGINEERING GROUP, LLC. ONLY APPROVED, SIGNED AND SEALED PLANS SHALL BE UTILIZED FOR CONSTRUCTION PURPOSES. ©2016 THOMAS ENGINEERING GROUP, LLC.

REVISIONS:

REV:	DATE:	COMMENT:	BY:

811 KNOW WHAT'S BELOW ALWAYS CALL 811 BEFORE YOU DIG
It's fast. It's free. It's the law.
www.callsunshine.com

PROJECT No.:	FJ150025
DRAWN BY:	RFJ
CHECKED BY:	JMG
DATE:	04/19/16
CAD I.D.:	FJ150025-SITE PLAN

PROJECT:

AVENUE L RETAIL

FOR

EQUITAS

BLUE HERON BLVD. & AVENUE L
RIVIERA BEACH,
FLORIDA

THOMAS ENGINEERING GROUP
RADICE III
1000 CORPORATE DRIVE, SUITE 250
FORT LAUDERDALE, FL 33334
PH: (954) 202-7000
FX: (954) 202-7070
www.ThomasEngineeringGroup.com

JASON M. GUNTHER
PROFESSIONAL ENGINEER
December 28, 2016
FLORIDA LICENSE No. 58629
FLORIDA BUSINESS CERT. OF AUTH. No. 27528

SHEET TITLE:

SITE PLAN

SHEET NUMBER:

C-03

Printed on Wednesday, December 28, 2016, 8:49 AM by Jason Gunther
H:\PROJECTS\FJ150025-EQUITAS-AVENUE L\DWG\FJ150025-SITE PLAN.DWG

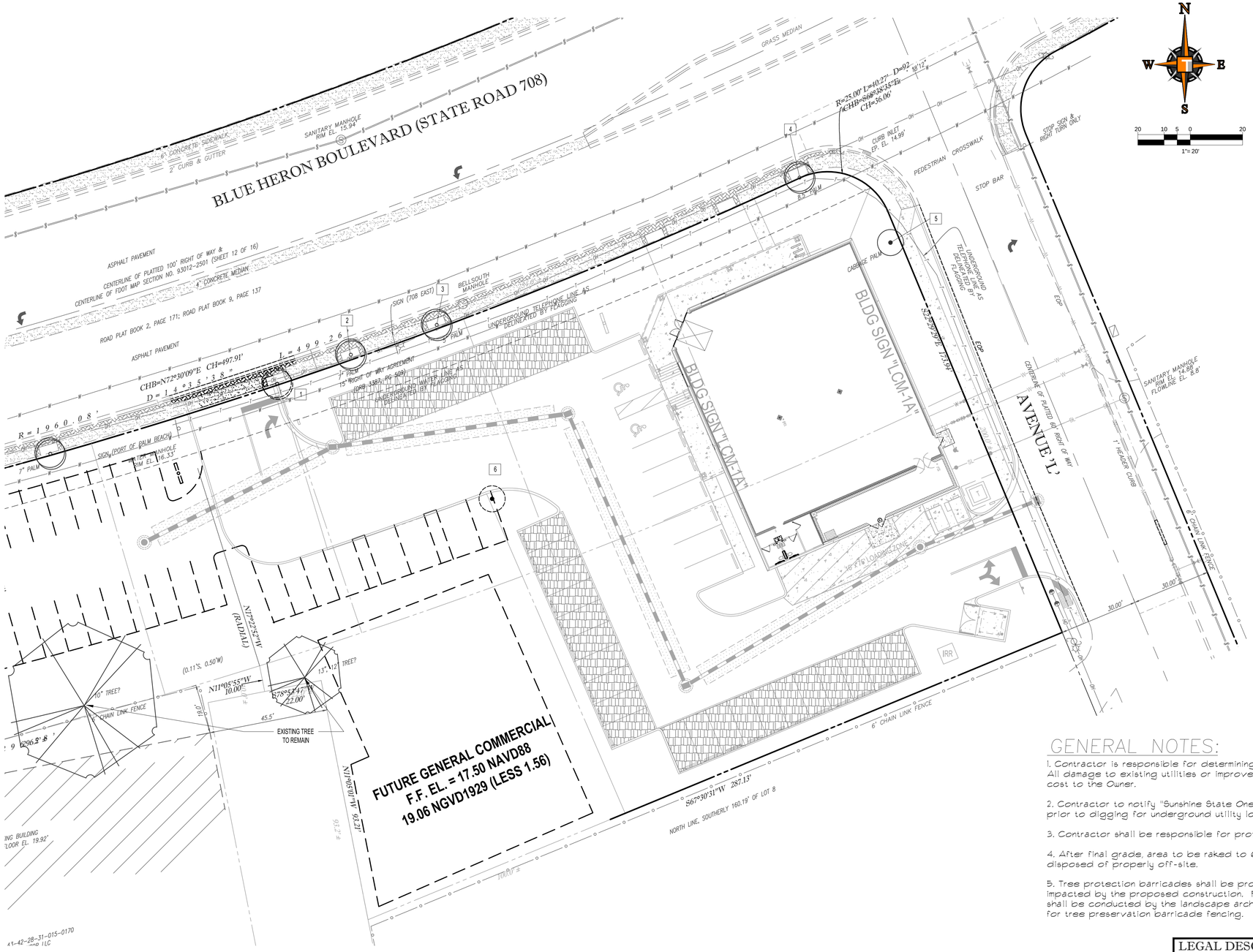

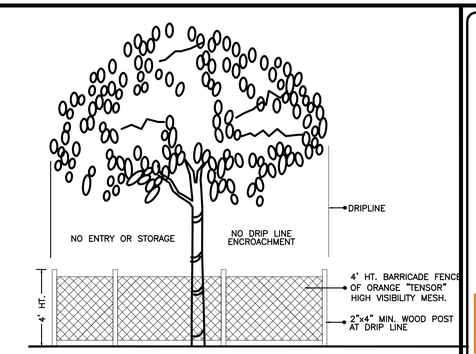

TREE PRESERVATION BARRICADE FENCING DETAIL

N.T.S.

ALL FINAL PLANS, SPECIFICATIONS, OR REPORTS PREPARED OR ISSUED BY THE REGISTERED LANDSCAPE ARCHITECT AND FILED FOR PUBLIC RECORD SHALL BE SIGNED BY THE REGISTERED LANDSCAPE ARCHITECT, DATED, AND STAMPED OR SEALED ELECTRONICALLY WITH HIS OR HER SEAL. THE SIGNATURE, DATE AND SEAL CONSTITUTE EVIDENCE OF THE AUTHENTICITY OF THAT TO WHICH THEY ARE AFFIXED

GENERAL NOTES:

1. Contractor is responsible for determining all utility locations and installing facilities so as to not conflict. All damage to existing utilities or improvements caused by Contractor shall be repaired at no additional cost to the Owner.

2. Contractor to notify "Sunshine State One Call of Florida, Inc." at 1-800-432-4770 Two Full Business Days prior to digging for underground utility locations.

3. Contractor shall be responsible for providing final grading of all associated planting areas.

4. After final grade, area to be raked to 6" depth and all rock and foreign inorganic materials removed and disposed of properly off-site.

5. Tree protection barricades shall be provided by Landscape Contractor around existing trees that may be impacted by the proposed construction. Prior to any construction a tree protection barricade inspection shall be conducted by the landscape architect, owner or governing municipality. Refer to landscape detail for tree preservation barricade fencing.

EXISTING TREE DISPOSITION CHART

FAMILY DOLLAR -RIVIERA BEACH, FL

TREE NO.	BOTANICAL NAME	COMMON NAME	HT (ft)	SPR (ft)	DIAMETER @ DBH	CANOPY s.f.	CONDITION	DISPOSITION	COMMENTS
1	Ptychoserma elegans	Solitaire Palm	12' gw	8	6"	50	Poor	remove	new driveway entrance
2	Ptychoserma elegans	Solitaire Palm	12' gw	8	7"	50	Poor	REMAIN	street tree
3	Ptychoserma elegans	Solitaire Palm	12' gw	8	5"	50	Poor	REMAIN	street tree
4	Ptychoserma elegans	Solitaire Palm	12' gw	8	8"	50	Poor	REMAIN	street tree
5	Sabal palmetto	Cabbage Palm	5'ct	10	12	79	Fair	REMAIN	
6	Sabal palmetto	Cabbage Palm	10'ct	10	14	79	Fair	remove	

LEGAL DESCRIPTION:

LOTS 1 THROUGH 7, AND ALL OF LOT 8, LESS THE SOUTHERLY 160.19 FEET THEREOF, IN BLOCK 'O', OF REPLAT OF PLAT NO. 1, LEWIS TERMINALS, ACCORDING TO THE PLAT THEREOF, AS RECORDED IN PLAT BOOK 27, PAGE 39, OF THE PUBLIC RECORDS OF PALM BEACH COUNTY, FLORIDA.
BEING MORE PARTICULARLY DESCRIBED AS FOLLOWS:
BEGIN AT THE SOUTHEWEST CORNER OF SAID LOT 1, BEING THE INTERSECTION OF THE EAST RIGHT OF WAY LINE OF AUSTRALIAN AVENUE AND THE SOUTH LINE OF SAID LOT 1; THENCE NORTH 00°17'53" WEST, ALONG SAID EAST RIGHT OF WAY LINE, A DISTANCE OF 80.19 FEET TO THE BEGINNING OF A CIRCULAR CURVE CONCAVE TO THE SOUTHEAST, HAVING A RADIUS OF 25.00 FEET, A CENTRAL ANGLE OF 80°05'51", A CHORD BEARING OF NORTH 39°45'02" EAST AND A CHORD DISTANCE OF 32.17 FEET; THENCE RUN NORTHEASTERLY ALONG THE ARC OF SAID CURVE, A DISTANCE OF 34.95 FEET TO A POINT OF REVERSE CURVATURE OF A CIRCULAR CURVE CONCAVE TO THE NORTHWEST, HAVING A RADIUS OF 1960.08 FEET, A CENTRAL ANGLE OF 14°35'38", A CHORD BEARING OF NORTH 72°30'09" EAST, AND A CHORD DISTANCE OF 497.91 FEET; THENCE RUN NORTHEASTERLY ALONG THE ARC OF SAID CURVE, A DISTANCE OF 499.26 FEET TO A POINT OF REVERSE CURVATURE OF A CIRCULAR CURVE CONCAVE TO THE SOUTHWEST, HAVING A RADIUS OF 25.00 FEET, A CENTRAL ANGLE OF 92°18'12", A CHORD BEARING OF SOUTH 68°38'35" EAST, AND A CHORD DISTANCE OF 36.06 FEET; THENCE RUN SOUTHEASTERLY ALONG THE ARC OF SAID CURVE, A DISTANCE OF 40.27 FEET TO A POINT OF TANGENCY ALONG THE WESTERLY RIGHT OF WAY LINE OF AVENUE 'L'; THENCE SOUTH 22°29'29" EAST, A DISTANCE OF 173.94 FEET TO A POINT ON THE NORTH LINE OF THE SOUTHERLY 160.19 FEET OF SAID LOT 8; THENCE SOUTH 67°30'31" WEST, ALONG SAID NORTH LINE, A DISTANCE OF 287.13 FEET TO A POINT ON THE EASTERLY LINE OF A 44 FOOT RAILROAD RIGHT OF WAY LINE; THENCE NORTH 11°05'01" WEST, ALONG SAID EAST LINE, A DISTANCE OF 93.21 FEET; THENCE SOUTH 78°53'47" WEST, A DISTANCE OF 22.00 FEET; THENCE NORTH 11°05'55" WEST, A DISTANCE OF 10.00 FEET TO A POINT ON THE SOUTH LINE OF SAID LOT 4, SAID POINT ALSO BEING ON AN ARC OF A CIRCULAR CURVE CONCAVE TO THE NORTHWEST TO WHICH A RADIAL LINE BEARS NORTH 17°22'52" WEST, HAVING A RADIUS OF 2060.08 FEET, A CENTRAL ANGLE OF 08°14'55" WEST, A CHORD BEARING OF SOUTH 76°44'38" WEST AND A CHORD DISTANCE OF 296.33 FEET; THENCE RUN SOUTHWESTERLY ALONG THE ARC OF SAID CURVE, A DISTANCE OF 296.58 FEET TO THE POINT OF BEGINNING.

THOMAS ENGINEERING GROUP
CIVIL ENGINEERS - PROJECT MANAGERS - LAND PLANNING - LANDSCAPE ARCHITECTS
1000 CORPORATE DR. SUITE 250 FORT LAUDERDALE, FL 33334 P: 954-202-7000
4950 W. KENNEDY BLVD. SUITE 600 TAMPA, FL 33609 P: 813-379-4100
125 W INDIANTOWN RD. SUITE 206 JUPITER, FL 33458 P: 561-203-7503

THE INFORMATION, DESIGN, AND CONTENT OF THIS PLAN, ARE PROPRIETARY, AND SHALL NOT BE COPIED OR USED FOR ANY PURPOSE WITHOUT PRIOR WRITTEN AUTHORIZATION FROM THOMAS ENGINEERING GROUP, LLC. ONLY APPROVED, DATED AND SEALED PLANS SHALL BE UTILIZED FOR CONSTRUCTION PURPOSES.

REVISIONS:

REV:	DATE:	COMMENT:	BY:
1	08-18-16	NEW SITE LAYOUT	JMG

811 KNOW WHAT'S BELOW ALWAYS CALL 811 BEFORE YOU DIG
It's fast. It's free. It's the law.
www.callsunshine.com

PROJECT No.: FJ150025
DRAWN BY: RFJ
CHECKED BY: JMG
DATE: 04/19/16
CAD I.D.: FJ150025-TREE DISPOSITION PLAN

PROJECT:

AVENUE L RETAIL

FOR

EQUITAS

BLUE HERON BLVD. & AVENUE L
RIVIERA BEACH,
FLORIDA

THOMAS ENGINEERING GROUP
RADICE III
1000 CORPORATE DRIVE, SUITE 250
FORT LAUDERDALE, FL 33334
PH: (954) 202-7000
FX: (954) 202-7070
www.ThomasEngineeringGroup.com

MICHAEL D. GROSSWIRTH
REGISTERED LANDSCAPE ARCHITECT
December 5, 2016
FLORIDA LICENSE No. 6666871
FLORIDA BUSINESS CERT. OF AUTH. No. 27528

SHEET TITLE:

TREE DISPOSITION PLAN

SHEET NUMBER:

L-1

Printed on: Monday, December 05, 2016, 3:39 PM by Michael Grosswirth

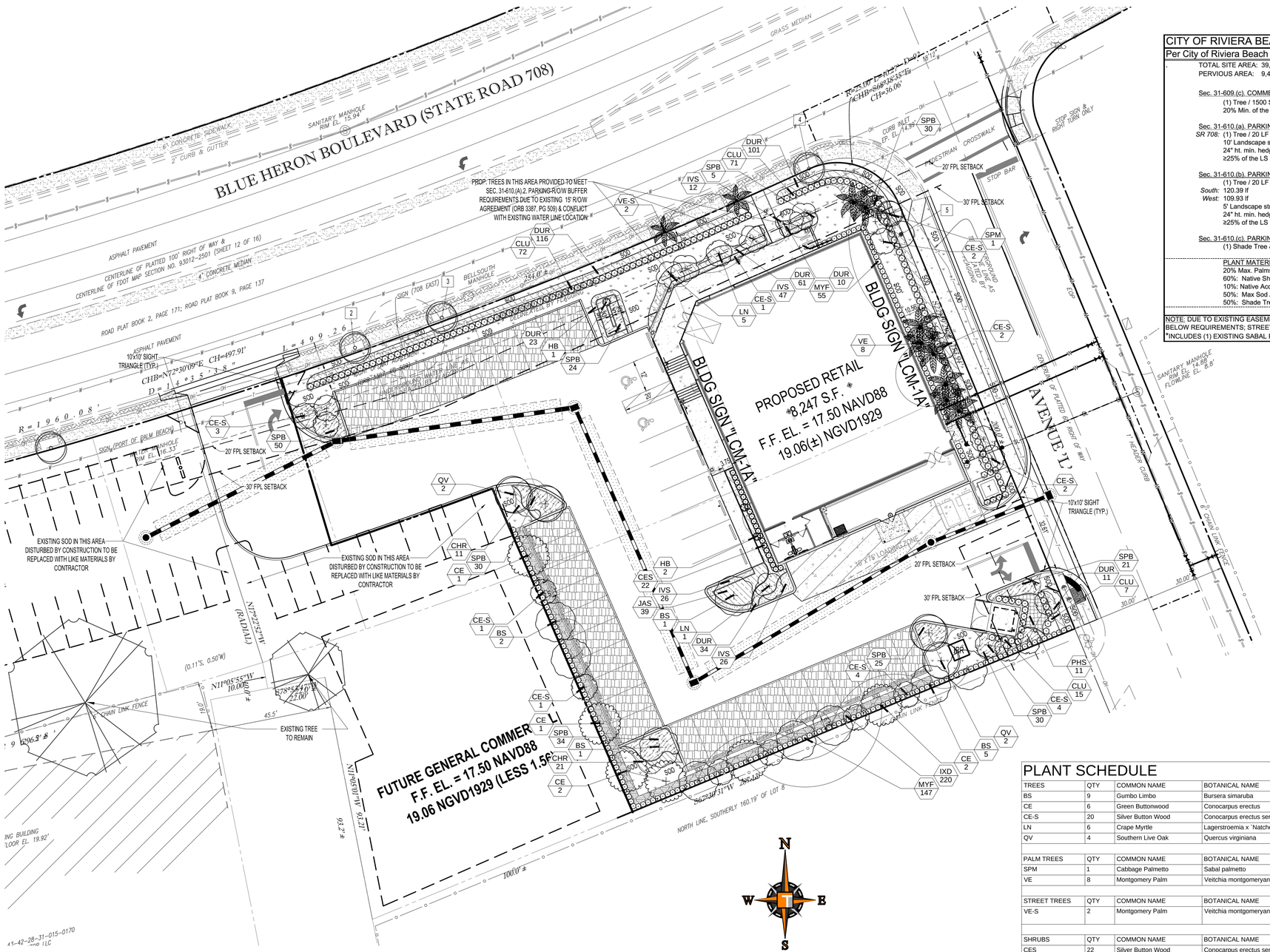

CITY OF RIVIERA BEACH, FLORIDA - LANDSCAPE CODE COMPLIANCE CHART

Per City of Riviera Beach Code of Ordinances, ARTICLE VIII

TOTAL SITE AREA: 39,978 sf (0.918 Acres)
PERVIOUS AREA: 9,421 sf (23.6%)

		REQUIRED	PROVIDED
Sec. 31-609.(c). COMMERCIAL DEVELOPMENT LANDSCAPING			
(1) Tree / 1500 SF of development site area	*(39,978 sf / 1500)*	27 Trees	**27 TREES**
20% Min. of the Gross Site Area to be devoted to Landscaping	*(39,978 * .20)*	7,995.6 sf	**9,421 SF**
Sec. 31-610.(a). PARKING AREA LANDSCAPING ADJACENT TO STREETS			
SR 708: (1) Tree / 20 LF of required Landscape Strip, 50 ft o.c. max.	*(119.56 lf / 20)*	6 Trees	**6 TREES**
10' Landscape strip b/w parking area & abutting street		10' LS Strip	**PROVIDED**
24" ht. min. hedge along the outside perimeter of the landscape strip, @ 24-30" o.c.		24" Hedge	**PROVIDED**
≥25% of the LS Strip to contain shrubs or groundcovers		2.5'	**PROVIDED**
Sec. 31-610.(b). PARKING AREA LANDSCAPING ABUTTING PRIVATE PROPERTY			
(1) Tree / 20 LF of required Landscape Strip, 50 ft o.c. max.			
South: 120.39 lf	*(120.39 lf / 20)*	7 Trees	**7 TREES**
West: 109.93 lf	*(109.93 lf / 20)*	6 Trees	**6 TREES**
5' Landscape strip b/w parking area & abutting private property		5' LS Strip	**PROVIDED**
24" ht. min. hedge along the outside perimeter of the landscape strip		24" Hedge	**PROVIDED**
≥25% of the LS Strip to contain shrubs or groundcovers		1'	**PROVIDED**
Sec. 31-610.(c). PARKING AREA INTERIOR LANDSCAPING			
(1) Shade Tree & shrubs/g.c./grass/mulch per Terminal Island	*(8 Term. Islands)*	8 Trees	**8 TREES**
PLANT MATERIALS:			
20% Max. Palms *(Counted 1:1)*		10 Palms	**9 PALMS***
60%: Native Shade Trees		33 Trees	**19 TREES (35.1%)**
10%: Native Accent Trees		6 Accents	**20 ACCENTS (37%)**
50%: Max Sod Area of total Landscape Area		4,710.5 Sf	**4,118 SF**
50%: Shade Trees in Interior Landscape Area		18/35 Trees	**8 TREES (22.8%)**
	TOTAL	54 TREES	**54 TREES***

NOTE: DUE TO EXISTING EASEMENTS, FPL OHW, UTILITIES, PROXIMITY TO BLDG, & LIMITED SPACE SHADE TREES PROVIDED FALL BELOW REQUIREMENTS; STREET TREES PROVIDED ARE NOT INCLUDED IN THE ABOVE CALCULATIONS FOR ONSITE REQUIREMENTS
*INCLUDES (1) EXISTING SABAL PALM & (8) PROPOSED PALMS COUNTED @ 1:1

PLANT SCHEDULE

TREES	QTY	COMMON NAME	BOTANICAL NAME	SPECIFICATIONS	CAL/DBH	HEIGHT	SPREAD	NATIVE	XERIC	REMARKS
BS	9	Gumbo Limbo	Bursera simaruba	B & B	2.5" DBH	12` Ht	5-6`	Yes	High	5` CT
CE	6	Green Buttonwood	Conocarpus erectus	B & B	2.5" DBH	12` Ht	6`	Yes	High	5` CT
CE-S	20	Silver Button Wood	Conocarpus erectus sericeus	B & B	1.5" DBH	10` Ht	4-5`	Yes	High	4` CT
LN	6	Crape Myrtle	Lagerstroemia x `Natchez`	B & B	1.5" DBH	10` Ht	5`	No	High	4` CT
QV	4	Southern Live Oak	Quercus virginiana	B & B	2.5" DBH	12` Ht	4`-5`	Yes	High	5` CT
PALM TREES	QTY	COMMON NAME	BOTANICAL NAME	SPECIFICATIONS	CAL/DBH	HEIGHT	SPREAD	NATIVE	XERIC	REMARKS
SPM	1	Cabbage Palmetto	Sabal palmetto	B & B		18-22` oa	10`	Yes	Medium	Mitigation Palm
VE	8	Montgomery Palm	Veitchia montgomeryana	NA	Varies	14`gw	7-8` spr,	No	Medium	
STREET TREES	QTY	COMMON NAME	BOTANICAL NAME	SPECIFICATIONS	CAL/DBH	HEIGHT	SPREAD	NATIVE	XERIC	REMARKS
VE-S	2	Montgomery Palm	Veitchia montgomeryana	NA	Varies	10` gw	6`	No	Medium	Not counted for On-Site requirements
SHRUBS	QTY	COMMON NAME	BOTANICAL NAME	SPECIFICATIONS	SPACING	HEIGHT	SPREAD	NATIVE	XERIC	REMARKS
CES	22	Silver Button Wood	Conocarpus erectus sericeus	NA	24"	24"	24"	Yes	High	full to base
CLU	165	Small-Leaf Clusia	Clusia guttifera	NA	30"	24"-30"	24-30"	Yes	High	Full to base
HB	3	Chinese Hibiscus	Hibiscus rosa-sinensis `Seminole`	NA	24"	36"	24"	No	Medium	
MYF	202	Compact Simpson`s Stopper	Myrcianthes fragrans `compacta`	NA	24"	24"	18"	Yes	High	full to base
SHRUB AREAS	QTY	COMMON NAME	BOTANICAL NAME	SPECIFICATIONS	SPACING	HEIGHT	SPREAD	NATIVE	XERIC	REMARKS
CHR	32	Red Tip Cocoplum	Chrysobalanus icaco `Red Tip`	n/a	24"	18"	18"	Yes	High	Full to base
DUR	356	Sky Flower	Duranta repens `Dwarf Golden`	n/a	18"	16-18"	16-18"	Yes	High	Full
JAS	39	Southern Wax Jasmine	Jasminum simplicifolium	n/a	24"	16"	18"	No	Medium	Full to base
PHS	11	Split Leaf Philodendron	Philodendron selloum	n/a	36"	24"	24"	No	Medium	Full to base
GROUND COVERS	QTY	COMMON NAME	BOTANICAL NAME	SPECIFICATIONS	SPACING	HEIGHT	SPREAD	NATIVE	XERIC	REMARKS
IVS	111	Dwarf Schillings Holly	Ilex vomitoria `Schillings Dwarf`	n/a	16"	14-16"	14-16"	Yes	High	
IXD	220	Dwarf Pink Ixora	Ixora x `Dwarf Pink`	n/a	20"	16-18"	16-18"	No	High	Full
SPB	249	Sand Cordgrass	Spartina bakeri	n/a	24"	14-16"	14-16"	Yes	High	
SOD/SEED	QTY	COMMON NAME	BOTANICAL NAME	SPECIFICATIONS	SPACING	HEIGHT	SPREAD	NATIVE	XERIC	REMARKS
SO2	648 sf	Floritam St. Augustine Sod	Stenotaphrum secundatum `Floritam`	sod				No	Medium	R/W sod
SOD	4,118 sf	Floritam St. Augustine Sod	Stenotaphrum secundatum `Floritam`	sod				No	Medium	

ALL LANDSCAPED AREAS TO BE FULLY COVERED BY AUTOMATIC IRRIGATION SYSTEM AS PER CITY CODES AND REQUIREMENTS. SEE IRRIGATION PLANS FOR FURTHER INFORMATION.

ALL INVASIVE & EXOTIC SPECIES TO BE REMOVED FROM SITE; REFER TO RIVIERA BEACH LDC ARTICLE VIII, APPENDIX A FOR LIST OF PROHIBITED VEGETATION

PER SECTION 31-605(B)(2), ALL TREE STAKES AND BRACES ARE REQUIRED TO REMAIN ONSITE AND ATTACHED FOR A MINIMUM OF 12 MONTHS

ALL FINAL PLANS, SPECIFICATIONS, OR REPORTS PREPARED OR ISSUED BY THE REGISTERED LANDSCAPE ARCHITECT AND FILED FOR PUBLIC RECORD SHALL BE SIGNED BY THE REGISTERED LANDSCAPE ARCHITECT, DATED, AND STAMPED OR SEALED ELECTRONICALLY WITH HIS OR HER SEAL. THE SIGNATURE, DATE AND SEAL CONSTITUTE EVIDENCE OF THE AUTHENTICITY OF THAT TO WHICH THEY ARE AFFIXED

THOMAS ENGINEERING GROUP
CIVIL ENGINEERS - PROJECT MANAGERS - LAND PLANNING - LANDSCAPE ARCHITECTS
1000 CORPORATE DR. SUITE 250 FORT LAUDERDALE, FL 33334 P: 954-202-7000
4950 W. KENNEDY BLVD. SUITE 600 TAMPA, FL 33609 P: 813-379-4100
125 W INDIANTOWN RD. SUITE 206 JUPITER, FL 33458 P: 561-203-7503

THE INFORMATION, DESIGN, AND CONTENT OF THIS DRAWING, INCLUDING BUT NOT LIMITED TO ALL RIGHTS OF REPRODUCTION AND PROPRIETARY RIGHTS, IS THE PROPERTY OF THOMAS ENGINEERING GROUP, LLC. ONLY APPROVED, SIGNED AND SEALED PLANS SHALL BE UTILIZED FOR CONSTRUCTION PURPOSES.

REVISIONS:

REV:	DATE:	COMMENT:	BY:
1	08-18-16	NEW SITE LAYOUT	JMG

KNOW WHAT'S BELOW ALWAYS CALL 811 BEFORE YOU DIG
It's fast. It's free. It's the law.
www.callsunshine.com

PROJECT No.: FJ150025
DRAWN BY: RFJ
CHECKED BY: JMG
DATE: 04/19/16
CAD I.D.: FJ150025-LANDSCAPE PLAN

PROJECT:

AVENUE L RETAIL

FOR

EQUITAS

BLUE HERON BLVD. & AVENUE L
RIVIERA BEACH,
FLORIDA

THOMAS ENGINEERING GROUP
RADICE III
1000 CORPORATE DRIVE, SUITE 250
FORT LAUDERDALE, FL 33334
PH: (954) 202-7000
FX: (954) 202-7070
www.ThomasEngineeringGroup.com

MICHAEL D. GROSSWIRTH
REGISTERED LANDSCAPE ARCHITECT
December 5, 2016
FLORIDA LICENSE No. 6666871
FLORIDA BUSINESS CERT. OF AUTH. No. 27528

SHEET TITLE:

LANDSCAPE PLAN

SHEET NUMBER:

L-2

Printed on Monday, December 05, 2016, 3:23 PM by Michael Grosswirth

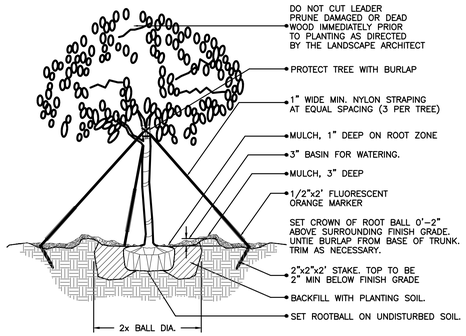

(2" cal. and over) LARGE TREE PLANTING DETAIL

N.T.S.

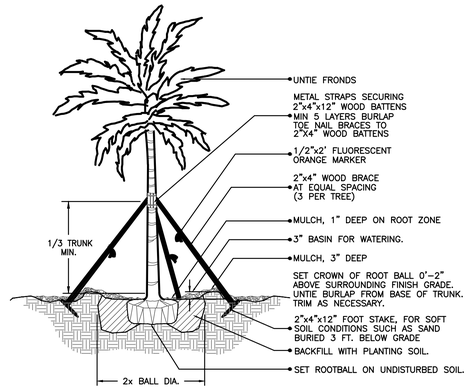

LARGE PALM PLANTING DETAIL

N.T.S.

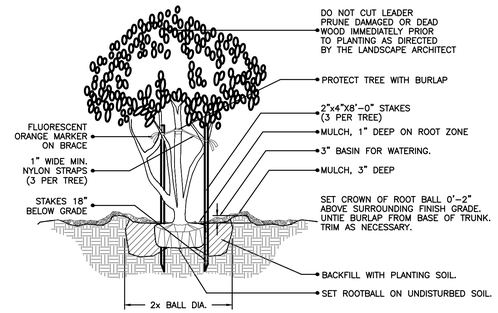

MULTI- TRUNK AND SMALL TREE (2" cal. and under) PLANTING DETAIL

N.T.S.

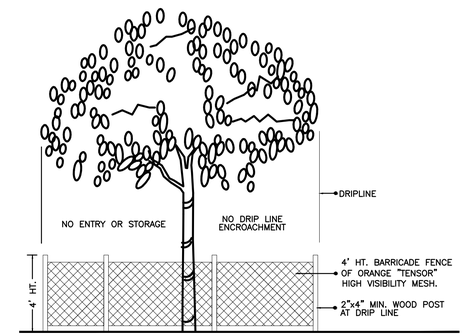

TREE PRESERVATION BARRICADE FENCING DETAIL

N.T.S.

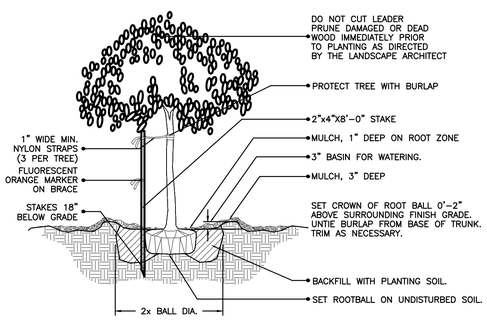

(2" cal. and under) SMALL TREE PLANTING DETAIL

N.T.S.

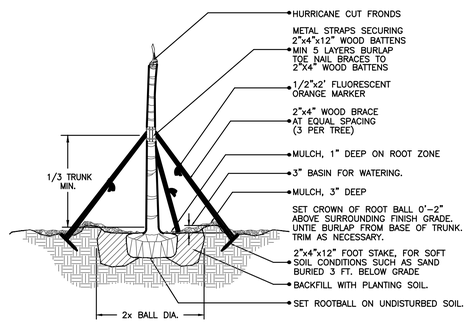

CIGARED SABAL PALM PLANTING DETAIL

N.T.S.

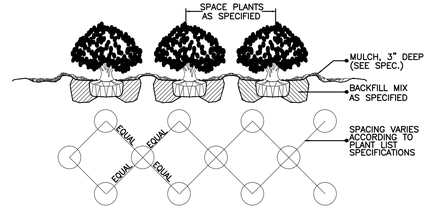

SHRUB / GROUNDCOVER SPACING / PLANTING DETAIL

N.T.S.

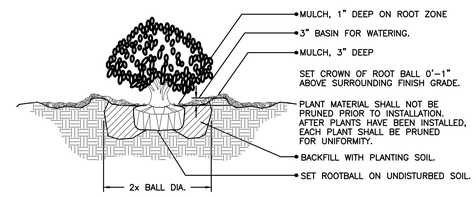

SHRUB PLANTING DETAIL

N.T.S.

THOMAS ENGINEERING GROUP
CIVIL ENGINEERS - PROJECT MANAGERS - LAND PLANNING - LANDSCAPE ARCHITECTS
1000 CORPORATE DR. SUITE 250 FT. LAUDERDALE, FL 33334 P: 954-202-7000
4950 W. KENNEDY BLVD. SUITE 600 TAMPA, FL 33609 P: 813-379-4100
125 W INDIANTOWN RD. SUITE 206 JUPITER, FL 33458 P: 561-203-7503

THE INFORMATION, DESIGN, AND CONTENT OF THIS PLAN, ARE PROPRIETARY AND SHALL NOT BE COPIED OR USED FOR ANY PURPOSE WITHOUT PRIOR WRITTEN AUTHORIZATION FROM THOMAS ENGINEERING GROUP, LLC. ONLY APPROVED, SIGNED AND SEALED PLANS SHALL BE UTILIZED FOR CONSTRUCTION PURPOSES. © THOMAS ENGINEERING GROUP, LLC.

REVISIONS:

REV:	DATE:	COMMENT:	BY:
1	08-18-16	NEW SITE LAYOUT	JMG

811 KNOW WHAT'S BELOW ALWAYS CALL 811 BEFORE YOU DIG
It's fast. It's free. It's the law.
www.callsunshine.com

PROJECT No.: FJ150025
DRAWN BY: RFJ
CHECKED BY: JMG
DATE: 04/19/16
CAD I.D.: FJ150025-LANDSCAPE PLAN

PROJECT:

AVENUE L RETAIL

FOR

EQUITAS

BLUE HERON BLVD. & AVENUE L
RIVIERA BEACH,
FLORIDA

THOMAS ENGINEERING GROUP
RADICE III
1000 CORPORATE DRIVE, SUITE 250
FORT LAUDERDALE, FL 33334
PH: (954) 202-7000
FX: (954) 202-7070
www.ThomasEngineeringGroup.com

MICHAEL D. GROSSWIRTH
REGISTERED LANDSCAPE ARCHITECT
December 5, 2016
FLORIDA LICENSE No. 6666871
FLORIDA BUSINESS CERT. OF AUTH. No. 27528

SHEET TITLE:

LANDSCAPE DETAILS

SHEET NUMBER:

L-3

Printed on Monday, December 05, 2016, 3:32 PM by Michael Grosswirth
S:\CIVIL\PROJ\LANDSCAPE\FJ150025-LANDSCAPE PLAN\------\LAYOUT: L-3 LANDSCAPE DETAILS

LANDSCAPE GENERAL NOTES

A. SCOPE OF WORK

1. THE WORK CONSISTS OF FURNISHING ALL LABOR, MATERIALS, EQUIPMENT, TOOLS, TRANSPORTATION, AND ANY OTHER APPURTENANCES NECESSARY FOR THE COMPLETION OF THIS PROJECT AS SHOWN ON THE DRAWINGS, AS INCLUDED IN THE PLANT LIST, AND AS HEREIN SPECIFIED.

2. WORK SHALL INCLUDE MAINTENANCE AND WATERING OF ALL PLANTING AREAS OF THIS CONTRACT UNTIL CERTIFICATION OF ACCEPTABILITY BY THE OWNER.

B. PROTECTION OF EXISTING STRUCTURES

1. ALL EXISTING BUILDINGS, WALKS, WALLS, PAVING, PIPING, AND OTHER ITEMS OF CONSTRUCTION AND PLANTING ALREADY COMPLETED OR ESTABLISHED SHALL BE PROTECTED FROM DAMAGE BY THIS CONTRACTOR UNLESS OTHERWISE SPECIFIED. ALL DAMAGE RESULTING FROM NEGLIGENCE SHALL BE REPAIRED OR REPLACED BY THE CONTRACTOR TO THE SATISFACTION OF THE OWNER.

C. PROTECTION OF EXISTING PLANT MATERIALS OUTSIDE LIMIT OF WORK

1. THE CONTRACTOR SHALL BE RESPONSIBLE FOR ALL UNAUTHORIZED CUTTING OR DAMAGE TO TREES AND SHRUBS, EXISTING OR OTHERWISE, CAUSED BY CARELESS OPERATION OF EQUIPMENT, STOCKPILING OF MATERIALS, ETC. THIS SHALL INCLUDE COMPACTION BY DRIVING OR PARKING INSIDE THE DRIP—LINE OR THE SPILLING OF OIL, GASOLINE, OR OTHER DELETERIOUS MATERIALS WITHIN THE DRIP—LINE.

2. NO MATERIALS SHALL BE BURNED WHERE THE HEAT WILL DAMAGE ANY PLANT. TREES KILLED OR DAMAGED SO THAT THEY ARE MISSHAPEN AND/OR UNSIGHTLY SHALL BE REPLACED AT THE COST TO THE CONTRACTOR OF ONE HUNDRED DOLLARS ($100) PER CALIPER INCH ON AN ESCALATING SCALE WHICH ADDS AN ADDITIONAL TWENTY PERCENT (20%) PER INCH OVER FOUR INCHES (4") CALIPER AS FIXED AND AGREED LIQUIDATED DAMAGES, OR AS MAY BE REQUIRED BY THE REGULATING GOVERNMENT AGENCY, WHICHEVER IS GREATER. CALIPER SHALL BE MEASURED AT BREAST HEIGHT OR FOUR FEET (4') ABOVE SURROUNDING GROUND.

D. MATERIALS

1. SUBMITTALS: GENERAL SAMPLES OF PLANTING MATERIALS AS LISTED BELOW SHALL BE SUBMITTED FOR APPROVAL, ON THE SITE OR AS OTHERWISE DETERMINED BY THE OWNER. UPON APPROVAL OF SAMPLES, DELIVERY OF MATERIALS MAY BEGIN.
MATERIALS SAMPLE SUBMITTALS
MULCH ONE (1) CUBIC FOOT
TOPSOIL ONE (1) CUBIC FOOT
PLANTS ONE (1) REPRESENTATIVE SAMPLE OF EACH VARIETY

2. PLANT MATERIALS
a) GENERAL: PLANT SPECIES AND SIZE SHALL CONFORM TO THOSE INDICATED ON THE DRAWINGS. NOMENCLATURE SHALL CONFORM TO STANDARDIZED PLANT NAMES, 1942 EDITION. ALL NURSERY STOCK SHALL BE IN ACCORDANCE WITH "GRADES AND STANDARDS FOR NURSERY PLANTS" PARTS I AND II, LATEST EDITION PUBLISHED BY THE FLORIDA DEPARTMENT OF AGRICULTURE AND CONSUMER SERVICES. ALL PLANTS SHALL BE FLORIDA NO. 1 AS AN ABSOLUTE MINIMUM UNLESS OTHERWISE SUPERCEDED BY A FLORIDA FANCY DESIGNATION, AS DETERMINED BY THE FLORIDA DIVISION OF PLANT INDUSTRY. ALL PLANTS SHALL BE FRESHLY DUG, SOUND. HEALTHY, VIGOROUS, WELL—BRANCHED AND FREE OF DISEASE AND INSECTS, INSECT EGGS AND LARVAE, AND SHALL HAVE ADEQUATE ROOT SYSTEMS. TREES FOR PLANTING IN ROWS SHALL BE UNIFORM IN SIZE AND SHAPE. ALL MATERIALS SHALL BE SUBJECT TO APPROVAL BY THE OWNER. WHERE ANY REQUIREMENTS ARE OMITTED FROM THE PLANT LIST, THE PLANTS FURNISHED SHALL BE NORMAL FOR THE VARIETY. PLANTS SHALL BE PRUNED PRIOR TO DELIVERY ONLY UPON THE APPROVAL OF THE OWNER.

b) MEASUREMENTS: THE HEIGHT AND/OR WIDTH OF TREES SHALL BE MEASURED FROM THE TOP OF ROOTBALL (TRUNK FLARE) AND/OR ACROSS THE AVERAGE SPREAD OF BRANCHES WITH THE PLANTS IN THEIR NORMAL POSITION. THIS MEASUREMENT SHALL NOT INCLUDE THE IMMEDIATE TERMINAL GROWTH. PLANTS LARGER IN SIZE THAN THOSE SPECIFIED IN THE PLANT LIST MAY BE USED IF APPROVED BY THE OWNER. IF THE USE OF LARGER PLANTS IS APPROVED, THE BALL OF EARTH OR SPREAD OF ROOTS SHALL BE INCREASED IN PROPORTION TO THE SIZE OF THE PLANT.

c) INSPECTION: PLANTS SHALL BE SUBJECT TO INSPECTION AND APPROVAL AT THE PLACE OF GROWTH, OR UPON DELIVERY TO THE SITE, AS DETERMINED BY THE OWNER, FOR QUALITY, SIZE, AND VARIETY; SUCH PRELIMINARY APPROVAL SHALL NOT SUPERCEDE THE RIGHT OF INSPECTION AND REJECTION AT THE SITE DURING PROGRESS OF THE WORK OR AFTER COMPLETION FOR SIZE AND CONDITION OF BALLS OR ROOTS, LATENT DEFECTS OR INJURIES, PRESENCE OF INSECTS, AND OTHER CONDITIONS THAT MAY HAVE OCCURRED SINCE THE NURSERY INSPECTION. REJECTED PLANTS SHALL BE REMOVED IMMEDIATELY FROM THE SITE. NOTICE REQUESTING INSPECTION SHALL BE SUBMITTED IN WRITING BY THE CONTRACTOR AT LEAST ONE (1) WEEK PRIOR TO ANTICIPATED DATE.

d) AMENDED PLANTING SOIL: PLANTING SOIL FOR USE IN BACK FILLING PLANTING HOLES SHALL BE FORTY PERCENT (40%) TOPSOIL AND SIXTY PERCENT (60%) SAND AND BE FERTILE, FRIABLE, AND OF A LOAMY CHARACTER, WITHOUT MIXTURE OF SUBSOIL MATERIALS, AND OBTAINED FROM A WELL—DRAINED, ARABLE SITE. IT SHALL CONTAIN THREE (3) TO FIVE (5) PERCENT DECOMPOSED ORGANIC MATTER AND SHALL BE FREE FROM HEAVY CLAY, COARSE SAND, STONES, LIME, LUMPS, PLANTS, ROOTS OR OTHER FOREIGN MATERIALS, OR NOXIOUS WEEDS. IT SHALL NOT CONTAIN TOXIC SUBSTANCES WHICH MAY BE HARMFUL TO PLANT GROWTH. PH RANGE SHALL BE 5.0 TO 7.0 INCLUSIVE.

e) SAND SHALL BE CLEAN, WELL DRAINING NATIVE SAND. IF REQUESTED, CONTRACTOR SHALL AT ANY TIME AND AT NO COST TO OWNER SUBMIT RESULTS OF SOIL TESTS FOR TOPSOIL AND SAND PROPOSED FOR USE UNDER THIS CONTRACT FOR APPROVAL BY OWNER.

E. WATER

1. WATER NECESSARY FOR PLANTING AND MAINTENANCE SHALL BE OF SATISFACTORY QUALITY TO SUSTAIN AN ADEQUATE GROWTH OF PLANTS AND SHALL NOT CONTAIN HARMFUL NATURAL OR MAN—MADE ELEMENTS DETRIMENTAL TO PLANTS. WATER MEETING THE ABOVE STANDARD SHALL BE OBTAINED ON THE SITE FROM THE OWNER, IF AVAILABLE, AND THE CONTRACTOR SHALL BE RESPONSIBLE TO MAKE ARRANGEMENTS FOR ITS USE BY HIS TANKS, HOSES, SPRINKLERS, ETC. IF SUCH WATER IS NOT AVAILABLE AT THE SITE, THE CONTRACTOR SHALL PROVIDE SUCH SATISFACTORY WATER FROM SOURCES OFF THE SITE AT NO ADDITIONAL COST TO THE OWNER.

F. COMMERCIAL FERTILIZER

1. COMMERCIAL FERTILIZER SHALL BE A COMPLETE FORMULA; IT SHALL BE UNIFORM IN COMPOSITION, DRY AND FREE FLOWING. THIS FERTILIZER SHALL BE DELIVERED TO THE SITE IN THE ORIGINAL UNOPENED CONTAINERS, EACH BEARING THE MANUFACTURER'S GUARANTEED STATEMENT OF ANALYSIS.

FIFTY PERCENT (50%) OF THE NITROGEN SHALL BE DELIVERED FROM NATURAL ORGANIC SOURCES. THE FOLLOWING FERTILIZERS SHALL BE USED AND APPLIED AT RATES AS SUGGESTED BY MANUFACTURER'S SPECIFICATIONS:

1. SHRUBS AND TREES — MILORGANITE, OR APPROVED EQUAL
2. ANNUALS AND GROUNDCOVERS — OSMOCOTE/SIERRA BLEND 14—14—14
3. SOD — 8—8—8

IN ADDITION TO SURFACE APPLIED FERTILIZERS, ALL CONTAINER GROWN AND FIELD GROWN PLANT MATERIAL SHALL RECEIVE "AGRIFORM" PLANTING TABLETS 24—10—5 FORMULA, 21 GRAM OR EQUAL. THESE TABLETS SHALL BE PLACED AT THE RATE AND DEPTH SPECIFIED BY MANUFACTURER.

G. MULCH

1. MULCH SHALL BE FROM SHREDDED WOOD DERIVED FROM MELALEUCA OR OTHER INVASIVE TREE SPECIES AND SHALL BE STERILIZED TO EFFECTIVELY ELIMINATE ALL SEEDS, SPORES, ETC. AND RENDER THEM BARREN.

2. MULCH MATERIAL SHALL BE MOISTENED AT THE TIME OF APPLICATION TO PREVENT WIND DISPLACEMENT, AND APPLIED AT A DEPTH OF THREE INCHES (3").

3. MULCH SHALL BE GRADE 'B' SHREDDED, AND SHALL BE APPLIED EVENLY AND SMOOTH TO PLANTED AREAS.

4. NO RED OR COLORED MULCH SHALL BE ACCEPTED UNLESS SPECIFIED ACCORDINGLY. NO CYPRESS MULCH SHALL BE USED.

H. DIGGING AND HANDLING

1. PROTECT ROOT SYSTEMS OR ROOTBALLS OF PLANTS AT ALL TIMES FROM SUN AND DRYING WINDS, WATER EROSION, AND OTHER HARMFUL CRITERIA AS NECESSARY UNTIL PLANTING. PLANT MATERIALS SHALL BE ADEQUATELY PACKED TO PREVENT BREAKING AND DRYING OUT DURING LOADING, TRANSIT, AND UNLOADING/PLANTING. TREES TRANSPORTED MORE THAN TEN (10) MILES OR WHICH ARE NOT PLANTED WITHIN THREE (3) DAYS OF DELIVERY TO SITE SHALL BE SPRAYED WITH AN ANTITRANSPIRANT PRODUCT ("WILTPRUF" OR EQUAL) TO MINIMIZE TRANSPIRATIONAL WATER LOSS.

2, BALLED AND BURLAPPED PLANTS (B&B) SHALL BE DUG WITH FIRM, NATURAL BALLS OF SOIL OF SUFFICIENT SIZE TO ENCOMPASS THE FIBROUS AND FEEDING ROOTS OF THE PLANTS, AND IN ACCORDANCE WITH "GRADES AND STANDARDS FOR NURSERY PLANTS" FLORIDA PUBLICATION. NO PLANT WITH A ROOTBALL SHALL BE PLANTED IF THE BALL IS CRACKED OR BROKEN. PLANTS BALLED AND BURLAPPED OR CONTAINER GROWN SHALL NOT BE HANDLED BY STEMS.

3. PLANTS MARKED "BR" IN THE PLANT LIST SHALL BE DUG WITH BARE ROOTS. THE ROOTS SHALL NOT BE CUT WITHIN THE MINIMUM SPREAD SPECIFIED IN THE PLANT LIST. CARE SHALL BE EXERCISED THAT THE ROOTS DO NOT DRY OUT IN MOVING AND PRIOR TO PLANTING.

4. PROTECTION OF PALMS (IF APPLICABLE): ONLY A MINIMUM OF FRONDS SHALL BE REMOVED FROM THE CROWN OF THE PALM TREES TO FACILITATE MOVING AND HANDLING. CLEAR TRUNK (CT) SHALL BE AS BY "GRADES AND STANDARDS FOR NURSERY PLANTS" FLORIDA PUBLICATION. PRUNING PRACTICED OTHER THAN MINIMAL PRUNING OF FRONDS, PRIMARILY TO REACH A "CLEAR TRUNK" SPECIFICATION, MAY CONSTITUTE REJECTION, OR ALL PALMS SUBJECTED TO SUCH PRACTICE. LIKEWISE EXCESSIVE PRUNING OR "SHAVING" OF ROOTBALLS TO MEET "CLEAR TRUNK" CRITERIA MAY CONSTITUTE REJECTION ONSITE. ALL PALMS SHALL BE BRACED PER PALM PLANTING DETAIL ON THE PLANTING DETAILS SHEET.

5. EXCAVATION OF PLANTING HOLES SHALL BE DONE USING EXTREME CARE TO AVOID DAMAGE TO SURFACE AND SUBSURFACE ELEMENTS SUCH AS UTILITIES OR HARDSCAPE ELEMENTS, FOOTERS, AND PREPARED SUB—BASES.

I. CONTAINER GROWN STOCK

1. ALL CONTAINER GROWN MATERIAL SHALL BE HEALTHY, VIGOROUS, WELL—ROOTED PLANTS AND ESTABLISHED IN THE CONTAINER IN WHICH THEY ARE SOLD. THE PLANTS SHALL HAVE TOPS WHICH ARE OF GOOD QUALITY AND ARE IN A HEALTHY GROWING CONDITION, AND SHALL MEET MINIMUM SPECIFICATIONS IN THE PLANT LIST.

2. AN ESTABLISHED CONTAINER GROWN PLANT SHALL BE TRANSPLANTED INTO A CONTAINER AND GROWN IN THAT CONTAINER SUFFICIENTLY LONG FOR THE NEW FIBROUS ROOTS TO HAVE DEVELOPED SO THAT THE ROOT MASS WILL RETAIN ITS SHAPE AND HOLD TOGETHER WHEN REMOVED FROM THE CONTAINER. CONTAINER GROWN STOCK SHALL NOT BE HANDLED BY THEIR STEMS.

3, PLANT ROOTS BOUND IN CONTAINERS SHALL NOT BE ACCEPTABLE.

4. SUBSTITUTION OF NON—CONTAINER GROWN MATERIAL FOR MATERIAL EXPLICITLY SPECIFIED TO BE CONTAINER GROWN WILL NEED AUTHORIZATION FROM THE OWNER.

J. COLLECTED STOCK

1. WHEN THE USE OF COLLECTED STOCK IS PERMITTED AS INDICATED ON THE PLANT LIST SCHEDULE, THE MINIMUM SIZES OF ROOT BALLS SHALL BE EQUAL TO THAT SPECIFIED FOR THE NEXT LARGER SIZE OF NURSERY GROWN STOCK OF THE SAME VARIETY.

K. NATIVE STOCK

1. PLANTS COLLECTED FROM WILD OR NATIVE STANDS SHALL BE CONSIDERED GROWN WHEN THEY HAVE BEEN SUCCESSFULLY REESTABLISHED IN A NURSERY ROW AND GROWN UNDER REGULAR NURSERY CULTURAL PRACTICES FOR A MINIMUM OF TWO (2) GROWING SEASONS AND HAVE ATTAINED ADEQUATE ROOT AND TOP GROWTH TO INDICATE FULL RECOVERY FROM TRANSPLANTING INTO THE NURSERY ROW.

L. MATERIALS LIST

1. QUANTITIES NECESSARY TO COMPLETE THE WORK ON THE DRAWINGS SHALL BE FURNISHED. QUANTITY ESTIMATES HAVE BEEN MADE CAREFULLY, BUT THE LANDSCAPE ARCHITECT OR OWNER ASSUMES NO LIABILITY FOR OMISSIONS OR ERRORS. SHOULD A DISCREPANCY OCCUR BETWEEN A BIDDER'S TAKE OFF AND THE PLANT LIST QUANTITY, THE LANDSCAPE ARCHITECT SHALL BE NOTIFIED FOR CLARIFICATION PRIOR TO THE SUBMISSION OF BIDS. DRAWING SHALL TAKE PRECEDENCE. ALL DIMENSIONS AND/OR SIZES SPECIFIED SHALL BE THE MINIMUM ACCEPTABLE SIZE.

M. FINE GRADING

1. FINE GRADING UNDER THIS CONTRACT SHALL CONSIST OF FINAL FINISHED GRADING OF LAWN AND PLANTING AREAS THAT HAVE BEEN ROUGH GRADED BY OTHERS. BERMING AS SHOWN ON THE DRAWINGS SHALL BE THE RESPONSIBILITY OF THE LANDSCAPE CONTRACTOR, UNLESS OTHERWISE NOTED.

2. THE CONTRACTOR SHALL FINE GRADE THE LAWN AND PLANTING AREAS TO BRING THE ROUGH GRADE UP TO FINAL FINISHED GRADE ALLOWING FOR THICKNESS OF SOD AND/OR MULCH DEPTH. THIS CONTRACTOR SHALL FINE GRADE BY HAND AND/OR WITH ALL EQUIPMENT NECESSARY INCLUDING A GRADING TRACTOR WITH FRONT—END LOADER FOR TRANSPORTING SOIL WITHIN THE SITE.

3. ALL PLANTING AREAS SHALL BE GRADED AND MAINTAINED TO ALLOW FREE FLOW OF SURFACE WATER. AREAS ADJACENT TO BUILDINGS SHALL SLOPE AWAY FROM THE BUILDINGS.

N. PLANTING PROCEDURES

1. CLEANING UP BEFORE COMMENCING WORK: THE CONTRACTOR SHALL CLEAN UP WORK AND SURROUNDING AREAS OF ALL RUBBISH OR OBJECTIONABLE MATTER. ALL MORTAR, CEMENT, AND TOXIC MATERIAL SHALL BE COMPLETELY REMOVED FROM THE SITE. THESE MATERIALS SHALL NOT BE MIXED WITH THE SOIL. SHOULD THE CONTRACTOR FIND SUCH SOIL CONDITIONS BENEATH THE SOIL WHICH WILL IN ANY WAY AFFECT THAT VIABILITY OF THE PLANTS TO BE INSTALLED, HE/SHE SHALL IMMEDIAT CALL IT TO THE ATTENTION OF THE OWNER'S CONSTRUCTION MANAGER OR DESIGNEE.

2. VERIFY LOCATIONS OF ALL UTILITIES, CONDUITS, SUPPLY LINES AND CABLES. INCLUDING BUT NOT LIMITED TO: ELECTRIC, GAS (LINES AND TANKS), WATER, SANITARY SEWER, STORM WATER LINES, CABLE AND TELEPHONE. PROPERLY MAINTAIN AND PROTECT EXISTING UTILITIES.

3. SUBGRADE EXCAVATION: CONTRACTOR IS RESPONSIBLE TO REMOVE ALL EXISTING AND IMPORTED LIMEROCK AND LIMEROCK SUB—BASE FROM ALL LANDSCAPE PLANTING AREAS TO MINIMUM DEPTH OF APPROXIMATELY 20% GREATER THAN RECOMMENDED PLANTING SOIL DEPTH. CONTRACTOR IS RESPONSIBLE TO BACKFILL THESE PLANTING AREAS TO ROUGH FINISHED GRADE WITH CLEAN TOPSOIL FROM AN ONSITE SOURCE OR AN IMPORTED SOURCE. IF LIMEROCK CONDITIONS OCCUR IN PLANTED AREAS AFTER 36" DEEP EXCAVATION BY CONTRACTOR, AND POSITIVE DRAINAGE CAN NOT BE ACHIEVED, CONTRACTOR SHALL UTILIZE PLANTING DETAIL THAT ADDRESSES POOR DRAINAGE OR CONTACT OWNER'S CONSTRUCTION MANAGER OR DESIGNEE FOR RESOLUTION.

4. FURNISH NURSERY'S CERTIFICATE OF COMPLIANCE WITH ALL REQUIREMENTS AS HEREIN SPECIFIED AND REQUIRED. INSPECT AND SELECT PLANT MATERIALS BEFORE PLANTS ARE DUG AT NURSERY OR GROWING SITE.

5. GENERAL: COMPLY WITH FEDERAL, STATE, COUNTY, AND LOCAL REGULATIONS GOVERNING LANDSCAPE MATERIALS AND WORK. CONFORM TO ACCEPTED HORTICULTURAL PRACTICES AS USED IN THE TRADE. PLANTS SHALL BE PROTECTED UPON ARRIVAL AT THE SITE BY BEING THOROUGHLY WATERED AND PROPERLY MAINTAINED UNTIL PLANTED. PLANTS SHALL NOT REMAIN UNPROTECTED FOR A PERIOD EXCEEDING TWENTY—FOUR (24) HOURS. AT ALL TIMES WORKMANLIKE METHODS CUSTOMARY IN GOOD HORTICULTURAL PRACTICES SHALL BE EXERCISED.

6. THE WORK SHALL BE COORDINATED WITH OTHER TRADES TO PREVENT CONFLICTS. COORDINATE THE PLANTING WITH THE IRRIGATION WORK TO ASSURE AVAILABILITY OF WATER AND PROPER LOCATION OF IRRIGATION ITEMS AND PLANTS.

7. ALL PLANTING HOLES SHALL BE EXCAVATED TO SIZE AND DEPTH IN ACCORDANCE WITH THE USA STANDARD TO NURSERY STOCK 280.1, UNLESS SHOWN OTHERWISE ON THE DRAWINGS, AND BACKFILLED WITH THE PREPARED PLANTING SOIL AS SPECIFIED HEREIN BEFORE (SEE MATERIALS, SECTION D). TEST ALL TREE PITS WITH WATER BEFORE PLANTING TO ASSURE PROPER DRAINAGE PERCOLATION IS AVAILABLE. NO ALLOWANCE WILL BE MADE FOR LOST PLANTS DUE TO IMPROPER DRAINAGE. IF POOR DRAINAGE EXISTS, UTILIZE PLANTING DETAIL THAT ADDRESSES THIS CONDITION. TREES SHALL BE SET PLUMB AND HELD IN POSITION UNTIL THE PLANTING MIXTURE HAS BEEN FLUSHED INTO PLACE WITH A SLOW, FULL HOSE STREAM. ALL PLANTING SHALL BE PERFORMED BY PERSONNEL FAMILIAR WITH PLANTING PROCEDURE AND UNDER THE SUPERVISION OF A QUALIFIED PLANTING FOREMAN. PROPER "JETTING IN" SHALL BE ASSURED TO ELIMINATE AIR POCKETS AROUND THE ROOTS. "JET STICK" OR EQUAL IS RECOMMENDED.

8. TAKE ALL NECESSARY PRECAUTIONS TO AVOID DAMAGE TO BUILDINGS, CURBS, PAVING, AND OTHER HARDSCAPE MATERIALS WHILE INSTALLING TREES.

9. SOIL MIXTURE SHALL BE AS SPECIFIED IN SECTION D (MATERIALS) OF THESE SPECIFICATIONS. IN ADDITION, EACH PLANTING HOLE SHALL RECEIVE 21—GRAM "AGRIFORM" PLANTING TABLETS PER MANUFACTURER'S SPECIFICATIONS OR AS FOLLOWS:
— TWO (2) TABLETS PER 1 GAL. PLANT
— THREE (3) TABLETS PER 3 GAL. PLANT
— FOUR (4) TABLETS PER 10 GAL. PLANT
LARGER MATERIAL
— TWO (2) TABLETS PER HALF INCH (1/2") OF TRUNK CALIPER

10. TREES AND SHRUBS SHALL BE SET STRAIGHT AND AT SUCH A LEVEL THAT AFTER SETTLEMENT, THE TOP OF THE ROOT SYSTEM (FOR SHRUBS AND GROUNDCOVER) OR TRUNK FLARE (TREES AND PALMS) WILL STAND ONE (1) TO TWO (2) INCHES ABOVE FINAL GRADE. EACH PLANT SHALL BE SET IN THE CENTER OF THE PLANTING HOLE. PLANTING SOIL MIXTURE SHALL BE BACKFILLED AND THOROUGHLY TAMPED AROUND THE BALL AND SHALL BE SETTLED BY WATER AFTER TAMPING.

11. FILL HOLE WITH SOIL MIXTURE, MAKING CERTAIN ALL SOIL IS SATURATED. TO DO THIS, FILL HOLE WITH WATER AND ALLOW TO SOAK MINIMUM TWENTY (20) MINUTES, TURNING SOIL IF NECESSARY TO GET SOIL THOROUGHLY WET. PACK LIGHTLY WITH FEET OR OTHER TAMPING DEVICE. ADD MORE WET SOIL MIXTURE. DO NOT COVER TOP OF BALL WITH SOIL MIXTURE, ONLY WITH MULCH. ALL BURLAP, ROPE, WIRES, ETC., SHALL BE PULLED FROM UNDERNEATH.

12. PRUNING: FOR DAMAGED OR BROKEN LIMBS, EACH TREE SHALL BE PRUNED TO PRESERVE THE NATURAL CHARACTER OF THE SPECIES. ALL SUCKER GROWTH SHALL BE COMPLETELY REMOVED PRIOR TO DIGGING.

13. SHRUBS AND GROUNDCOVER PLANTS SHALL BE EVENLY SPACED IN ACCORDANCE WITH THE DRAWINGS AND AS INDICATED IN THE PLANT LIST. CULTIVATE ALL MASS PLANTING AREAS TO A MINIMUM DEPTH OF 6", REMOVE AND DISPOSED ALL DEBRIS, TILL 4" OF PLANTING SOIL MIX INTO THE NEWLY TILLED PLANTING BED FOR GENERAL NUTRIENT DISBURSEMENT. MASS PLANTING BED IS NOW READY TO RECEIVE HOLES FOR NEW PLANTS. THOROUGHLY WATER ALL PLANTS AFTER INSTALLATION.

14. TREE GUYING AND BRACING SHALL BE INSTALLED BY THE LANDSCAPE CONTRACTOR IN ACCORDANCE WITH THE PLANS TO INSURE STABILITY AND MAINTAIN TREES IN AN UPRIGHT POSITION. TREES SHALL USE ARBORTIE AS PER DETAIL SHEET. PALMS SHALL USE WOOD BRACING PER DETAIL SHEET.

15. MULCHING: PROVIDE A THREE INCH (3") MINIMUM LAYER OF SPECIFIED MULCH OVER THE ENTIRE AREA OF EACH SHRUB BED, GROUNOCOVER AND VINE BED AND TREE PIT (FOR TREES AND PALMS, MIN. THREE INCH (3") FROM EDGE OF TRUNKS). – UNLESS OTHER REQUIRED BY LOCAL CODES AND SPECIFIED AS SUCH.

16. SYSTEMIC HERBICIDE WEED CONTROL ALL PLANT BEDS SHALL BE KEPT FREE OF NOXIOUS WEEDS UNTIL FINAL ACCEPTANCE OF WORK. IF DIRECTED BY THE OWNER OR THEIR DESIGNEE, A SYSTEMIC HERBICIDE SHALL BE APPLIED FOR WEED CONTROL BY QUALIFIED PERSONNEL TO ALL PLANTING AREAS IN SPOT APPLICATIONS PER MANUFACTURER'S PRECAUTIONS AND SPECIFICATIONS. AFTER MULCH HAS BEEN APPLIED TO PLANTING BEDS AND TREE RINGS, TREAT ALL MULCHED AREAS WITH AN APPROVED PRE—EMERGENT HERBICIDE AT AN APPLICATION RATE RECOMMENDED BY THE MANUFACTURER.

0. LAWN SODDING

STENOTAPHRUM SECUNDATUM, V. 'FLORITAM' UNLESS OTHERWISE NOTED. (ST. AUGUSTINE SOLID SOD).
1. THE WORK CONSISTS OF LAWN BED PREPARATION, SOIL PREPARATION, AND SODDING:
COMPLETE IN STRICT ACCORDANCE WITH THE SPECIFICATIONS AND THE APPLICABLE DRAWINGS TO PRODUCE A GRASS LAWN ACCEPTABLE TO THE OWNER AND GOVERNING AGENCIES.
2. LAWN BED PREPARATION: ALL AREAS THAT ARE TO BE SODDED SHALL BE CLEARED OF ANY ROUGH GRASS, WEEDS, AND DEBRIS, AND THE SOIL BROUGHT TO AN EVEN PREPARED GRADE TO ALLOW FOR SOIL PREPARATION BELOW.

3. SOIL PREPARATION: PREPARE LOOSE BED FOUR INCHES (4") DEEP. APPLY FERTILIZER AT A RATE OF TWENTY (20) POUNDS PER ONE THOUSAND (1000) SQUARE FEET. APPLICATION SHALL BE UNIFORM, UTILIZING COMMERCIAL BROADCAST SPREADERS. MIX FERTILIZER THOROUGHLY WITH THE SOIL TO A DEPTH OF THREE INCHES (3"). HAND RAKE UNTIL ALL BUMPS AND DEPRESSIONS ARE REMOVED. WET PREPARED AREA THOROUGHLY TO PREPARE FOR SOD INSTALLATION.

4. SODDING: THE CONTRACTOR SHALL SOD ALL PERVIOUS AREAS THAT ARE NOT PAVED OR PLANTED AS DESIGNATED ON THE DRAWINGS WITHIN THE CONTRACT LIMITS TO CREATE A UNIFORM, NEW TURF BLANKET FOR THE SITE.

a) THE SOD SHALL BE CERTIFIED TO MEET FLORIDA STATE BOARD SPECIFICATIONS, ABSOLUTELY TRUE TO VARIETY TYPE, AND FREE FROM WEEDS, FUNGUS, INSECTS, AND DISEASE OF ANY KIND, SOD PANELS SHALL BE LAID TIGHTLY TOGETHER TO MAKE A SOLID, SODDED LAWN AREA.

b) SOD SHALL BE LAID IN ROWS. WITH EVERY OTHER ROW STAGGERED HALFWAY BETWEEN THE NEXT TO INSURE NO CONTINUOUS STACKED JOINTS. SEW JOINTS OF SOD TO INSURE A TIGHT FIT AT JOINTS.

c) SOD SHALL BE LAID UNIFORMLY AGAINST THE EDGES OF ALL CURBS AND OTHER HARDSCAPE ELEMENTS, PAVED AND PLANTED AREAS. ADJACENT TO BUILDINGS, A FOUR INCH (4") MULCH STRIP SHALL BE PROVIDED. IMMEDIATELY FOLLOWING SOD LAYING, THE LAWN AREAS SHALL BE ROLLED WITH A LAWN ROLLER CUSTOMARILY USED FOR SUCH PURPOSES, AND THEN THOROUGHLY IRRIGATED TO THOROUGHLY MOISTEN THE SOIL BENEATH. IF, IN THE OPINION OF THE OWNER, TOP—DRESSING IS NECESSARY AFTER ROLLING TO FILL THE VOIDS BETWEEN THE SOD PANELS AND TO EVEN OUT INCONSISTENCIES IN THE SOD, CLEAN SAND AS APPROVED BY THE LANDSCAPE ARCHITECT OR OWNER SHALL BE UNIFORMLY SPREAD OVER THE ENTIRE SURFACE OF THE SOD AND THOROUGHLY WATERED IN.

5. DURING DELIVERY, PRIOR TO AND DURING THE PLANTING OF THE LAWN AREAS, THE SOD PANELS SHALL AT ALL TIMES BE PROTECTED FROM EXCESSIVE DRYING AND UNNECESSARY EXPOSURE OF THE ROOTS TO THE SUN. ALL SOD SHALL BE INSTALLED DURING THE DAY OF ITS ARRIVAL.

6. LAWN MAINTENANCE:

a) WITHIN THE SITE, THE CONTRACTOR SHALL PRODUCE A DENSE, WELL ESTABLISHED LAWN. THE CONTRACTOR SHALL BE RESPONSIBLE FOR THE REPAIR AND RE—SODDING OF ALL ERODED, SUNKEN OR BARE SPOTS UNTIL CERTIFICATION OF ACCEPTABILITY BY OWNER OR AS IN THE ORIGINAL WORK SCOPE AND PROCESS (INCLUDING REGRADING. IF NECESSARY).

b) WATER EVERY DAY FOR FOURTEEN (14) SUCCESSIVE DAYS, THEN WATER THREE (3) TIMES PER WEEK (AT EVEN INTERVALS) UNTIL FULLY ESTABLISHED OR UNTIL AUTOMATIC IRRIGATION SYSTEM IS FULLY OPERATIONAL AND PROGRAMMED ACCORDINGLY. COORDINATE WATERING SCHEDULE WITH NATURAL RAINFALL . RAINFALL EVENTS IN DURATION OF TWENTY (20) MINUTES OR MORE THAT PRODUCE MORE THAN A HALF INCH (1/2") OF PRECIPITATION WILL NEGATE THE NEED FOR WATERING THE FOLLOWING DAY IF PREVIOUSLY SCHEDULED. ALL WATERING SHALL BE OF SUFFICIENT QUANTITY TO WET OR RESTORE WATER TO A DEPTH OF FOUR INCHES (4").

P. CLEANUP

1. UPON COMPLETION OF ALL PLANTING WORK AND BEFORE FINAL ACCEPTANCE, THE CONTRACTOR SHALL REMOVE ALL MATERIAL, EQUIPMENT, AND DEBRIS RESULTING FROM HIS WORK. ALL PAVED AREAS SHALL BE BROOM CLEANED AND THE SITE LEFT IN A NEAT AND ACCEPTABLE CONDITION AS APPROVED BY THE OWNER'S AUTHORIZED REPRESENTATIVE.

Q. PLANT MATERIAL MAINTENANCE

1. ALL PLANTS AND PLANTING MATERIALS INCLUDED UNDER THIS CONTRACT SHALL BE MAINTAINED BY WATERING, CULTIVATING, SPRAYING, AND ALL OTHER OPERATIONS (SUCH AS RE—STAKING OR REPAIRING GUY SUPPORTS) NECESSARY TO INSURE A HEALTHY CONDITION BY THE CONTRACTOR UNTIL CERTIFICATION OF ACCEPTABILITY BY THE OWNER OR OWNER'S DESIGNEE. MAINTENANCE AFTER THE CERTIFICATION OF ACCEPTABILITY SHALL BE IN ACCORDANCE WITH THE SPECIFICATIONS IN THIS SECTION. CONTRACTORS ARE REQUESTED TO PROVIDE A BID ESTIMATE TO COVER LANDSCAPE AND IRRIGATION MAINTENANCE FOR A PERIOD OF NINETY (90) CALENDAR DAYS COMMENCING AFTER ACCEPTANCE (SEE NEXT SECTION).

R. MAINTENANCE (ALTERNATE BID ITEM)

1. CONTRACTORS ARE REQUESTED TO PROVIDE A BID ESTIMATE FOR LANDSCAPE AND IRRIGATION MAINTENANCE FOLLOWING THE INITIAL 90—DAY MAINTENANCE PERIOD ON A COST PER MONTH BASIS.

S. GUARANTEE

1. THE LIFE AND SATISFACTORY CONDITION OF ALL PLANT MATERIAL INSTALLED BY THE CONTRACTOR SHALL BE GUARANTEED BY THE CONTRACTOR FOR A MINIMUM OF ONE (1) CALENDAR YEAR COMMENCING AT THE TIME OF CERTIFICATION OF ACCEPTABILITY BY THE OWNER OR OWNER'S DESIGNEE.

2. THE LIFE AND SATISFACTORY CONDITION OF ALL SOD INSTALLED BY THE CONTRACTOR SHALL BE GUARANTEED BY THE CONTRACTOR FOR A MINIMUM OF NINETY (90) CALENDAR DAYS, COMMENCING AT THE TIME OF CERTIFICATION OF ACCEPTABILITY BY THE OWNERS OR OWNER'S DESIGNEE.

3. REPLACEMENT: ANY PLANT NOT IN A HEALTHY, THRIVING GROWING CONDITION SHALL BE REMOVED FROM THE SITE AND REPLACED AS SOON AS WEATHER CONDITIONS PERMIT. SHOULD THE OWNER ELECT, TREES AND PALMS MAY BE GIVEN A PERIOD OF NINETY (90) DAYS BEFORE REMOVAL TO ALLOW THE CONTRACTOR TO RESURRECT THE TREE OR PALM IN QUESTION AND BRING IT TO A THRIVING, HEALTHY CONDITION. ALL REPLACEMENTS SHALL BE PLANTS OF LIKE KIND, CONDITION AND SIZE AS SPECIFIED IN THE PLANT LIST. THEY SHALL BE FURNISHED, PLANTED. AND MULCHED AS SPECIFIED WITHIN THESE SPECIFICATIONS, AT NO ADDITIONAL COST TO THE OWNER. ANY REPAIRS FROM THIS REPLACEMENT MATERIAL SHALL BE SOLELY THE CONTRACTOR'S RESPONSIBILITY. REPLACEMENT MATERIAL SHALL BE GUARANTEED TO A ONE (1) YEAR PERIOD FROM THE DAY OF REPLACEMENT ACCEPTANCE BY THE OWNER. SHOULD REPLACEMENT MATERIAL FAIL WITHIN THE GUARANTEE PERIOD, OWNER MAY OPT FOR A CREDIT OF THE MONETARY AMOUNT FOR THE REPLACEMENT MATERIALS, AT A RATE OF THE ORIGINAL CONTRACT BID RATE, IN LIEU OF AN ADDITIONAL REPLACEMENT.

4. IN THE EVENT THE OWNER ELECTS NOT TO CONTRACT WITH THE CONTRACTOR FOR LANDSCAPE (AND IRRIGATION) MAINTENANCE, THE CONTRACTOR IS ENCOURAGED TO VISIT THE PROJECT SITE PERIODICALLY DURING THE ONE (1) YEAR WARRANTY PERIOD TO EVALUATE MAINTENANCE PROCEDURES BEING PERFORMED BY THE OWNER OR THEIR DESIGNEE, AND SHALL NOTIFY THE OWNER IN WRITING OF MAINTENANCE PROCEDURES OR CONDITIONS WHICH THREATEN VIGOROUS AND HEALTHY PLANT GROWTH OF ITEMS UNDER REPLACEMENT WARRANTY. IT IS SUGGESTED SUCH SITE VISITS SHALL BE CONDUCTED A MINIMUM OF ONCE PER MONTH FOR A PERIOD OF TWELVE (12) MONTHS FROM THE DATE OF ACCEPTANCE.

T. FINAL INSPECTION AND ACCEPTANCE OF WORK

1. FINAL INSPECTION BY OWNER OR THEIR DESIGNEE AT THE END OF THE GUARANTEE PERIOD SHALL INCLUDE PLANTING, CONSTRUCTION AND ALL OTHER INCIDENTAL WORK PERTAINING TO THIS CONTRACT. ANY PLANTS NOT MEETING THE CRITERIA OF HEALTHY, VIGOROUS, AND THRIVING AT THIS TIME, AND THAT HAVE NOT ALREADY BEEN REPLACED PREVIOUSLY UNDER SAID WARRANTY, SHALL BE SUBJECT TO THE SAME ONE (1) YEAR GUARANTEE (OR AS SPECIFIED BY THE OWNER IN WRITING) BEGINNING WITH THE TIME OF REPLACEMENT AND ENDING WITH THE SAME INSPECTION AND ACCEPTANCE HEREIN DESCRIBED.

U. GRADING & DRAINAGE NOTES

1. PRIOR TO COMMENCING ANY EXCAVATION WORK, THE CONTRACTOR SHALL NOTIFY ALL UTILITY COMPANIES IN ACCORDANCE WITH THE "DIG SAFE" NOTIFICATION PROCEDURES PROMOTED BY THE RESPECTIVE UTILITY COMPANIES IN FLORIDA, CALL FLORIDA SUNSHINE AT 811.

2. CONTRACTOR SHALL BLEND NEW EARTHWORK SMOOTHLY INTO EXISTING , PROVIDING VERTICAL CURVES OR ROUNDINGS AT ALL TOP AND BOTTOM OF SLOPES.

3. PITCH EVENLY BETWEEN SPOT GRADES. ALL PAVED AREAS MUST PITCH TO DRAIN AT A MINIMUM SLOPE OF ONE—EIGHTH INCH (1/8") PER FOOT. ANY DISCREPANCIES NOT ALLOWING THIS TO OCCUR SHALL BE REPORTED TO THE OWNER PRIOR TO CONTINUING WORK.

4, WHERE NEW PAVING OR EARTHWORK MEETS EXISTING PAVING OR EARTHWORK, SMOOTHLY BLEND LINE AND GRADE OF EXISTING WITH NEW, WHERE EXISTING VEGETATION IS TO REMAIN, MEET EXISTING GRADES; DO NOT FILL ABOVE BASAL FLARE OF EXISTING TREES.

V. UTILITY PLAN NOTES

1. CONTRACTOR SHALL INSTALL SCHEDULE 40 PVC CONDUIT (SLEEVES) FOR ALL IRRIGATION PIPING UNDER ALL PAVEMENT AREAS TO CONNECT ALL LANDSCAPE AREAS.

W. SITE PREPARATION

1. PRIOR TO CONSTRUCTION, THE CONTRACTOR SHALL MEET THE OWNER AND IDENTIFY TREES AND SHRUBS WHICH ARE TO BE PROTECTED AS WELL AS THOSE WHICH ARE TO BE REMOVED. DO NO CLEARING WITHOUT A CLEAR UNDERSTANDING OF EXISTING CONDITIONS TO BE PRESERVED.

2. TREES AND SHRUBS TO REMAIN SHALL BE PROTECTED BY THE INSTALLATION OF FENCING AT THE DRIP LINE OR AS DIRECTED BY THE OWNER (SEE LANDSCAPE DETAIL SHEET). PROTECTIVE FENCING SHALL BE INSTALLED PRIOR TO CONSTRUCTION, PROTECTIVE FENCING SHALL BE SUFFICIENT TO PREVENT CONSTRUCTION EQUIPMENT FROM COMPACTING SOIL AT THE ROOT ZONE AND DAMAGING TRUNKS AND BRANCHES.

3. IF, IN ORDER TO PERFORM EXCAVATION WORK, IT SHOULD BECOME NECESSARY TO CUT ROOTS OF PLANTS TO BE SAVED, SUCH ROOTS SHOULD BE CUT NEATLY WITH A SMOOTH CLEAN CUT BY A SHARP SAW, COVERED WITH BURLAP, AND KEPT MOIST UNTIL ROOTS ARE BACK FILLED. TEARS OR JAGGED CUTS TO ROOTS ARE UNACCEPTABLE.

4. TREE AND SHRUB REMOVAL SHALL INCLUDE THE FILLING, CUTTING, GRUBBING OUT OF ENTIRE ROOT SYSTEMS AND SATISFACTORY OFF—SITE DISPOSAL OF ALL TREES, SHRUBS, STUMPS, VEGETATIVE AND EXTRANEOUS DEBRIS PRODUCED BY THE REMOVAL OPERATIONS.

5. CONTRACTOR IS RESPONSIBLE FOR ANY DAMAGE INSIDE AND OUTSIDE THE LIMITS OF CONSTRUCTION DUE TO HIS CONTRACT OPERATIONS.

6. ALL REFUSE, DEBRIS, UNSUITABLE MATERIALS AND MISCELLANEOUS MATERIALS TO BE REMOVED SHALL BE LEGALLY DISPOSED OF OFF—SITE BY CONTRACTOR.

7. ALL INVASIVE EXOTIC VEGETATION SHALL BE DISPOSED OF OR TREATED AS PER THE LOCAL OR REGIONAL GOVERNING AUTHORITIES, REQUIREMENTS OR RECOMMENDATIONS.

X. ROOT CONTROL BARRIER

1. ROOT CONTROL PRODUCT SHALL BE A BIOLOGICAL BARRIER PRODUCT. PRODUCT SHALL BE 810—BARRIER ROOT CONTROL SYSTEM, AS MANUFACTURED BY BBA FIBERWEB/REEMAY, INC. AND DISTRIBUTED BY HORT ENTERPRISES, INC.
HORT ENTERPRISES, INC.
P.O. BOX 2448
POMPANO BEACH, FL 33061
1—800—966—4678

2. PRODUCT SHALL BE A BIOLOGICAL BARRIER UTILIZING LIME—RELEASE CAPSULES INTEGRATED INTO A GEOTEXTILE FABRIC. ACTIVE HERBICIDE SHALL BE TRIFLURALIN, AND MINIMUM TIME RELEASE OF EFFECTIVE PRODUCT SHALL BE 1—5 YEARS IN THE MOST ADVERSE CONDITIONS FOR SUCH A PRODUCT.

3. PRODUCT SHALL BE INSTALLED PER MANUFACTURER'S SPECIFICATIONS AND INSTRUCTIONS FOR ROOT CONTROL SYSTEMS.

4. USE PRODUCT WHERE TREES ARE WITHIN EIGHT FEET (8') OR LESS OF HARDSCAPE SURFACES INCLUDING CURBS, SIDEWALKS, STEPS, AND ROADWAYS.

5. SPECIFY 1 9.5" WIDTH OPTION.

6. WHERE CONDITIONS REQUIRE PRODUCT AS SET FORTH IN NO. 4 ABOVE, USE PRODUCT AT LEAST TEN FEET (10') IN EITHER DIRECTION FROM THE CENTER OF TRUNK ALONG LINEAR FEATURES SUCH AS CURBS, WALKWAYS, ETC. THE INTENT OF THIS SPECIFICATION IS TO PROVIDE A ROOT CONTROL SYSTEM WHERE ROOTS WOULD LIKELY CAUSE PHYSICAL DAMAGE TO ADJACENT HARDSCAPE SURFACES, FOUNDATIONS, OR OTHER ELEMENTS THAT MAY RECEIVE DAMAGE FROM ROOT SYSTEMS OF TREES.

7. SEE WWW.BIOBARRIER.COM FOR ADDITIONAL INFORMATION AND PRODUCT SPECIFICATION.

Y. IRRIGATION

1. CONTRACTOR TO PROVIDE AN IRRIGATION DESIGN FOR BOTH LAWN AND BED AREAS. DESIGN TO BE SUBMITTED TO PROJECT LANDSCAPE ARCHITECT FOR REVIEW AND APPROVAL. CONTRACTOR TO VERIFY STATIC PRESSURE PRIOR TO DESIGN. CONTRACTOR IS RESPONSIBLE FOR ANY PRESSURE REDUCING DEVICES REQUIRED TO MEET PRESSURE REQUIREMENTS. SYSTEM DESIGN TO SHOW ALL VALVES, PIPING, HEADS, BACKFLOW PREVENTION, METERS, AND CONTROLLERS. ALL SLEEVES IN PAVEMENT AREAS MUST BE SHOWN. THE CONTRACTOR SHALL BE RESPONSIBLE FOR BACKFLOW PREVENTION DEVICE INSTALLATION AND PERMITTING. CONTRACTOR SHALL NOT INSTALL IRRIGATION IN RIGHT—OF—WAY UNLESS REQUIRED BY CITY. NETAFIM DRIP IRRIGATION TO BE INSTALLED IMMEDIATELY AROUND BUILDING TO PREVENT WATER SPRAY ON BUILDING, WALKS, AND WINDOWS. NETAFIM PIPING TO BE BURIED JUST BENEATH SOIL SURFACE AND COVERED INSTALLED BY AN OWNER APPROVED CONTACTOR .

2. DESIGNED SYSTEM SHALL CONSIST OF AN AUTOMATIC, UNDERGROUND IRRIGATION SYSTEM PROVIDING 100% COVERAGE WITH 100% OVERLAP, AND CONTAINING A RAIN SENSOR INSTALLED BY AN OWNER APPROVED CONTACTOR. THIS SYSTEM SHALL BE INSTALLED AND OPERATIONAL WITHIN TEN (10) DAYS OF THE INITIAL LANDSCAPE INSTALLATION.

SITE NOTES

1. CONTRACTOR SHALL VERIFY ALL EXISTING CONDITIONS IN THE FIELD AND REPORT ANY DISCREPANCIES IN THE SITE SURVEY TO THE OWNER PRIOR TO STARTING WORK.

GENERAL PLANTING NOTES

1. THE CONTRACTOR SHALL SUPPLY ALL PLANT MATERIALS IN QUANTITIES SUFFICIENT TO COMPLETE THE PLANTING SHOWN ON THIS DRAWING.

2. ALL BIODEGRADABLE BURLAP SHALL BE UNTIED AND PULLED DOWN TO EXPOSE THE TOP 1/3 OF THE BALL. WIRE BASKETS AND OTHER NON—BIODEGRADABLE MATERIALS ATTACHED TO PLANTS SHALL BE REMOVED PRIOR TO PLANTING. CARE SHALL BE TAKEN NOT TO BREAK OR DISTURB ROOT BALL OF PLANTS.

3. ALL PLANTS SHALL BE WATERED BY HAND IN SUFFICIENT QUANTITIES TO THOROUGHLY WET ENTIRE ROOT SYSTEM IMMEDIATELY AFTER PLANTING.

4. PLANTS SHALL BE GUARANTEED TO A PERIOD OF ONE (1) YEAR AFTER ACCEPTANCE OF THE PROJECT AND SHALL BE VIGOROUS AND THRIVING AT THE END OF THE GUARANTEE PERIOD SEE SECTIONS S, GUARANTEE FOR MORE DETAILS.

5. CONTRACTOR SHALL LOCATE AND VERIFY ALL EXISTING UTILITY LINES PRIOR TO PLANTING AND SHALL REPORT ANY CONFLICTS TO THE OWNER.

6. CONTRACTOR SHALL FAMILIARIZE HIM/HER SELF WITH THE LIMITS OF WORK AND EXISTING CONDITIONS AND VERIFY ALL INFORMATION. IF DISCREPANCIES EXIST, CONTRACTOR SHALL NOTIFY OWNER OR OWNER'S DESIGNEE IN WRITING WITHIN SEVEN (7) CALENDAR DAYS OF NOTICE TO PROCEED.

7. CONTRACTOR SHALL VERIFY LOCATIONS OF ALL UNDERGROUND UTILITIES AND OBTAIN AS—BUILT INFORMATION. DRAWINGS WERE PREPARED ACCORDING TO THE BEST INFORMATION AVAILABLE AT THE TIME. CONTRACTOR SHALL NOTIFY OWNER'S REPRESENTATIVE IN WRITING WITHIN SEVEN (7) CALENDAR DAYS OF NOTICE TO PROCEED OF ANY DISCREPANCIES.

8. CONTRACTOR SHALL NOTIFY ALL NECESSARY UTILITY COMPANIES FORTY—EIGHT (48) HOURS MINIMUM PRIOR TO DIGGING FOR VERIFICATION OF ALL UNDERGROUND UTILITIES AND OTHER OBSTRUCTIONS AND COORDINATE WITH OWNER'S DESIGNEE IN WRITING PRIOR TO INITIATING OPERATIONS.

9. CONTRACTOR SHALL TAG AND NUMBER ALL PLANT MATERIAL TO BE RELOCATED. THE CONTRACTOR SHALL FULLY ASSIST AND COORDINATE THIS WORK WITH THE OWNER'S DESIGNEE PRIOR TO INITIATING FIELD DIGGING THE TREES.

10. LOCATIONS OF RELOCATED PLANT MATERIAL ARE APPROXIMATED ON THE DRAWINGS. EXACT LOCATIONS OF RELOCATED PLANT MATERIAL WILL BE CLARIFIED BY THE OWNER'S DESIGNEE ON SITE.

11. THE CONTRACTOR SHALL BEAR ALL COSTS OF TESTING SOILS, AMENDMENTS, ETC. ASSOCIATED WITH THE WORK AND INCLUDED IN THE SPECIFICATIONS.

12. TYPICALLY, SHRUB AND GROUNDCOVER PLANTINGS ARE SHOWN IN MASS PLANTING BEDS. PLANTS SHALL BE PLACED ON A LINEAR SPACING CONFIGURATION AROUND BUILDING FOUNDATION AS SHOWN ON DRAWING. PLANT CENTER TO CENTER DIMENSIONS (O.C.) ARE LISTED ON THE PLANT LIST. FOR PERIMETER AND PARKING ISLAND SPACING, USE THE TRIANGULAR SPACING METHOD.

13. CONTRACTOR SHALL FIELD STAKE THE LOCATIONS OF ALL PLANT MATERIAL PRIOR TO INITIATING INSTALLATION FOR THE REVIEW AND APPROVAL OF THE OWNER'S DESIGNEE.

14. CONTRACTOR SHALL FIELD ADJUST LOCATION OF PLANT MATERIAL AS NECESSARY TO AVOID DAMAGE TO ALL EXISTING UNDERGROUND UTILITIES AND/OR EXISTING ABOVE GROUND ELEMENTS. ALL CHANGES REQUIRED SHALL BE COMPLETED AT THE CONTRACTOR'S EXPENSE AND SHALL BE COORDINATED WITH THE OWNER'S DESIGNEE.

15. ALL PLANTING AREAS, UNLESS OTHERWISE NOTED, SHALL INCLUDE THREE INCH (3") LAYER OF MULCH AS PER THE SPECIFICATIONS.

16. ALL TREES PLANTED IN LAWN AREA SHALL RECEIVE A THREE FOOT DIAMETER (3') MULCH RING AT DEPTH OF THREE INCHES (3").

17. ALL EXISTING TREES TO REMAIN IN LAWN AREA SHALL RECEIVE A MULCH RING TWO FEET (2') OUT FROM EDGE OF TRUNK OR TO THE LIMIT OF THE ADJACENT LAWN AREA AT A DEPTH OF THREE INCHES (3") AS PER THE SPECIFICATIONS,

18. ANY SUBSTITUTIONS IN SIZE AND/OR PLANT MATERIAL MUST BE APPROVED BY THE OWNER'S DESIGNEE IN WRITING. ALL PLANTS WILL BE SUBJECT TO APPROVAL BY OWNER'S DESIGNEE BEFORE PLANTING CAN BEGIN.

19. PLANT LIST QUANTITIES ARE PROVIDED FOR CONVENIENCE ONLY. IN THE EVENT OF QUANTITY DISCREPANCIES, THE DRAWING SHALL TAKE PRECEDENCE. ANY DISCREPANCIES SHALL BE BROUGHT TO THE ATTENTION OF THE LANDSCAPE ARCHITECT.

20. CONTRACTOR SHALL REFER TO THE LANDSCAPE PLANTING DETAILS, PLANT LIST, GENERAL NOTES AND THE PROJECT MANUAL AND SPECIFICATIONS FOR FURTHER AND COMPLETE INSTRUCTIONS.

21. ALL UTLITY BOXES, CLEANOUTS, ETC., SHALL BE PAINTED GREEN IF IN GRASS AREAS AND BROWN IF IN MULCH AREAS.

22. THIS SITE MAY CONTAIN EXISTING TREES WHICH REQUIRE TRIMMING AND/OR PRUNING. THE LANDSCAPE COMPANY/CONTRACTOR MUST HAVE A CERTIFIED ARBORIST ON STAFF TO ENSURE PROPER ISA HORTICULTURAL PROCEDURES ARE FOLLOWED REGARDING THE TRIMMING, PRUNING, TRANSPLANTING, ETC. OF THESE TREES.

THOMAS ENGINEERING GROUP
CIVIL ENGINEERS - PROJECT MANAGERS - LAND PLANNING - LANDSCAPE ARCHITECTS
1000 CORPORATE DR. SUITE 250 FT. LAUDERDALE, FL 33334 P: 954-202-7000
4950 W. KENNEDY BLVD. SUITE 600 TAMPA, FL 33609 P: 813-379-4100
125 W INDIANTOWN RD. SUITE 206 JUPITER, FL 33458 P: 561-203-7503

THE INFORMATION, DESIGN AND CONTENT OF THIS PLAN ARE PROPRIETARY AND SHALL NOT BE COPIED OR USED FOR ANY PURPOSE WITHOUT PRIOR WRITTEN AUTHORIZATION FROM THOMAS ENGINEERING GROUP, LLC. ONLY APPROVED, SIGNED AND SEALED PLANS SHALL BE UTILIZED FOR CONSTRUCTION PURPOSES © 2015 THOMAS ENGINEERING GROUP, LLC.

REVISIONS:

REV:	DATE:	COMMENT:	BY:
1	08-18-16	NEW SITE LAYOUT	JMG

KNOW WHAT'S BELOW
ALWAYS CALL 811
BEFORE YOU DIG
It's fast. It's free. It's the law.
www.callsunshine.com

PROJECT No.: FJ150025
DRAWN BY: RFJ
CHECKED BY: JMG
DATE: 04/19/16
CAD I.D.: FJ150025-LANDSCAPE PLAN

PROJECT:

AVENUE L RETAIL

FOR

EQUITAS

BLUE HERON BLVD. & AVENUE L
RIVIERA BEACH,
FLORIDA

THOMAS ENGINEERING GROUP
RADICE III
1000 CORPORATE DRIVE, SUITE 250
FORT LAUDERDALE, FL 33334
PH: (954) 202-7000
FX: (954) 202-7070
www.ThomasEngineeringGroup.com

MICHAEL D. GROSSWIRTH
REGISTERED LANDSCAPE ARCHITECT
December 5, 2016
FLORIDA LICENSE No. 6666871
FLORIDA BUSINESS CERT. OF AUTH. No. 27528

SHEET TITLE:

LANDSCAPE GENERAL NOTES

SHEET NUMBER:

L-4

Printed on Monday, December 05, 2016, 3:32 PM by Michael Grosswirth
R:\EQUITAS\FJ150025 – FAMILY DOLLAR, BLUE HERON & AVENUE L, RIVIERA BEACH\DWG\LANDSCAPE\FJ150025-LANDSCAPE PLAN---->LAYOUT: L-4 LANDSCAPE GENERAL NOTES

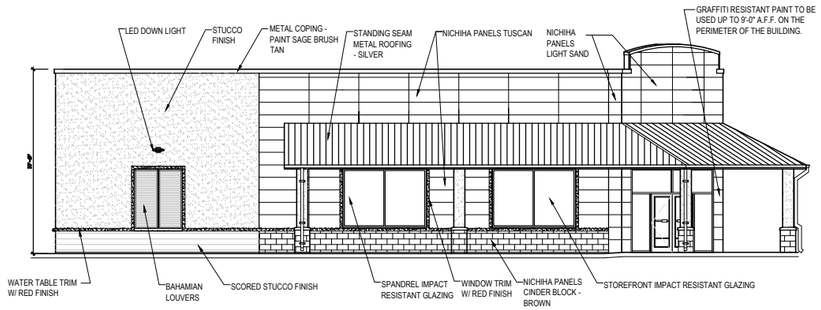

1 NORTH ELEVATION
SCALE = 1/8" = 1'-0"

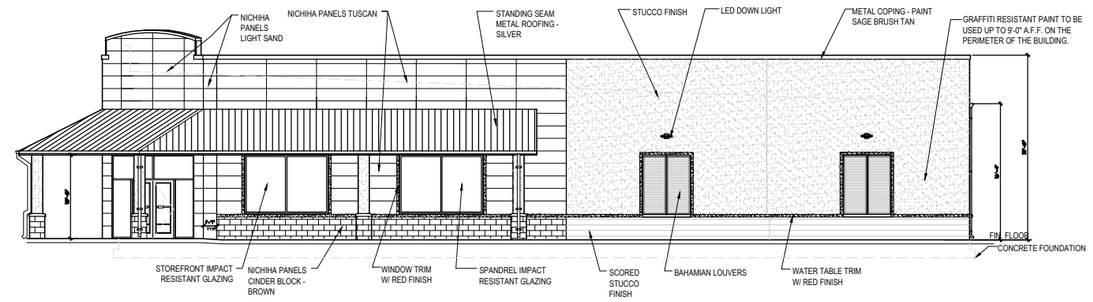

2 WEST ELEVATION
SCALE = 1/8" = 1'-0"

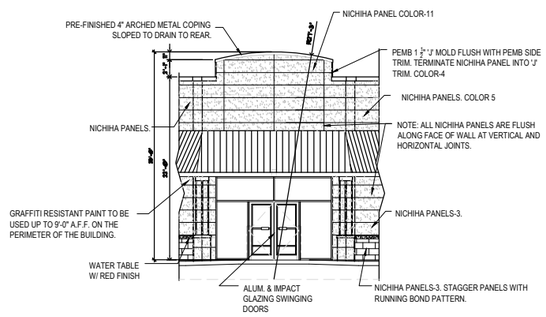

5 ENTRY ELEVATION
SCALE = 1/8" = 1'-0"

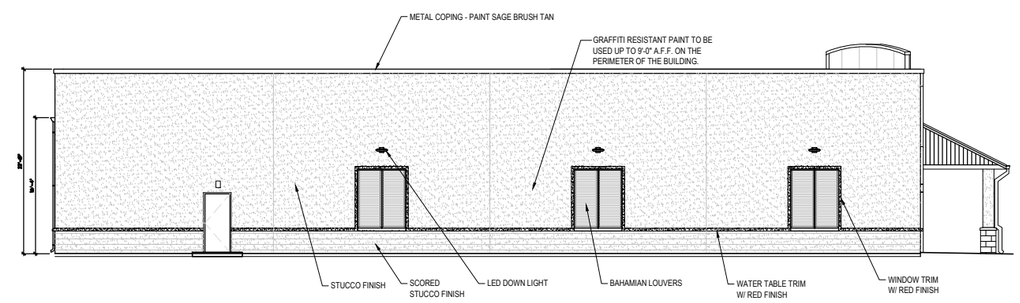

4 EAST ELEVATION
SCALE = 1/8" = 1'-0"

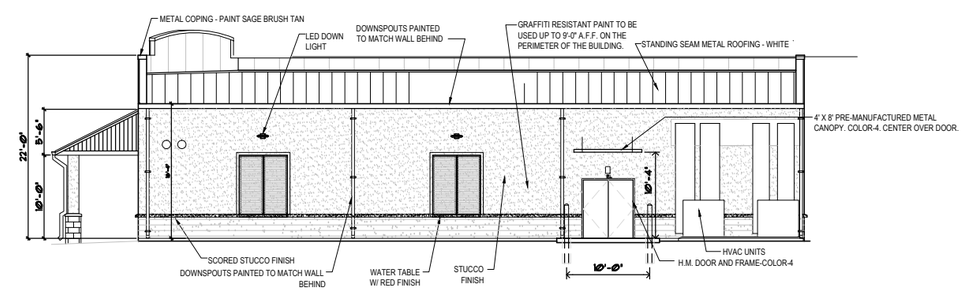

5 SOUTH ELEVATION
SCALE = 1/8" = 1'-0"

LIS EXPRESSLY RESERVES ITS COPYRIGHT AND ALL OTHER PROPERTY RIGHTS TO THESE DOCUMENTS AND THEIR DESIGN, HENCE, THEY ARE NOT TO BE REPRODUCED.

ARCHITECT / ENGINEER
LIS
ARCHITECTURE
ENGINEERING
LAND SURVEYING
AA 26002060 CA NO. 6853 LB10517
2572 West State Road 426
Suite 2054 Oviedo, FL 32765
Phone: (321) 244-0442
Facsimile: (321) 244-0419
21430 Palm Beach Blvd
Alva, FL 33920
Phone: (239) 693-0544
Facsimile: (239) 693-9828

CLIENT NAME
EQUITAS
2034 HAMPTON PLACE BLVD. SUITE 400
CHATTANOOGA, TN 34721

PROJECT NAME
AVENUE L RETAIL
STORE # 714415
1061 W. BLUE HERON BLVD. RIVERIA BEACH, FL

SHEET TITLE
Exterior Elevations

SEAL
ANTHONY E. EWEN
FL. REG. AR0009781

RELEASE	DATE

PROJECT NO.
2016-069

ISSUE DATE
4-22-16

DRAWN | CHECKED

SHEET NO.
A-2

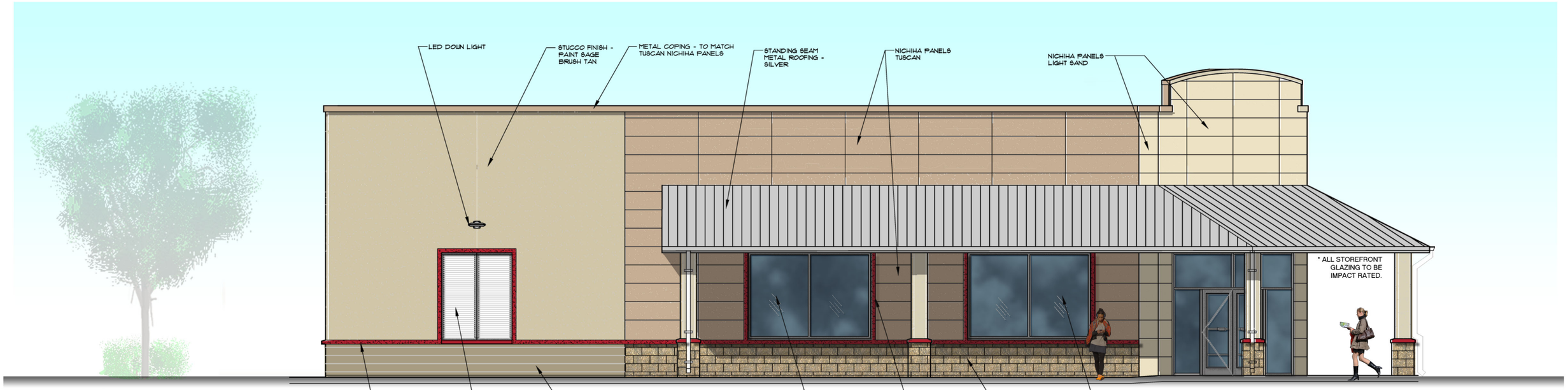

FRONT (NORTH) ELEVATION

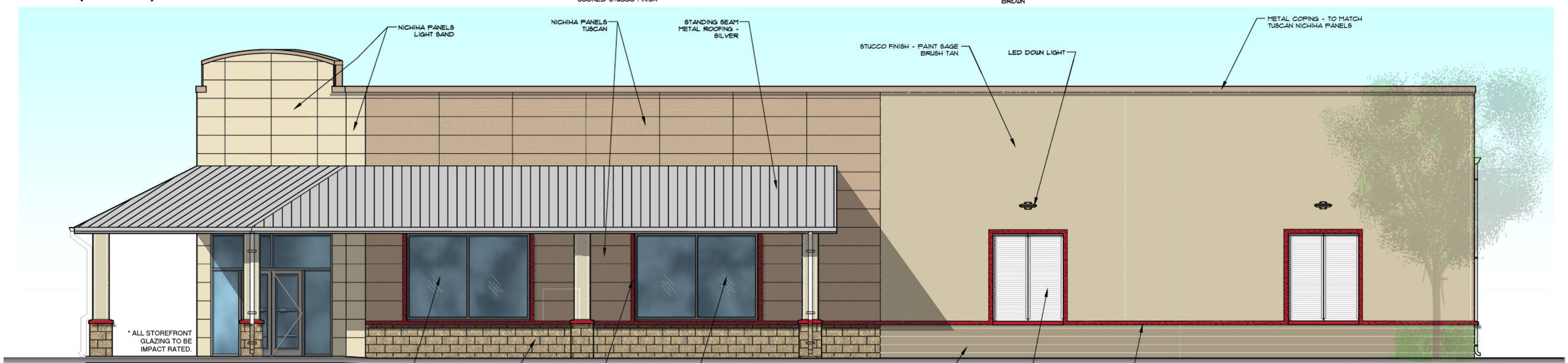

SIDE (WEST) ELEVATION

Graffiti resistant paint to be used up to 9'-0'' A.F.F. on the perimeter of the building.

Nichiha FIber Cement Panels Tuscan	Nichiha Fiber Cement Panels Light Sand	Benjamin Moore Sage Brush Tan	Benjamin Moore Safety Red	Metal Roof Standing Seam Galvilume Silver	Nichiha Fiber Cement Panel Cinder Block - Brown	Benjamin Moore to match Cinder Block Brown Nichiha panel

AVENUE L RETAIL

1061 W. Blue Heron Blvd. Riveria Beach, FL

LIS, LLC AA26002040
9-12-2016
PROJECT NO. 2016-069

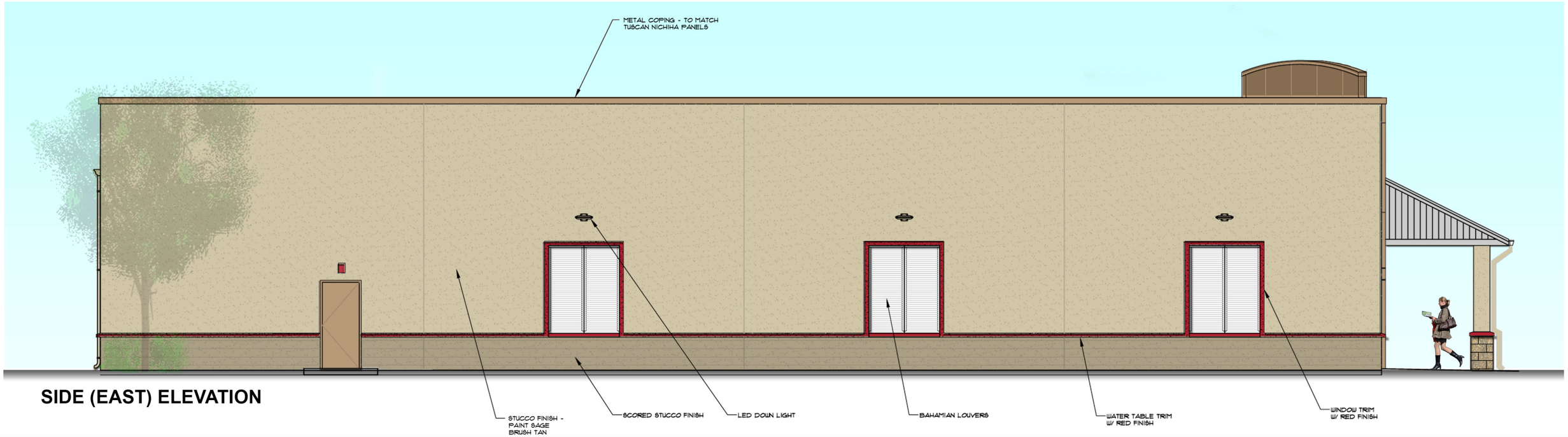

SIDE (EAST) ELEVATION

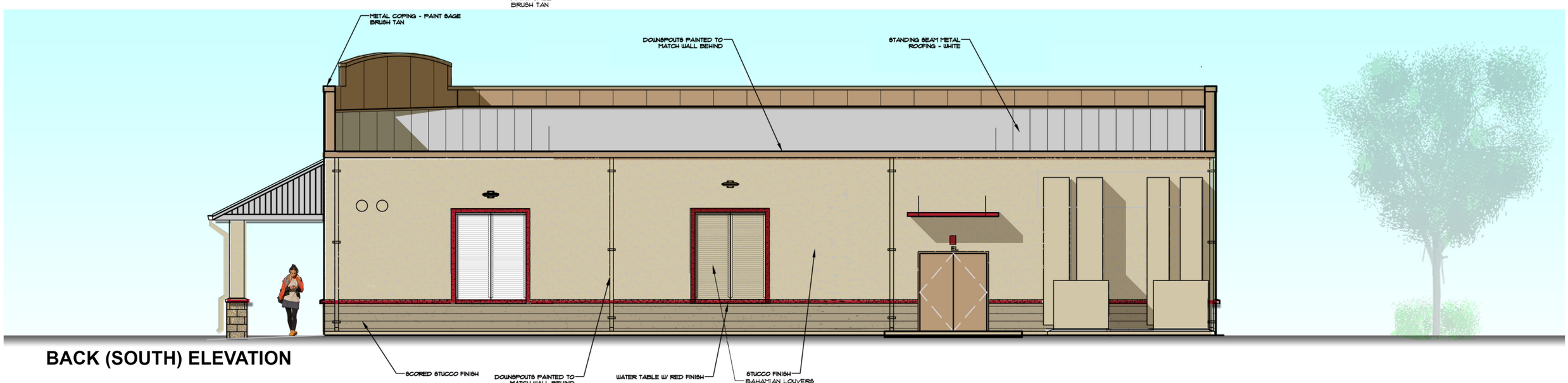

BACK (SOUTH) ELEVATION

Graffiti resistant paint to be used up to 9'-0'' A.F.F. on the perimeter of the building.

Nichiha FIber Cement Panels Tuscan	Nichiha Fiber Cement Panels Light Sand	Benjamin Moore Sage Brush Tan	Benjamin Moore Safety Red	Metal Roof Standing Seam Galvilume Silver	Nichiha Fiber Cement Panel Cinder Block - Brown	Benjamin Moore to match Cinder Block Brown Nichiha panel

AVENUE L RETAIL

1061 W. Blue Heron Blvd. Riveria Beach, FL

LIS, LLC AA26002040
9-12-2016
PROJECT NO. 2016-069

CITY OF RIVIERA BEACH EQUITAS MANAGEMENT GROUP, LLC. SP-16-16 LOCATION MAP

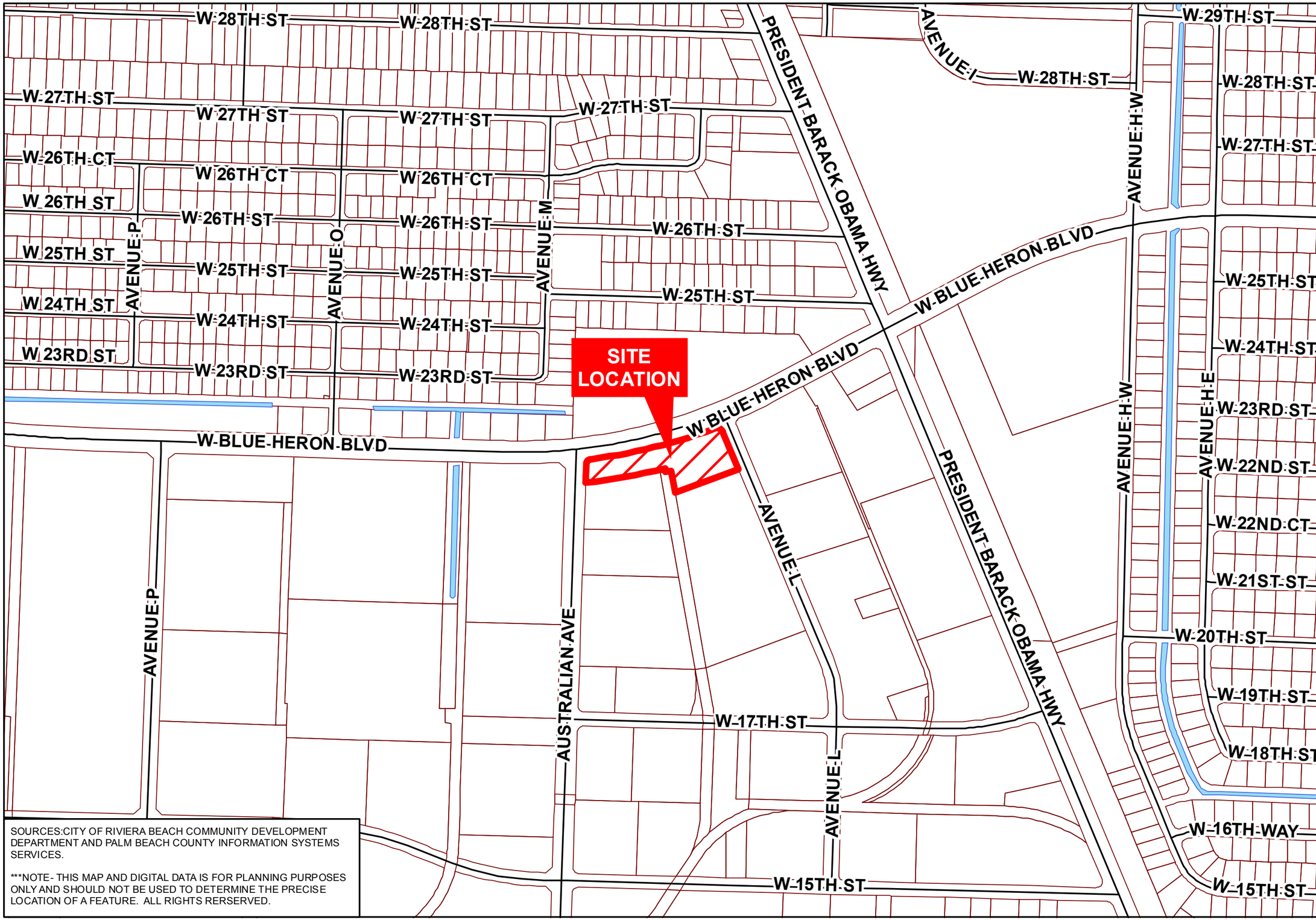

LEGEND

- STREETS
- CITY PARCELS
- WATER
- PROPERTY BOUNDARY ±1.93 ACRES
- MUNICIPALITIES

N

0 200 400
FEET

1 INCH = 400 FEET

CITY OF RIVIERA BEACH
DEPARTMENT OF
COMMUNITY DEVELOPMENT
600 W. BLUE HERON BLVD.
RIVIERA BEACH, FL 33404
(561) 845-4060
WWW.RIVIERABCH.COM

SOURCES:CITY OF RIVIERA BEACH COMMUNITY DEVELOPMENT DEPARTMENT AND PALM BEACH COUNTY INFORMATION SYSTEMS SERVICES.

***NOTE- THIS MAP AND DIGITAL DATA IS FOR PLANNING PURPOSES ONLY AND SHOULD NOT BE USED TO DETERMINE THE PRECISE LOCATION OF A FEATURE. ALL RIGHTS RERSERVED.

CITY OF RIVIERA BEACH EQUITAS MANAGEMENT GROUP, LLC. SP-16-16 AERIAL MAP

LEGEND

- STREETS
- CITY PARCELS
- PROPERTY BOUNDARY ±1.93 ACRES
- MUNICIPALITIES

N

0 50 100
FEET

1 INCH = 100 FEET

CITY OF RIVIERA BEACH
DEPARTMENT OF
COMMUNITY DEVELOPMENT
600 W. BLUE HERON BLVD.
RIVIERA BEACH, FL 33404
(561) 845-4060
WWW.RIVIERABCH.COM

SOURCES:CITY OF RIVIERA BEACH COMMUNITY DEVELOPMENT DEPARTMENT AND PALM BEACH COUNTY INFORMATION SYSTEMS SERVICES. AERIALS ARE 2015 TRUE COLOR.

***NOTE- THIS MAP AND DIGITAL DATA IS FOR PLANNING PURPOSES ONLY AND SHOULD NOT BE USED TO DETERMINE THE PRECISE LOCATION OF A FEATURE. ALL RIGHTS RERSERVED.

For Staff Use Only

City of Riviera Beach	Date:	Case Number:
Community Development Department 600 W. Blue Heron Boulevard Riviera Beach, Florida 33404	Project Title:	
	Fee Paid:	Notices Mailed:
Phone: (561) 845-4060 Fax : (561) 845-4038	1st Hearing:	2nd Hearing:
	Publication Dates (if required)	

UNIFORM LAND USE APPLICATION

(Please attach separate sheet of paper for required additional information)

Complete appropriate sections of Application and sign.

APPLICANT

Name of Property Owner(s): Shimonovitc Shraga

Mailing Address: 21950 Town Place Dr, Boca Raton FL 33433

Property Address: Southwest corner Blue Heron Blvd and Avenue L

Name of Applicant (if other than owner): Jason Gunther, Thomas Engineering Group, LLC

Home: ( ) Work: (561) 203-7503 Fax: (954) 202-7000

E-mail Address: jgunther@thomaseg.com

PLEASE ATTACH LEGAL DESCRIPTION

PROPERTY

Future Land Use Map Designation: Com Current Zoning Classification: CG

Square footage of site: 40,177 Property Control Number (PCN): 56-43-42-28-31-015-0010

Type and gross area of any existing non residential uses on site: 8,247sf Retail

Gross area of any proposed structure:

Is there a current or recent use of the property that is/was in violation of City Ordinance? [ ] Yes [✓] No

If yes, please describe:

Have there been any land use applications concerning all or part of this property in the last 18 months? [ ] Yes [✓] No

If yes, indicate date, nature and applicant's name:

Briefly describe use of adjoining property: North: Vacant

South: Public Works Maintenance Yard

East: Atlas Sign Industries

West: Vacant

REZONE

Requested Zoning Classification:

Is the requested zoning classification contiguous with existing?

Is a Special Exception necessary for your intended use? [ ] Yes [ ] No

Is a Variance necessary for your intended use? [ ] Yes [ ] No

FUTURE LAND USE		
	Existing Use:	Proposed Use:
	Land Use Designation:	Requested Land Use:
	Adjacent Land Uses: North:	South:
	East:	West:
	Size of Property Requesting Land Use Change:	

SPECIAL EXCEPTION	
	Describe the intended use requiring a Special Exception:
	Provide specific LDR ordinance section number and page number:
	How does intended use meet the standards in the Land Development Code?
	Demonstrate that proposed location and site is appropriate for requested use:
	Demonstrate how site and proposed building(s) have been designed so they are compatible with adjacent uses and neighborhoods:
	Demonstrate any landscaping techniques to visually screen use from adjacent uses:
	Demonstrate what is proposed to reduce the impact of any potential hazards, problems, public nuisances generated by use:
	Demonstrate how utilities and other service requirements of the use can be met:
	Demonstrate how the impact of traffic generated will be handled: On-site:
	Off-Site:
	Other:

VARIANCE	
	Describe the Variance sought:
	Demonstrate that the Variance is needed to overcome a hardship caused by the unique physical conditions of the site:
	Specify the minimum Variance requirements including: height, lot area, size of structure, size of yard, setback, buffer or open space:
	Other:

SITE PLAN

Describe proposed development:
Construct a Retail Store with Support Parking

Demonstrate that proposed use is appropriate to site:
Retail is an permitted use within CG zoning district.

Demonstrate how drainage and paving requirement will be met:
Exfiltration trench will provide water quality and flood attenuation

Demonstrate any landscaping techniques to visually screen use from adjacent uses:
Buffers along streets will provide aesthetic corridor for public.

Demonstrate what is proposed to reduce the impact of any potential hazards, problems, public nuisances generated by use:
Hours of operation and location will provide minimal nuisance.

Demonstrate how utilities and other service requirements of the use can be met:
Water and sewer connection is available to site. Dumpster is proposed

Demonstrate how the impact of traffic generated will be handled:
On-site: Adequate parking is provided on-site
Off-site: Traffic study is provided.

OTHER

COMMUNICATION TOWER CO-LOCATION REQUIREMENTS:

- Three sets of signed and sealed Construction documents, elevations and all equipment shelters, cabinets, Coax, telephone and power conduits identified. These plans will then be used to obtain the Building Permit.
- Antenna manufacture cut sheets including antenna size and shape.
- Zoning map of area with site clearly marked.
- Photos of existing building or tower and surrounding uses.
- Letter of non-interference and FCC compliance from applicant's Radio Frequency Professional.
- Map of surrounding carrier existing locations in all directions with type i.e. Guyed, Self-Support, Monopole, Rooftop.
- Letter of structural capacity and building code compliance.
- Notes on plan or letter demonstrating floor area coverage not in excess of restrictions
- Provide Photo Enhancements of proposal.
- Statement that proposal is in compliance with Environmental Regulations prior to permit issue.

Confirmation of Information Accuracy

I hereby certify that the information on this application is correct. The information included in this application is for use by the City of Riviera Beach in processing my request. False or misleading information may be punishable by a fine of up to five hundred dollars ($500.00) and imprisonment of up to thirty (30) days and may result in the summary denial of this application.

Signature

9-26-16
Date

Shraga Shimonovitc
21950 Town Place Drive
Boca Raton, FL 33433

September 12, 2016

TO: All applicable Governmental Permitting Agencies
City of Riviera Beach, Florida
Palm Beach County, Florida
State of Florida

RE: **Authorization of Agent**

This will serve as confirmation that the undersigned Shraga Shimonovitc, the owner of the property located at Southwest corner of Blue Heron Blvd and Avenue L, Riviera Beach, Florida, identified by tax folio no. 56-43-42-28-31-015-0010 (the "Property"), hereby appoints Equitas Management Group, LLC and/or Thomas Engineering Group, LLC, to act as its authorized agent concerning all city, county, state and governmental agency permits and applications, but only to the extent that such permits and applications pertain to the proposed Avenue L Retail development at the Property.

Shraga Shimonovitc

STATE OF FLORIDA)
) ss.
COUNTY OF PALM BEACH)

The foregoing instrument was acknowledged before me this 23 day of Sept, 2016, by Shraga Shimonovitc. He/she ☐ is personally known to me or ☑ has produced drivers license as identification.

Print Name: Joan Richardson
NOTARY PUBLIC

My Commission Expires: Sept 13, 2017

JOAN RICHARDSON
MY COMMISSION # FF 017055
EXPIRES: September 13, 2017
Bonded Thru Notary Public Underwriters

AGENT AUTHORIZATION FORM

Owner(s) of Record: Shimonovitc Shraga

STATE OF FLORIDA
COUNTY OF PALM BEACH

BEFORE ME, the undersigned authority personally appeared Please see attached Letter of Authorization

who, being first duly sworn upon oath and personal knowledge say(s) that they are the owner(s) of record of the following described real property:

the street address of which is: Southwest corner Blue Heron Blvd + Avenue L

and that we hereby appoint:

Name: Equitas Management Group, LLC.
Address: 2034 Hamilton Place Blvd, Suite 400
Chattanooga, TN 37421
Telephone: 423-296-1791

as our authorized agent, to file applications and papers with the City of Riviera Beach, and to represent me (us) at any Hearing regarding my (our) interest.

_____ (Seal)

_____ (Seal)

_____ (Seal)

Sworn to and subscribed before me this _____ day of _____, _____.

_____
Notary Public

THOMAS
ENGINEERING GROUP

THOMAS ENGINEERING GROUP
125 W. INDIANTOWN RD., STE. 206
JUPITER, FL 33458
P: 561-203-7503
F: 561-203-7721

August 31, 2016

City of Riviera Beach

600 West Blue Heron Boulevard

Riviera Beach, FL 33404

Site Plan Approval Request – Avenue L Retail SWC Blue Heron Boulevard and Avenue L

Dear City Staff:

This project proposes an 8,247sf retail store positioned on site as to engage the adjacent roadways being Blue Heron Boulevard and Avenue L. Specifically the building placement is at the 20 foot setback of Blue Heron Boulevard and the 15 foot setback of Avenue L.

The site proposes two driveways, one off of Blue Heron Boulevard and a second on Avenue L. The Blue Heron Driveway is centered on the proposed parcel line for this property and a cross access easement will be provided for the benefit of this parcel and the vacant remainder of land to the west. Supporting parking is proposed on the parcel wherein the required parking is the sum of the retail and storage components of the building, totaling 38 spaces which is the number of provided spaces on the plan.

This parcel is located in the Blue Heron Boulevard Arterial Corridor and as such the building elevations have been designed with embellished architectural features. The prominent feature being a wraparound covered porch at the store entrance.

Pervious concrete is proposed in the parking bays adjacent to both Blue Heron Boulevard and the southern parcel line. These pervious paved area are proposed and designed to accommodate the 30% pervious requirement for commercial developments within the City's Comprehensive Plan.

The project proposes installing curb and gutter and a 5 foot concrete sidewalk along the frontage with Avenue L as an offsite improvement which will benefit the users both on foot and driving in this location.

There are ambitions by the property owner to develop the remaining portion of the undeveloped land in the near future however at this time the type of use proposed is not known. This plan has

THOMAS
ENGINEERING GROUP

THOMAS ENGINEERING GROUP
125 W. INDIANTOWN RD., STE. 206
JUPITER, FL 33458
P: 561-203-7503
F: 561-203-7721

been designed specific to the joint access on Blue Heron Boulevard in consideration of the future development potential of the site.

The proposed use is harmonious with the zoning district, arterial corridor and acts as a buffer from the users of Blue heron Boulevard to the Public Works maintenance facility located south of the site.

Sincerely,

THOMAS ENGINEERING GROUP, LLC

Jason M. Gunther, P.E.

Branch Manager

THOMAS
ENGINEERING GROUP

THOMAS ENGINEERING GROUP
125 W. INDIANTOWN RD., STE. 206
JUPITER, FL 33458
P: 561-203-7503
F: 561-203-7721

August 31, 2016

City of Riviera Beach

600 West Blue Heron Boulevard

Riviera Beach, FL 33404

Concurrency Compliance Avenue L Retail

Traffic Generation - The Average daily Trips form this retail store are calculated at 166.35 trips per 1,000sf per section 31-715 of the city's code. Therefore, the projected average daily trips form this store are 1,372 trips.

Sanitary Sewer - The daily sanitary sewer demand from this retail store is calculated at 0.10 gallons per square foot of floor space per section 31-717 of the city's code. Therefore, 825 gallons of sanitary waste are projected from this use.

Potable Water - The daily potable water demand from this retail store is calculated at 0.10 gallons per square foot of floor space per section 31-716 of the city's code. Therefore, 825 gallons of potable water are projected for this use.

Drainage – The project proposes exfiltration trench in a volume sufficient to provide complete storage within the trench for a 3 year 1 day storm. Project size of 0.90 acres does not require an NPDES permit however an Erosion Control Plan will be provided and implemented.

Solid Waste - This use most resembles a drug store use for solid waste generation. Solid waste generation is calculated as 5 pounds per day per 100 square feet of store area per section 31-718 of the city's code. Therefore this use is projected to generate 412 pounds per day of solid waste.

Sincerely,

THOMAS ENGINEERING GROUP, LLC

Jason M. Gunther, P.E.

Branch Manager

McMAHON
TRANSPORTATION ENGINEERS & PLANNERS

McMAHON ASSOCIATES, INC.
5500 Village Blvd | Suite 103 | West Palm Beach, FL 33407
p 561-840-8650 | f 561-840-8590
mcmahonassociates.com

PRINCIPALS
Joseph W. McMahon, P.E.
Joseph J. DeSantis, P.E., PTOE
John S. DePalma
William T. Steffens
Casey A. Moore, P.E.
Gary R. McNaughton, P.E., PTOE

ASSOCIATES
John J. Mitchell, P.E.
Christopher J. Williams, P.E.
R. Trent Ebersole, P.E.
Matthew M. Kozsuch, P.E.
Maureen Chlebek, P.E., PTOE

October 5, 2015

VIA E-MAIL

Mr. Hal R. Dodt, Director, Real Estate Florida
Equitas Management Group
5332 SW Orchid Bay Drive, Suite 200
Palm City, FL 34990

RE: Family Dollar Blue Heron Boulevard Traffic Analysis
McMahon Project No. M15578.01

Dear Mr. Dodt:

McMahon Associates, Inc. (McMahon) has completed a transportation engineering analysis associated with the development of a parcel located on the southwest corner of Blue Heron Boulevard and Avenue L, in the City of Riviera Beach. The proposed development, with an anticipated buildout year of 2017, will include an 8,000 square foot Family Dollar and 6,200 square feet of medical office space.

Trip Generation Analysis

Using information obtained from Palm Beach County and the Institute of Transportation Engineers (ITE), *Trip Generation Manual*, 9th Edition, trip generation estimates were developed for the proposed uses. **Table 1** summarizes the daily, AM peak hour and PM peak hour trips. Results of the analysis indicate that the proposed development is expected to generate 736 total daily trips, 45 total AM peak hour trips and 79 total PM peak hour trips. Pass-by reductions were based on information obtained from Palm Beach County. After accounting for pass-by traffic, the project is expected to generate 397 net new daily trips, 24 net new AM peak hour trips and 43 net new PM peak hour trips. Excerpts from ITE are attached in **Appendix A**.

Site Access

Access to the site is being proposed via a right-in/right-out driveway connection to Blue Heron Boulevard and a full access connection to Avenue L.

Project Distribution

The distribution of project traffic onto the surrounding roadway network, graphically shown on **Figure 1**, was based on the characteristics of the roadways adjacent to the project site, as well as existing travel patterns and land uses surrounding the project site. The project assignment, shown on Figure 1, was based on the trip generation and project distribution analyses. Based on the projected volumes at the proposed driveway connections, exclusive turn lanes are not required to access the project site at either driveway.

TABLE 1
TRIP GENERATION ANALYSIS
FAMILY DOLLAR BLUE HERON BOULEVARD TRAFFIC ANALYSIS

DAILY

LAND USE	ITE CODE	INTENSITY		TRIP GENERATION RATE [1]	IN	OUT	TOTAL TRIPS			PASS-BY[1]		NEW TRIPS		
							IN	OUT	TOTAL			IN	OUT	TOTAL
Family Dollar	814	8,000	SF	T = 64.03 (X)	50%	50%	256	256	512	317	62.00%	97	98	195
Medical Office	720	6,200	SF	T = 36.13 (X)	50%	50%	112	112	224	22	10.00%	101	101	202
TOTAL							368	368	736	339		198	199	397

AM PEAK HOUR

LAND USE	ITE CODE	INTENSITY		TRIP GENERATION RATE [1]	IN	OUT	TOTAL TRIPS			PASS-BY[1]		NEW TRIPS		
							IN	OUT	TOTAL			IN	OUT	TOTAL
Family Dollar	814	8,000	SF	T = 3.81 (X)	50%	50%	15	15	30	19	62.00%	6	5	11
Medical Office	720	6,200	SF	T = 2.39 (X)	79%	21%	12	3	15	2	10.00%	11	2	13
TOTAL							27	18	45	21		17	7	24

PM PEAK HOUR

LAND USE	ITE CODE	INTENSITY		TRIP GENERATION RATE [1]	IN	OUT	TOTAL TRIPS			PASS-BY[1]		NEW TRIPS		
							IN	OUT	TOTAL			IN	OUT	TOTAL
Family Dollar	814	8,000	SF	T = 6.82 (X)	50%	50%	28	27	55	34	62.00%	11	10	21
Medical Office	720	6,200	SF	Ln(T) = 0.90 Ln(X)+ 1.53	28%	72%	7	17	24	2	10.00%	5	17	22
TOTAL							35	44	79	36		16	27	43

Notes:

(1) Palm Beach County Trip Generation Rates, August 13, 2014 used for Medical office. ITE Trip Generation Manual, 9th Edition used for Family Dollar trip rate. Pass-by rate for Family Dollar based on Palm Beach County information.

McMAHON TRANSPORTATION ENGINEERS & PLANNERS

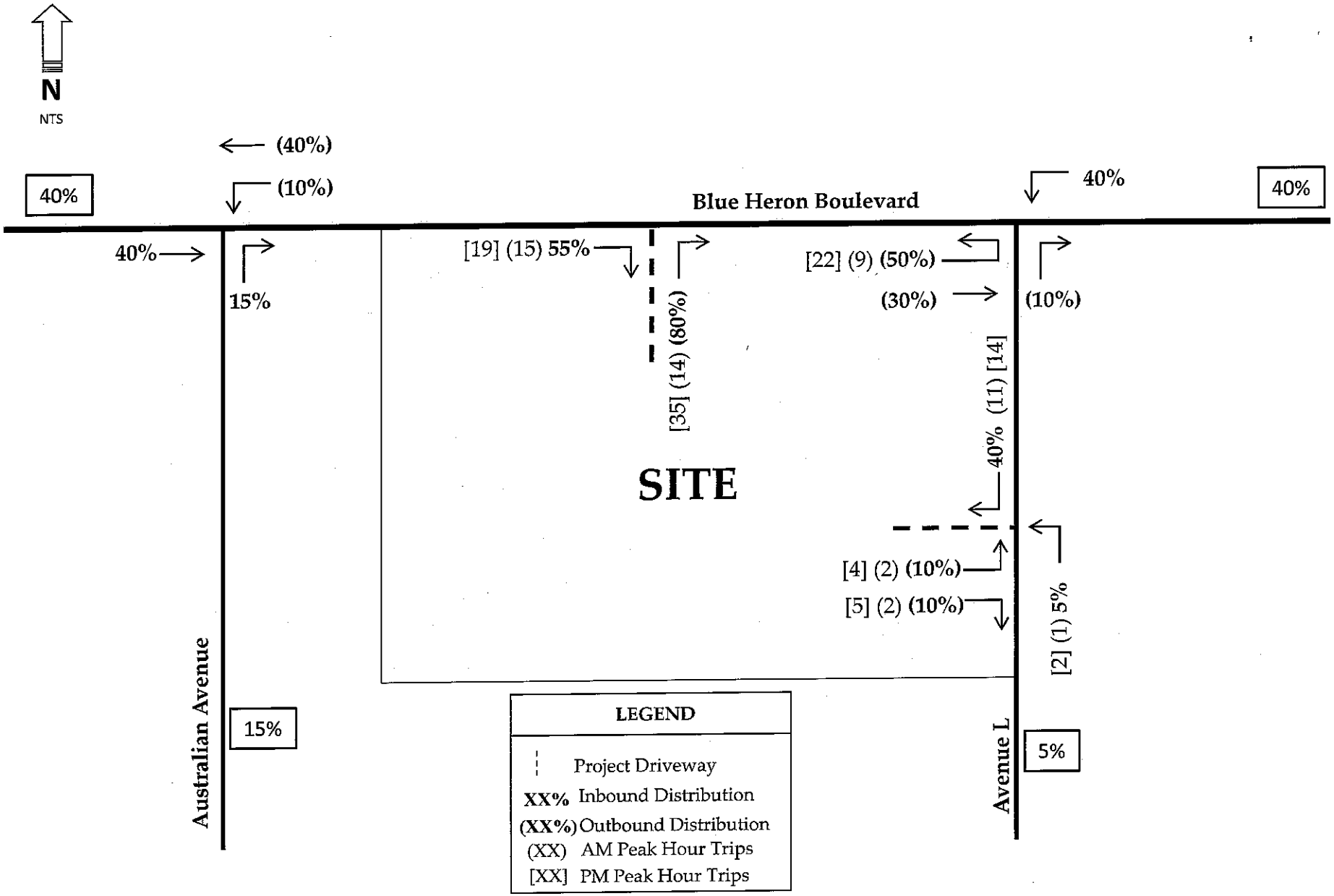

Figure 1
Project Distribution
Family Dollar Blue Heron Boulevard Traffic Analysis
Riviera Beach, Florida

McMAHON
TRANSPORTATION ENGINEERS & PLANNERS

Should you have any questions or comments regarding these findings, please do not hesitate to call me.

Sincerely,

9/2/16

Natalia Thais Lercari, P.E.
Professional Engineer
License No. 68205
State of Florida, Board of Professional Engineers
Certificate of Authorization No. 4908

NTL/amp
Enclosure

F:\FL\15578M_EQUITAS_FamilyDollarBlueHeron\15578M_01\Admin\LtrHD100515.doc

APPENDIX A

TRIP GENERATION RATES

Palm Beach County Trip Generation Rates

Cat	Landuse	ITE Code	Unit	Daily Rate/Equation	Pass-By %	AM Peak Hour In/Out	AM Peak Hour Rate/Equation	PM Peak Hour In/Out	PM Peak Hour Rate/Equation
Industrial	Light Industrial	110	1000 S.F.	6.97	10%	88/12	0.92	12/88	0.97
	Warehouse	150	1000 S.F.	3.56	10%	79/21	0.30	25/75	0.32
	Flex Space - IND FLU	PBC	1000 S.F.	7.86	10%	64/36	1.53	40/60	1.21
	Flex Space - COM FLU	PBC	1000 S.F.	29.67	45%	72/28	2.12	40/60	2.67
	Mini-Warehouse/SS	151	1000 S.F.	2.50	10%	55/45	0.14	50/50	0.26
Residential	Single Family Detached	210	Dwelling Unit	10	0%	25/75	0.75	63/37	Ln(T) = 0.90 Ln(X) + 0.51
	Apartment	220	Dwelling Unit	6.65	0%	20/80	T = 0.49(X) + 3.73	65/35	0.62
	Condo/TH (Fee Simple)	230	Dwelling Unit	6.65	0%	17/83	Ln(T) = 0.80 Ln(X) + 0.26	67/33	Ln(T) = 0.82 Ln(X) + 0.32
	55+ SF Detached	251	Dwelling Unit	3.68	0%	35/65	0.22	61/39	0.27
	55+ SF Attached	252	Dwelling Unit	3.44	0%	34/66	0.2	54/46	0.25
	Congregate Care Facility	253	Dwelling Unit	2.02	0%	59/41	0.06	55/45	0.17
	Assisted Living Facility	254	Beds	2.66	0%	65/35	0.14	44/56	0.22
Ldg	Hotel	310	Rooms	8.17	10%	59/41	0.53	51/49	0.6
Rec	Movie Theater	444	Seats	1.8	5%	N/A	0	60/40	0.144
	Health Club	492	1000 S.F.	32.93	5%	50/50	1.41	57/43	3.53
Institutional	Elementary School	520	Students	1.29	0%	55/45	0.45	49/51	0.15
	Middle/Junior School	522	Students	1.62	0%	55/45	0.54	49/51	0.16
	High School	530	Students	1.71	0%	68/32	0.42	47/53	0.13
	Private School (K-8)	534	Students	Use Private K-12 rate	0%	55/45	0.90	47/53	0.19
	Private School (K-12)	536	Students	2.48	0%	61/39	0.81	43/57	0.17
	Church/Synagogue[a]	560	1000 S.F.	9.11	5%	62/38	0.56	48/52	0.55
	Day Care	565	1000 S.F.	74.06	50%	53/47	12.18	47/53	12.34
	Library	590	1000 S.F.	56.24	10%	71/29	1.04	48/52	7.30
Med	Hospital	610	1000 S.F.	13.22	10%	63/37	0.95	38/62	0.93
	Nursing Home	620	beds	2.74	10%	69/31	0.17	33/67	0.22
Office	General Office	710	1000 S.F.	Ln(T) = 0.76 Ln(X) + 3.68	10%	88/12	Ln(T) = 0.80 Ln(X) + 1.57	17/83	1.49
	* Medical Office	720	1000 S.F.	36.13	10%	79/21	2.39	28/72	Ln(T) = 0.90 Ln(X) + 1.53
	Medical Office (Reduced)[b]	PBC	1000 S.F.	18.07	10%	79/21	1.2	27/73	T = 1/2 Med. Office PM
	Government Office	730	1000 S.F.	68.93	10%	84/16	1.16	31/69	1.21

Trip rates taken mostly from ITE Trip Generation Manual, 9th Edition except as noted.

August 13, 2014

F:\TRAFFIC\Development Review\Trip Generation\Trip Generation Rates for Web 8-13-2014

Palm Beach County Trip Generation Rates

Cat.	Landuse	ITE Code	Unit	Daily Rate/Equation	Pass-By %	AM Peak Hour In/Out	AM Peak Hour Rate/Equation	PM Peak Hour In/Out	PM Peak Hour Rate/Equation
Retail	Nursery (Wholesale)	818	acre	4.50	0%	N/A	0.26	N/A	0.45
	Gen. Commercial	820	1000 S.F.	Ln(T) = .65 Ln(X) + 5.83[a]	Note d	62/38	0.96	48/52	Ln(T) = 0.67 Ln(X) + 3.31[a]
	New Car Sales	841	1000 S.F.	32.30	15%	75/25	1.92	40/60	2.62
	Tire Store	848	1000 S.F.	24.87	28%	63/37	2.89	43/57	4.15
	Pharmacy + DT	881	1000 S.F.	96.91	50%	52/48	3.45	50/50	9.91
Services	Drive-In Bank[f]	912	1000 S.F.	148.15	47%	57/43	12.08	50/50	24.3
	Quality Restaurant	931	1000 S.F.	89.95	44%	50/50	0.81	67/33	7.49
	High Turnover Sit-Down Rest.	932	1000 S.F.	127.15	43%	55/45	10.81	60/40	9.85
	Fast Food Restaurant w/o DT	933	1000 S.F.	396.90	45%	60/40	43.87	51/49	26.15
	Fast Food Restaurant + DT	934	1000 S.F.	496.12	49%	51/49	45.42	52/48	32.65
	Gas Station	944	Fuel Positions	168.56	50%	50/50	12.16	50/50	13.87
	Convenience Store	851	1000 S.F.	737.99	61%	50/50	67.03	51/49	52.41
	Carwash (Automated)[g]	PBC	Lane	166.00	0%	50/50	11.97	50/50	13.65

Footnotes: a) Weekend peak hour rate = 12.04 per 1,000 s.f. with a 49/51 directional split
b) To be used only when adjacent to hospital, for Med. Office square footage not to exceed 44% of the hospital square footage
c) For intensities under 10,000 s.f., use a rate of 152.03 / 1,000 SF instead of the equation.
d) Pass-by percent = 62% for 10,000 sf or less, otherwise = 83.18 - 9.30 * Ln(A) where A is 1,000 s.f. of leasable area
e) For densities under 10,000 s.f., use a rate of 12.81 / 1,000 sf instead of the equation.
f) Use these rates for a drive-in bank with up to 4 drive-thru lanes (excl. ATM lane). For additional drive-thru lanes, use per lane rates from ITE Code 912 (139.25 daily, 9.29 AM, 33.24 PM. Use same in/out splits)
g) Daily rate taken from PBC trip gen. study. Peak hour rates derived by applying peak to daily ratios for gas station to daily carwash rate

Trip rates taken mostly from ITE Trip Generation Manual, 9th Edition except as noted.

Variety Store
(814)

Average Vehicle Trip Ends vs: 1000 Sq. Feet Gross Floor Area
On a: Weekday

Number of Studies: 15
Average 1000 Sq. Feet GFA: 10
Directional Distribution: 50% entering, 50% exiting

Trip Generation per 1000 Sq. Feet Gross Floor Area

Average Rate	Range of Rates	Standard Deviation
64.03	33.73 - 133.60	25.69

Data Plot and Equation

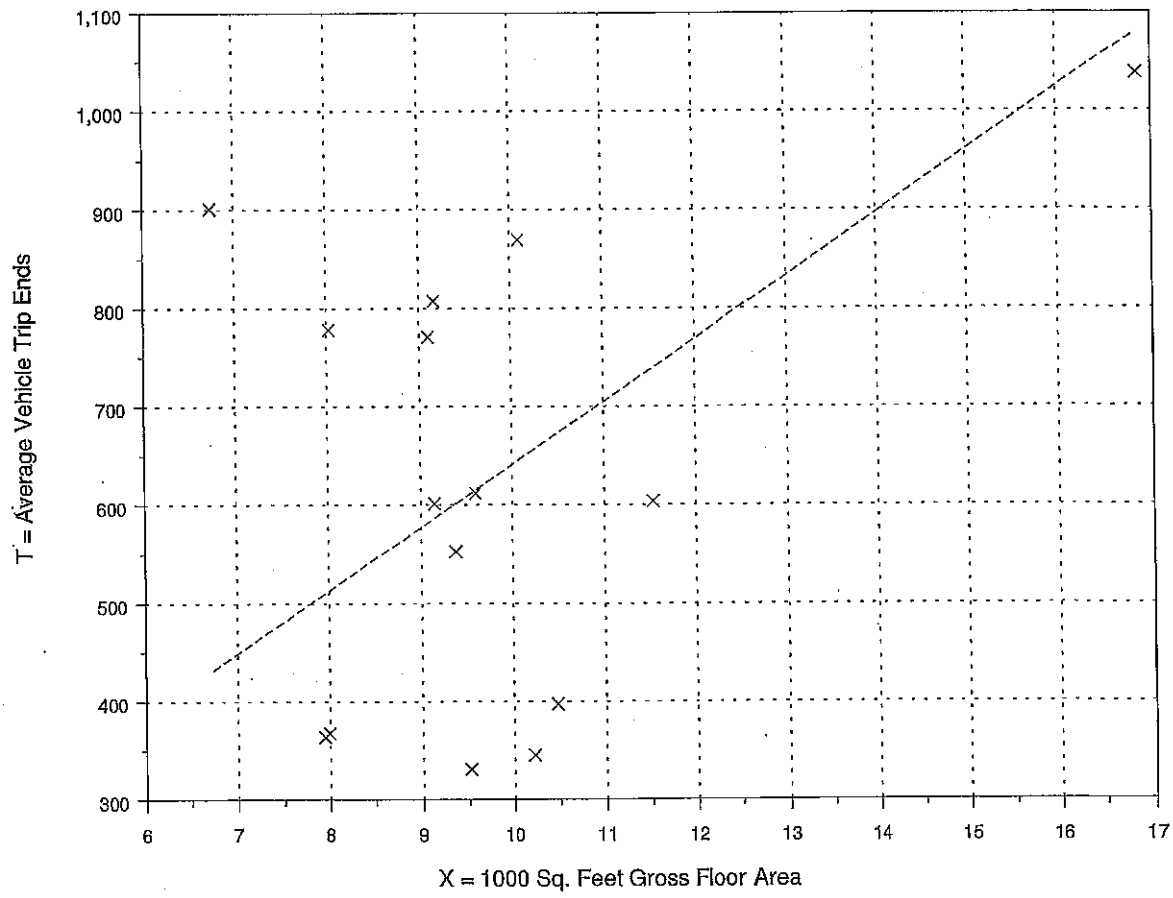

× Actual Data Points

------ Average Rate

Fitted Curve Equation: Not given

R^2 = ****

Variety Store
(814)

Average Vehicle Trip Ends vs: 1000 Sq. Feet Gross Floor Area
On a: Weekday,
Peak Hour of Adjacent Street Traffic,
One Hour Between 7 and 9 a.m.

Number of Studies: 15
Average 1000 Sq. Feet GFA: 10
Directional Distribution: Not available

Trip Generation per 1000 Sq. Feet Gross Floor Area

Average Rate	Range of Rates	Standard Deviation
3.81	1.68 - 11.86	2.74

Data Plot and Equation

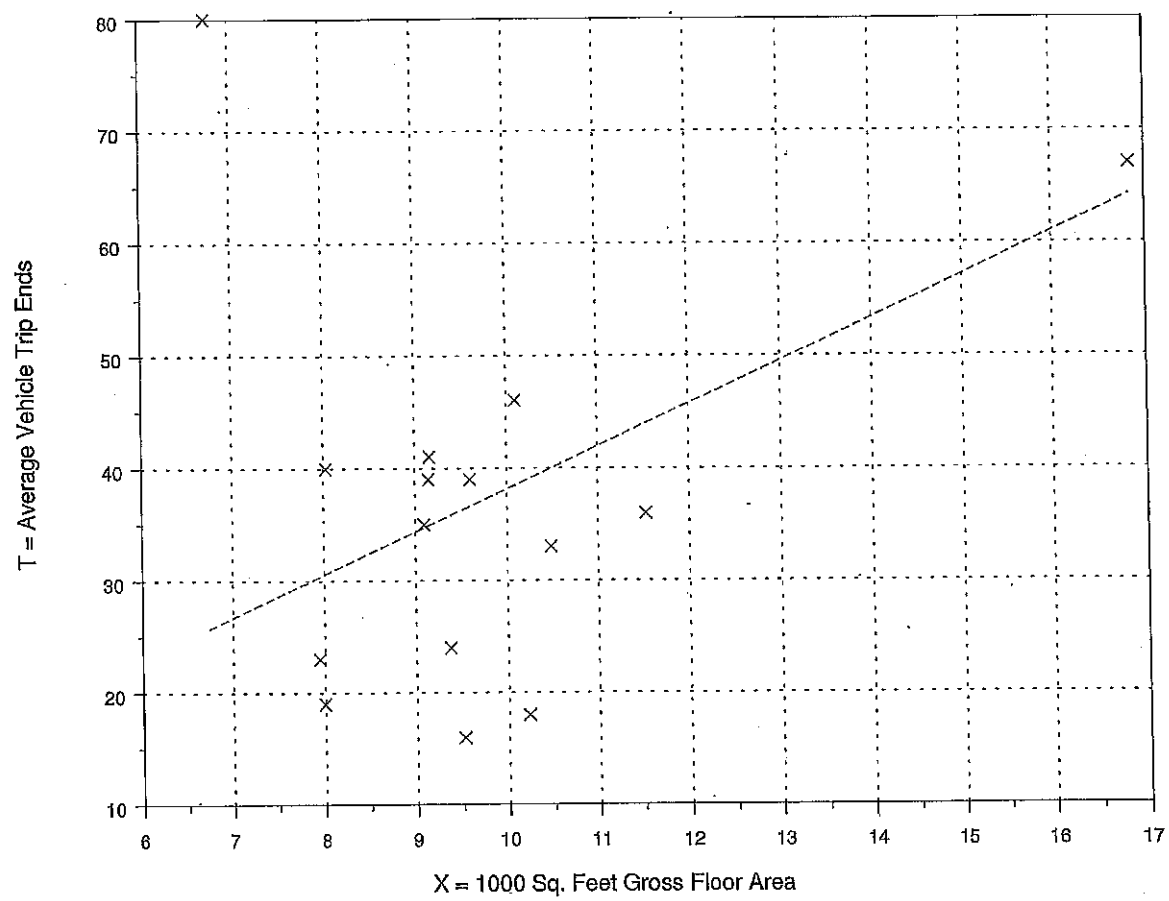

× Actual Data Points

------ Average Rate

Fitted Curve Equation: Not given

R^2 = ****

Variety Store
(814)

Average Vehicle Trip Ends vs: 1000 Sq. Feet Gross Floor Area
On a: Weekday,
Peak Hour of Adjacent Street Traffic,
One Hour Between 4 and 6 p.m.

Number of Studies: 15
Average 1000 Sq. Feet GFA: 10
Directional Distribution: Not available

Trip Generation per 1000 Sq. Feet Gross Floor Area

Average Rate	Range of Rates	Standard Deviation
6.82	3.15 - 13.94	3.80

Data Plot and Equation

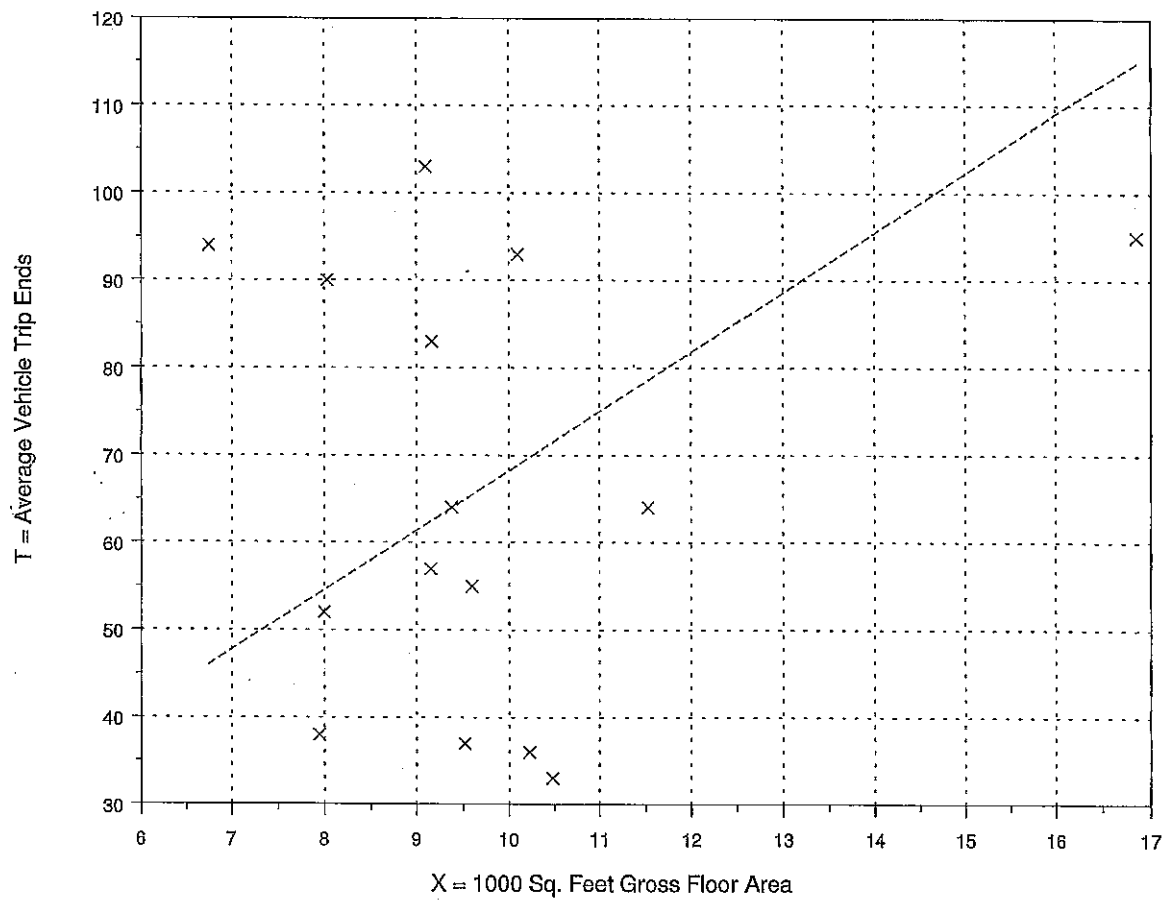

Fitted Curve Equation: Not given

R^2 = ****

CITY OF RIVIERA BEACH

OFFICE OF
COMMUNITY DEVELOPMENT

DEPARTMENT OF COMMUNITY DEVELOPMENT
600 WEST BLUE HERON BLVD. • RIVIERA BEACH, FLORIDA 33404
(561) 845-4060 FAX: (561) 845-4038

October 19, 2016

Jason M Gunther, P.E.
Thomas Engineering Group
125 W. Indiantown Road, Suite 206
Jupiter, Florida 33458

RE: West Blue Heron and Avenue L Retail Store Site Plan (SP-16-16)
PCN: 56-43-42-28-31-015-0010

Dear Mr. Gunther,

The intent of this letter is to inform you that City staff has completed departmental review for the West Blue Heron Boulevard and Avenue L Retail Store Site Plan Application (SP-16-16). The City is responding to the SP-16-16 application with the following comments:

Building Department – see attached comments.

Engineering/Public Works Department – see attached comments.

Police Department – see attached comments.

Code Enforcement Department – see attached comments.

Fire Department – see attached comments.

Utility District Department – see attached comments.

Planning and Zoning Department

1. Place proposed handicap parking stalls closer to the main entrance.
2. Per Section 31-576(a), remove the proposed 2 foot overhang on the parking spaces on the northern, western and southern portions of the property and replace with 9x19 parking stalls. Add a wheel stop placed 2½ feet from the edge of all of the proposed parking stalls.
3. Provide a 10 feet by 30 feet easement onsite for a Palm Tran Bus Shelter.
4. Provide the estimated number of jobs, general job titles, and anticipated salary range for each position for the projected retail store. Provide the estimated tax value for the development for both pre-construction and post construction values.
5. Add dimensions on the proposed elevations.

6. Provide a site photometric plan for the proposed development.
7. Provide a detail for the proposed trash enclosure. Per Section 31-600(o), an opaque, minimum six-foot high masonry wall or fence shall screen the storage area for all trash receptacles, including dumpsters.
8. Per Section 31-600(t), the base of each permitted freestanding sign shall be surrounded by a five foot plant bed around the perimeter of the sign. This five foot area shall be planted with low-growing plant material in a manner that will present a full and finished appearance within a six month period from planting. Add the 5 foot landscape bed around the perimeter of the proposed monument sign to comply with regulations.
9. Per Section 31-610(b), a landscaped strip of land not less than five feet in width shall be located between the parking area and the abutting private property. Add a 5 foot landscape buffer on the western portion of the property to comply with regulations. Add the required landscaping in the referenced 5 foot landscape buffer to comply with Section 31-610(b)(2).
10. Per Section 31-605(b)(2), add a note on the Landscaping Plan that requires all tree stakes and braces to remain onsite and attached for a minimum of 12 months.
11. Per Section 31-610(a)(2), the landscaping provided within the landscaped strip shall include:
    a. One tree for every 20 linear feet of required landscape strip planted singly or in clusters, not to be more than 50 feet apart when utilizing clustering techniques, located between the property line and the parking area;
    b. A hedge, wall, berm or other durable landscape barrier of not less than 24 inches or three gallon containers at installation placed along the outside perimeter of the landscaped strip;
    c. Other landscaping, such as shrubs or vines, planted three feet on-center or as appropriate to create reasonable coverage within six months after planting, along the street side of a wall; and
    d. Grass, ground cover, or other landscape treatment and mulch.

    Provide a tree every 20 linear feet as well as required reference landscaping along the northern portion (Blue Heron Boulevard) of the proposed development within the property lines to comply with regulations.
12. Provide approval from the Florida Department of Transportation for the proposed driveway entrance along Blue Heron Boulevard.
13. Provide a letter of agreement for shared access between the proposed site and adjacent property to the west.
14. Sheets C-02, C-03, C-08, C-09, C-11, C-12 were referenced in the Sheet Index on the cover sheet but missing from the submittal package. Also, the Landscape Plans, Elevations, and Floor Plan submitted with the site plan application needs to be referenced on the Sheet Index on the cover sheet.
15. Add 2 of the proposed Bahaman Louvers with the proposed LED down lights on the southern elevation.
16. For the doors at the eastern and southern elevations, have the doors open inward versus outwards for security reasons.
17. Replace the text "Future Medical Office" on the proposed site plan with "Future Commercial Office/Retail Space".

18. On the Paving, Grading, and Drainage Plan, add an ADA ramp with detectable surface per FDOT Index #304 to the northern section of the proposed 5 foot sidewalk at the entrance on Avenue L.
19. Add instructional signs (eg. Entrance, Exit, or similar) at the entrance along Avenue L. Per Section 28-113, instructional signs shall be exempt from the limitation on total sign area allowed per business and the requirement of 24 feet of setback from any common property line, but shall be at least five feet from any common property line. However, an instructional sign shall not be more than 3½ feet in height, nor total more than five square feet in area.
20. On Sheet C-05, remove the overlying text under the Location Map above the Future Land Use text.
21. The City has a 15 foot right-of-way easement along Blue Heron Boulevard from Australian Avenue to Avenue L (enclosed in this document) in which there's parking proposed in the right-of-way and there's an existing 30 inch waterline within the right-of-way. Since the right-of-way easement is forever and there's an active clean water line underneath, identify an alternative solution of having the proposed onsite parking in an area that will not be directly on top of the water line.

Please respond to the above comments in writing and submit the revised documents as necessary. It is important to note that a detailed narrative addressing each comment must be included when submitting the revised documents. Any revisions submitted without a detailed narrative shall be returned to the applicant without any further processing by the City.

Please feel free to contact me at (561) 845-3427 or by email at dspradley@rivierabch.com should you have any questions or concerns.

Sincerely,

DeAndrae Spradley
Principal Planner

Cc: Danny Jones, Interim City Manager
Jeff Gagnon, Assistant Director of Community Development

56-43-42-28-31-015-0010

RIGHT-OF-WAY AGREEMENT

PARCEL 4

KNOW ALL MEN BY THESE PRESENTS that **FLORIDA EAST COAST RAILWAY COMPANY, a Florida corporation,**

Whose address is **King and Malaga Streets, St. Augustine, Fla. 32084**

hereinafter called the GRANTOR, in consideration of the sum of One Dollar ($1.00) and other good and valuable considerations, receipt of which is hereby acknowledged, do hereby grant and convey to the City of Riviera Beach, A Municipal Corporation of the State of Florida and located in Palm Beach County, and to its successors and assigns, hereinafter called the GRANTEE, an easement forever for a right-of-way fifteen (15) feet in width across certain lands of the GRANTOR situated in the County of Palm Beach and State of Florida, more particularly described as follows: The North 15 feet of Lots 1 through 7, Block 0, Replat of LEWIS TERMINALS PLAT NO. 1, as recorded in Plat Book 27, pages 39, 40 and 41, Public Records of Palm Beach County, Florida. Containing 8013.3 sq. ft., more or less.

The conditions of this easement are such that:

(1) The GRANTEE always shall have the right to enter upon the said strip of land for the purposes of constructing, reconstructing, inspecting, operating and maintaining buried pipelines and all appurtenances necessary thereto and used for the conveyance of water and wastewater, together with all other rights and privileges necessary or convenient for the full enjoyment and use for the stated purpose, including the right to remove trees, undergrowth, or other obstructions, which, in the opinion of the GRANTEE, may interfere with such use.

(2) The GRANTEE shall not continuously maintain the appearance or condition of the surface of the easement area; however,

This is not a certified copy

80 183773
1980 OCT 20 AM 9:46
B360
PREPARED BY:
ALLAN V. EVERARD, ATT'Y
P. O. BOX 9035
RIVIERA BEACH, FLA. 33404
B3387 P0509

after any construction or other activity performed or instigated by the GRANTEE, which disturbs the surface, the GRANTEE shall cause the surface to be graded to its prior elevation and contour, and otherwise restored to its general condition and appearance prior to such activity.

(3) The GRANTOR reserves and shall have the right and privilege to use the subject strip of land for all purposes, except as herein granted or as might interfere with the GRANTEE'S stated use.

IN WITNESS WHEREOF, the GRANTOR (S) have hereunto affixed their hands and seals this 2nd day of July, 1980.

Signed, sealed and delivered in the presence of:

B. D. Ellis
M. B. Sutch

FLORIDA EAST COAST RAILWAY COMPANY

By: W. C. Norton (SEAL)
President

(SEAL)

Attest: Susan M. Furner (SEAL)
Assistant Secretary

This is not a certified copy

B3387 P0510

APPROVED

FORM	EXECUTION
6/30/80	7/2/80

STATE OF FLORIDA
COUNTY OF St. Johns

I HEREBY CERTIFY that on this day, before me, an officer duly authorized in the State and County aforesaid to tak acknowledgements, personally appeared W. L. Thornton, well known to me to be the President of the Corporation named as GRANTOR in the foregoing Agreement, and that he acknowledged executing the same in the presence of two subscribing witnesses freely and voluntarily under authority duly vested in him by said corporation and that the seal affixed thereto is the true corporate seal of said corporation.

WITNESS my hand and official seal this 2nd day of July, 1980.

Rebecca Ashton
Notary Public, State of Florida at Large

My Commission expires: April 5, 1982

This is not a certified copy

B3387 P0511

B3387 P0512

BLOCK 3

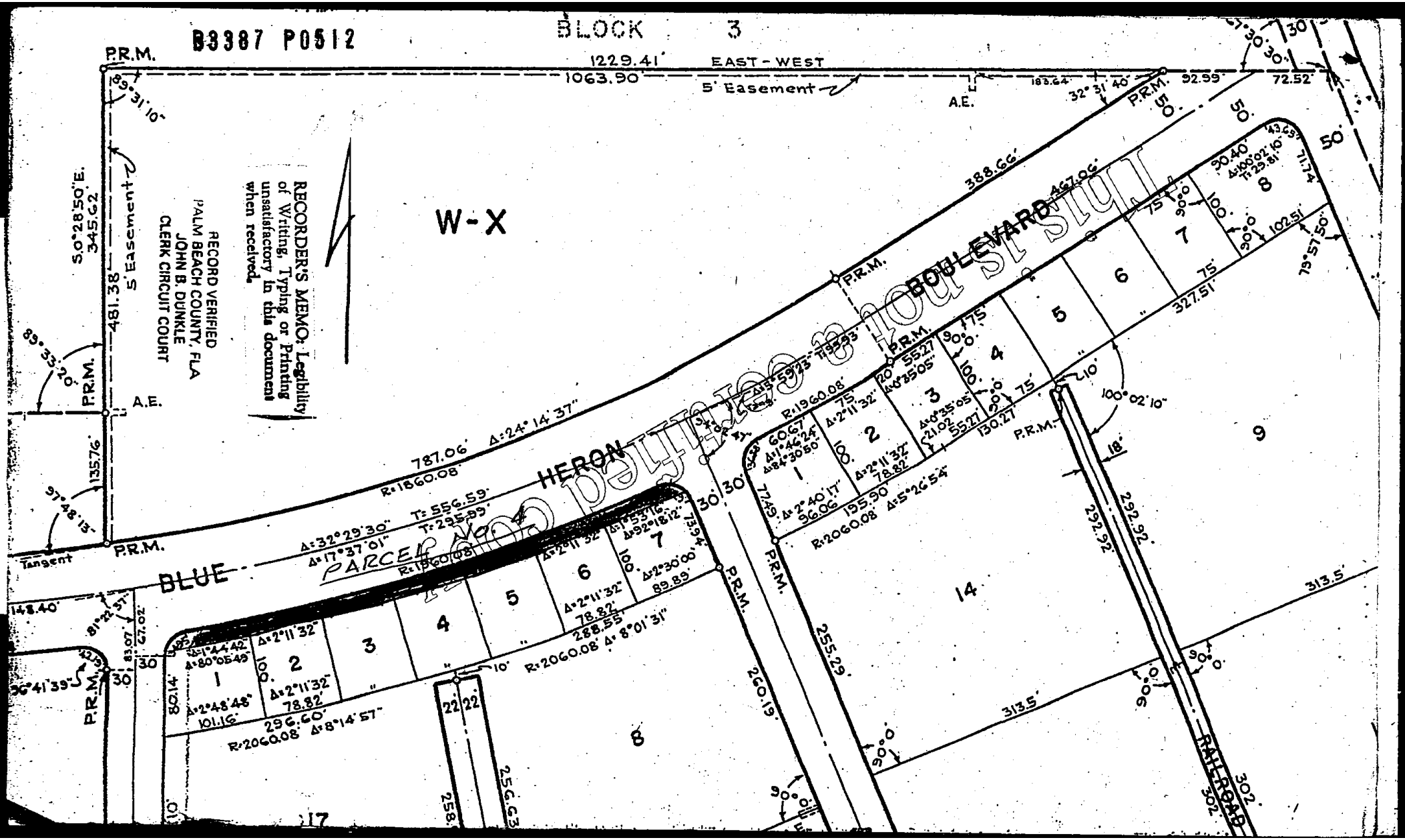

CITY OF RIVIERA BEACH • P. O. Drawer 10682 • RIVIERA BEACH, FLORIDA 33419
DEPARTMENT OF PUBLIC WORKS INTER-DEPARTMENTAL COMMUNICATION
Tel. (561) 845-4080 **Fax (561) 840-4845**

TO: DeAndrae L. Spradley, Principal Planner
FROM: Terrence N. Bailey, PE
DATE: 10/13/16
RE: Blue Heron/Ave L Retail Site Plan Review– SP-16-16 Review

==========

Engineering Division offer the following comments:

General Comment:

- The proposed parcel line creation will require a plat for the project. Please submit the plat in the resubmittal.
- Provide a master site plan for the full buildout condition of the entire site as well as the proposed phase I.
- The parcel line is proposed along the centerline of the driveway access to Blue Heron. Please consider placing the entrance entirely into one parcel.
- The parking at the southwest corner of phase I, please consider making this pervious as well for consistency. In addition, the proposed lot line is 2' from the face of curb, this will mean there is no setback from this property line and no landscape buffer along this property line.
- The City will require a 10'x30' palmtran easement approximately 100' east of the Australian intersection.
- The open cut along Avenue L will require a 50' mill and overlay extended from the edges of the cut.
- Please provide conceptual water, sewer, and drainage for the entire master plan buildout. How will water and sewer service be provided to the future building.
- Please provide color renderings of the building.
- The drainage statement provided will not be sufficient for site plan review. Please provide full site drainage calculations for both the full buildout and the phase I portion of the development. In addition, please provide a copy of any geotechnical investigation that has been done for the project.
- Please provide a cross-section along the southern property line to demonstrate runoff from the site will be confined onsite with grading or a defined perimeter berm.
- On sheet C7, please depict the valley gutter proposed across the driveway. In addition, add a weir in structure No.5 and add a new structure in the valley gutter to provide a defined outfall point into the City Right of Way.

- The provided traffic study is for 8,000sf retail and 6,200sf medical, but the site plan proposed is for 8,247sf retail and 7,780 medical. Please update the traffic analysis.
- In the traffic study provided, it appears that 50% (368 trips) of the outbound trips will be making a U-turn at the Dixie Highway intersection.
- Please provide a copy of the Palm Beach County traffic concurrency letter for this project.

Terrence N. Bailey, P.E.
City Engineer

MEMORANDUM

To: **DeAndrae Spradley, Principal Planner**

From: **Leighton Walker, Utilities Engineer**

Date: **October 18, 2016**

Re: **Family Dollar Site Plan (SP-16-16) Review Ave L & Blue Heron**

Utility District **Disapproves** the site plan based on the following comments:

1. City of Riviera Beach Utility District (CRBUD) records indicate that there is a 30" raw water (RW) main within the 15' easement shown on the utility plan sheet C-10 and 8" and12" WM within the Blue Heron Boulevard right-of-way (ROW) [See attached GIS Map]. Verify the existence and location of these water lines and update the plans accordingly.

2. No construction of parking spaces within the easement for the CRBUD's easement for the 30" raw water main shall be allowed.

3. No taps shall be allowed on the CRBUD's RW main.

4. All water in private WM's feeding the property shall be metered. Additionally, water used for file lines, potable water services and irrigation services shall have appropriate backflow prevention devices installed.

5. Show conceptually or explain how irrigation water will be provided for landscaping.

6. To avoid the risk of brakeage associated with disturbances associated with tapping into and performing construction around the 8" asbestos-concrete WM along the frontage of the property, the owner/developer shall be required to upgrade the WM to ductile iron pipe.

7. In order to facilitate the proposed sanitary lateral tie-into the main, a segment of the sewer main clay pipe (to be field determined) shall be replaced with PVC (C900).

LCW

Printed on Monday, September 26, 2016, 1:34 PM by Shirley Gomez
R:\EQUITAS\FJ150025 - BLUE HERON & AVENUE L, RIVIERA BEACH\DWG\SITE PLAN ENTITLEMENTS\FJ150025-WSU PLAN----->LAYOUT: C-10 UTLITY PLAN

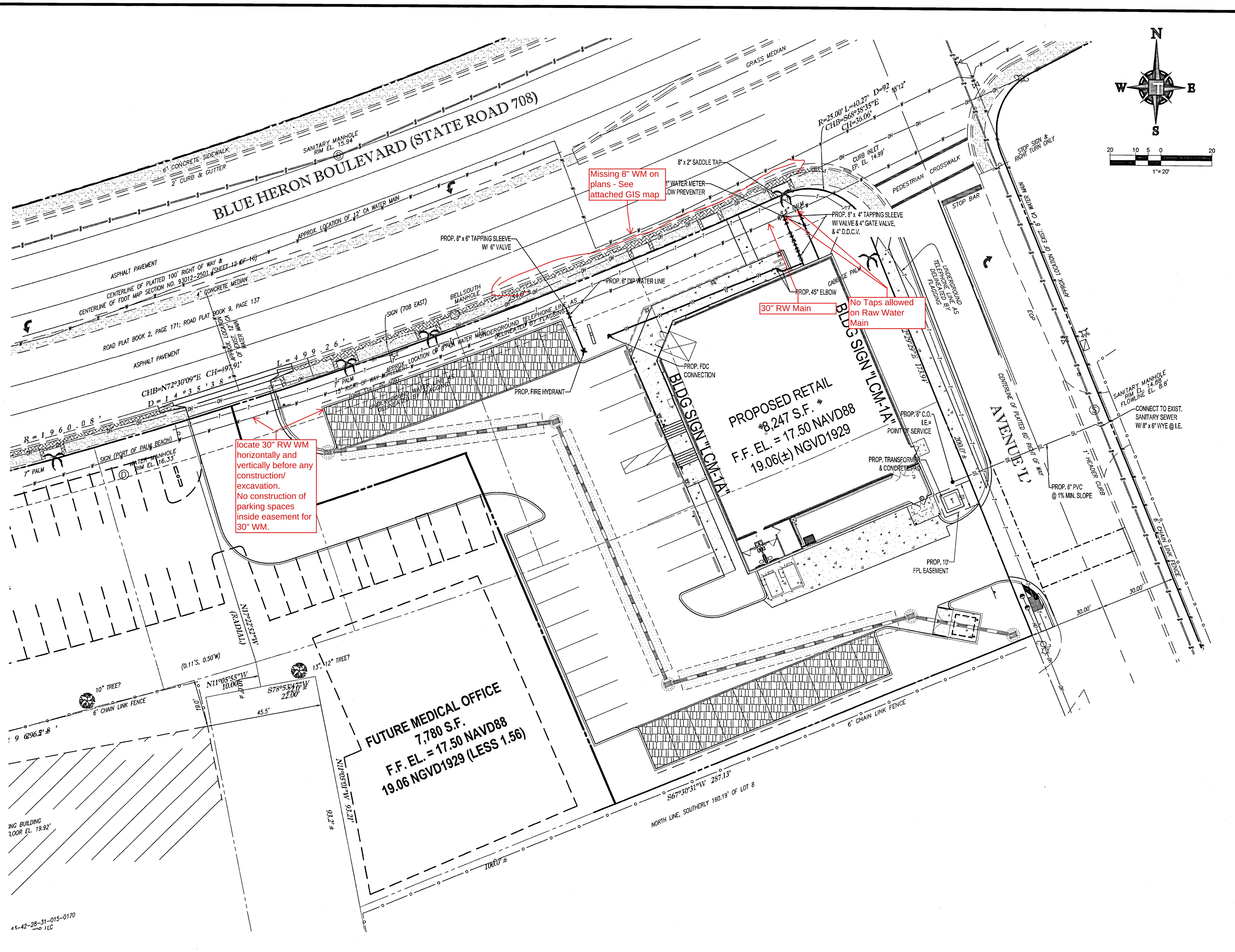

UTILITY NOTES:

1. CONTRACTOR IS RESPONSIBLE FOR VERIFYING ALL UTILITIES AND NOTIFYING THE APPROPRIATE UTILITY COMPANY PRIOR TO BEGINNING CONSTRUCTION.
2. THE LOCATION AND/OR ELEVATION OF EXISTING UTILITIES AS SHOWN ON THESE PLANS IS BASED ON RECORDS OF THE VARIOUS UTILITY COMPANIES AND, WHERE POSSIBLE, MEASUREMENTS TAKEN IN THE FIELD. THE INFORMATION IS NOT TO BE RELIED ON AS BEING EXACT OR COMPLETE. THE CONTRACTOR MUST CALL THE APPROPRIATE UTILITY COMPANY AT LEAST 48 HOURS BEFORE ANY EXCAVATION TO REQUEST EXACT FIELD LOCATION OF THE UTILITIES. IT SHALL BE THE RESPONSIBILITY OF THE CONTRACTOR TO RELOCATE ALL EXISTING UTILITIES WHICH CONFLICT WITH THE PROPOSED IMPROVEMENTS SHOWN ON THE PLANS.
3. CONTRACTOR SHALL VERIFY HORIZONTAL AND VERTICAL LOCATION OF ALL EXISTING STORM SEWER STRUCTURES, PIPES, AND ALL UTILITIES PRIOR TO CONSTRUCTION.
4. CONTRACTOR IS RESPONSIBLE FOR REPAIRS OF DAMAGE TO ANY EXISTING IMPROVEMENTS DURING CONSTRUCTION, SUCH AS, BUT NOT LIMITED TO, UTILITIES, PAVEMENT, STRIPING, CURBS, ETC. REPAIRS SHALL BE EQUAL TO OR BETTER THAN EXISTING CONDITIONS.
5. CONTRACTOR SHALL REFER TO ARCHITECTS PLANS AND SPECIFICATIONS FOR ACTUAL LOCATION OF ALL UTILITY ENTRANCES. CONTRACTOR SHALL COORDINATE INSTALLATION OF UTILITIES IN SUCH A MANNER AS TO AVOID CONFLICTS AND ASSURE PROPER DEPTHS ARE ACHIEVED AS WELL AS COORDINATING WITH CITY UTILITY REQUIREMENTS AS TO LOCATIONS AND SCHEDULING FOR TIE-INS/CONNECTIONS PRIOR TO CONNECTING EXISTING FACILITIES.
6. CONTRACTOR SHALL COORDINATE WITH ARCHITECTURAL PLANS, POWER COMPANY, & TELEPHONE COMPANY FOR ACTUAL ROUTING OF POWER AND TELEPHONE SERVICE TO BUILDING.
7. SEE DETAIL SHEETS FOR BACKFILLING AND COMPACTION REQUIREMENTS ON UTILITY TRENCHES.
8. CONTRACTOR SHALL COMPLY TO THE FULLEST EXTENT WITH THE LATEST STANDARD OF OSHA DIRECTIVES OR ANY OTHER AGENCY HAVING JURISDICTION FOR EXCAVATION AND TRENCHING PROCEDURES. THE CONTRACTOR SHALL USE SUPPORT SYSTEMS, SLOPING, BENCHING, AND OTHER MEANS OF PROTECTION. THIS TO INCLUDE BUT NOT LIMITED TO, ACCESS AND EGRESS FROM ALL EXCAVATION AND TRENCHING. CONTRACTOR IS RESPONSIBLE TO COMPLY WITH PERFORMANCE CRITERIA FOR OSHA.
9. CONTRACTOR SHALL COORDINATE WITH OTHER UTILITIES TO ASSURE PROPER DEPTH AND PREVENT ANY CONFLICT OF UTILITIES.
10. CONTRACTOR SHALL GROUT AROUND ALL PIPE ENTRANCES TO SANITARY SEWER MANHOLES WITH NON-SHRINKING GROUT TO ASSURE CONNECTION IS WATER TIGHT.
11. CONTRACTOR SHALL ON ALL UTILITIES, COORDINATE INSPECTION WITH THE APPROPRIATE AUTHORITIES PRIOR TO COVERING TRENCHES AT INSTALLATION.
12. THE CONTRACTOR SHALL CONDUCT ALL REQUIRED TESTS TO THE SATISFACTION OF THE RESPECTIVE UTILITY COMPANIES AND OWNERS INSPECTING AUTHORITIES.
13. SITE CONTRACTOR TO COORDINATE PROPOSED RECONNECTION OF ALL UTILITIES WITH ARCHITECTURAL PLANS AS WELL AS UTILITY COMPANIES AND BUILDING CONTRACTOR. THE GENERAL CONTRACTOR IS RESPONSIBLE FOR ANY AND ALL EXPENSES THAT RESULT FROM DELAYED OR FAILED TEST DURING ANY PHASE OF THE CONSTRUCTION PROCESS. THIS INCLUDES FEES INCURRED THROUGH RESCHEDULING OF ANY RACETRAC VENDORS OR EQUIPMENT TO ACCOMMODATE.
14. EXISTING UTILITY LINES SHOWN ARE APPROXIMATE LOCATIONS ONLY. THE CONTRACTOR SHALL FIELD VERIFY ALL EXISTING UTILITY LINE LOCATIONS PRIOR TO ANY CONSTRUCTION. ANY DEVIATIONS FROM THE DESIGN LOCATIONS SHALL BE REPORTED TO THE OWNER OR ENGINEER PRIOR TO CONSTRUCTION.
15. CONTRACTOR SHALL REFER TO PLANS BY OTHERS FOR ENTRY LOCATION OF ALL WATER, SEWER SERVICE, ELECTRICAL, AND TELEPHONE SERVICE. CONTRACTOR SHALL COORDINATE INSTALLATION OF UTILITIES IN SUCH A MANNER AS TO AVOID CONFLICTS AND ASSURE PROPER DEPTHS ARE ACHIEVED AS WELL AS COORDINATING WITH THE REGULATORY AGENCY AS TO THE LOCATION AND TIE-INS/CONNECTIONS TO THEIR FACILITIES.
16. SEE COVER SHEET FOR LIST OF UTILITY COMPANIES AND CONTACT PERSONS.
17. THE CONTRACTOR SHALL COORDINATE THE INSTALLATION OF ALL UNDERGROUND UTILITIES WITH HIS WORK. ALL UNDERGROUND UTILITIES (WATER, SANITARY SEWER, STORM SEWER, ELECTRICAL CONDUIT, IRRIGATION SYSTEMS, AND ANY OTHER MISC. UTILITIES) SHALL BE IN PLACE PRIOR TO THE PLACEMENT OF BASE COURSE MATERIAL, AND THE PLACEMENT OF ANY APPROPRIATE SOIL STABILIZATION TECHNIQUE.
18. CONTRACTOR SHALL PROVIDE BOLLARDS FOR PROTECTION OF ALL ABOVE GROUND UTILITIES AND APPURTENANCES ADJACENT TO DRIVE AREAS.

WATER NOTES:

1. ALL VERTICAL BENDS ON WATER MAIN SHALL BE RESTRAINED WITH A MECHANICAL JOINT FITTING SUPPLIED WITH THE RETAINER GLANDS. ANY JOINTS 25 FEET OR LESS FROM EITHER SIDE OF VERTICAL BEND SHALL BE RESTRAINED WITH A RETAINER GLAND.
2. DIMENSIONS SHOWN ARE TO CENTERLINE OF PIPE OR FITTING.
3. THRUST BLOCKS SHALL BE PROVIDED AT ALL HORIZONTAL BENDS, TEES, AND FIRE HYDRANTS.
4. THE MINIMUM COVER ON WATER MAINS SHALL BE 3 FEET.
5. PIPE MATERIAL SHALL BE "ENDOPURE" PE 3408 - 200PSI.
6. GENERAL CONTRACTOR IS RESPONSIBLE TO COORDINATE THE IRRIGATION SYSTEM REQUIREMENTS BETWEEN THE IRRIGATION CONTRACTOR AND PLUMBING CONTRACTOR. IRRIGATION TAP, METERS, ETC. SHALL BE INCLUDED IN GENERAL CONTRACTOR'S BASE BID.

SANITARY SEWER NOTES:

1. SANITARY SEWER PIPE OF DIFFERENT MATERIAL SHALL BE JOINED BY A RUBBER SLEEVE WITH STAINLESS STEEL COUPLING, MADE FOR TRANSITIONS FROM ONE MATERIAL TO ANOTHER.
2. DIMENSIONS SHOWN ARE TO CENTERLINE OF PIPE OR TO CENTERLINE OF MANHOLE.
3. THE SANITARY SEWER PIPE MATERIAL SHALL BE PVC, SCHEDULE 40, SEWER PIPE UNLESS OTHERWISE NOTED ON PLAN.
4. ALL MANHOLE COVERS SHALL BE TRAFFIC RATED FOR H-20 LOADING.

POWER NOTES:

1. CONTRACTOR IS RESPONSIBLE FOR INSTALLING ALL NECESSARY CONDUIT AND PULL WIRE ON-SITE UP TO PROPERTY. CONTRACTOR SHALL COORDINATE THE INSTALLATION OF THE SERVICE LINES WITH THE POWER COMPANY.
2. CONTRACTOR SHALL PROVIDE TRANSFORMER PAD (UNLESS TRANSFORMER IS POLE MOUNTED) TO ALLOW FOR INSTALLATION OF TRANSFORMER BY POWER COMPANY.

TELEPHONE NOTES:

1. CONTRACTOR IS RESPONSIBLE FOR INSTALLING THE PVC CONDUIT INCLUDING TRENCHING BEDDING, PULL WIRE, AND BACKFILLING. CONTRACTOR SHALL BE RESPONSIBLE FOR CONTACTING THE TELEPHONE COMPANY TO SCHEDULE AND COORDINATE WORK PRIOR TO INSTALLING CONDUIT.

FIRE FLOW NOTE:

MINIMUM FIRE FLOW REQUIRED BASED ON NFPA1 CHAPTER 18 - TABLE 18.4.5.2.1 FOR A BUILDING WITH A TYPE II DESIGNATED CONSTRUCTION THE FIRE FLOW MIN. REQUIRED IS 1500 GPM

DATUM NOTE:

ELEVATIONS SHOWN HEREON ARE IN FEET AND BASED ON THE NATIONAL AMERICAN VERTICAL DATUM OF 1988 (NAVD 1988).

UTILITY LEGEND

EXISTING NOTE	TYPICAL NOTE TEXT	PROPOSED NOTE
—W—W—	UNDERGROUND WATER LINE	—W—W—
—T—T—	UNDERGROUND TELEPHONE LINE	
—OH—OH—	OVERHEAD SERVICE WIRES	
= = = = =	STORM SEWER	▬▬▬
—S—S—	SANITARY SEWER	—SL—SL—
	STORM DRAIN LATERAL	—D—D—
(hydrant symbol)	HYDRANT	
(S)	SANITARY MANHOLE	
(inlet symbol)	CURB INLET	(inlet symbol)
	BACKFLOW PREVENTER	(symbol)
	WATER METER	(symbol)
X.XX	GRADE SPOT SHOT	X.XX

THOMAS ENGINEERING GROUP
CIVIL ENGINEERS - PROJECT MANAGERS - LAND PLANNING - LANDSCAPE ARCHITECTS
1000 CORPORATE DR. SUITE 250 FT. LAUDERDALE, FL 33334 P: 954-202-7000
4950 W. KENNEDY BLVD. SUITE 600 TAMPA, FL 33609 P: 813-379-4100
125 W INDIANTOWN RD. SUITE 206 JUPITER, FL 33458 P: 561-203-7503

THE INFORMATION, DESIGN AND CONTENT OF THIS PLAN ARE PROPRIETARY AND SHALL NOT BE COPIED OR USED FOR ANY PURPOSE WITHOUT PRIOR WRITTEN AUTHORIZATION FROM THOMAS ENGINEERING GROUP, LLC. ONLY APPROVED, SIGNED AND SEALED PLANS SHALL BE UTILIZED FOR CONSTRUCTION PURPOSES © 2015 THOMAS ENGINEERING GROUP, LLC.

REVISIONS:

REV:	DATE:	COMMENT:	BY:

KNOW WHAT'S BELOW ALWAYS CALL 811 BEFORE YOU DIG
It's fast. It's free. It's the law.
www.callsunshine.com

PROJECT No.: FJ150025
DRAWN BY: RFJ
CHECKED BY: JMG
DATE: 04/19/16
CAD I.D.: FJ150025-WSU PLAN

PROJECT:
AVENUE L RETAIL
FOR
EQUITAS

BLUE HERON BLVD. & AVENUE L
RIVIERA BEACH, FLORIDA

THOMAS ENGINEERING GROUP
RADICE III
1000 CORPORATE DRIVE, SUITE 250
FORT LAUDERDALE, FL 33334
PH: (954) 202-7000
FX: (954) 202-7070
www.ThomasEngineeringGroup.com

JASON M. GUNTHER
PROFESSIONAL ENGINEER
September 26, 2016
FLORIDA LICENSE No. 58629
FLORIDA BUSINESS CERT. OF AUTH. No. 27528

SHEET TITLE:
UTLITY PLAN

SHEET NUMBER:
C-10

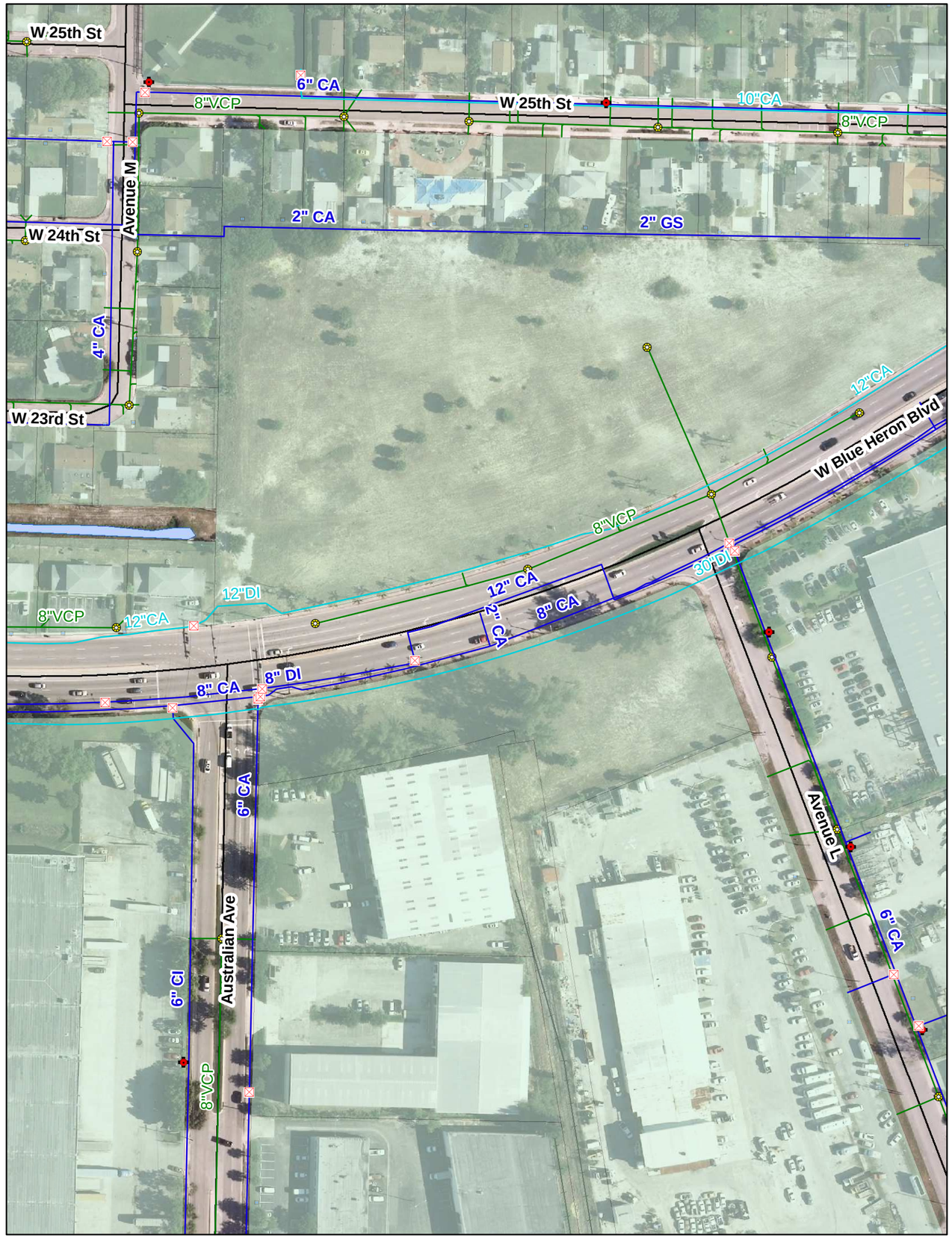
W 25th St
6" CA
8"VCP
W 25th St
10"CA
8"VCP
Avenue M
2" CA
2" GS
W 24th St
4" CA
W 23rd St
12"CA
W Blue Heron Blvd
8"VCP
30"DI
12" CA
12"DI
8"VCP
12"CA
2" CA
8" CA
8" CA
8" DI
6" CA
Avenue L
6" CA
Australian Ave
6" CI
8"VCP

January 4, 2017

Jason M Gunther, P.E.
Thomas Engineering Group
125 W. Indiantown Road, Suite 206
Jupiter, Florida 33458

RE: West Blue Heron and Avenue L Retail Store Site Plan (SP-16-16)
PCN: 56-43-42-28-31-015-0010

Dear Mr. Gunther,

The intent of this letter is to inform you that City staff has completed departmental review for the West Blue Heron Boulevard and Avenue L Retail Store Site Plan Application (SP-16-16). The City is responding to the SP-16-16 application with the following comments:

Building Department – see attached comments.

Engineering/Public Works Department – see attached comments.

Police Department – see attached comments.

Code Enforcement Department – see attached comments.

Fire Department – see attached comments.

Utility District Department – see attached comments.

Planning and Zoning Department

1. Provide approval from the Florida Department of Transportation for the proposed driveway entrance along Blue Heron Boulevard. It was stated that the pre-application letter was included in the resubmittal; however, this item was missing from the package.
2. Provide a letter of agreement for shared access between the proposed site and adjacent property to the west. It was stated that the Amendment to the Purchase Contract was included in the resubmittal; however, this item was missing from the package.

Please respond to the above comments in writing and submit the revised documents as necessary. It is important to note that a detailed narrative addressing each comment must be included when

submitting the revised documents. Any revisions submitted without a detailed narrative shall be returned to the applicant without any further processing by the City.

Please feel free to contact me at (561) 845-3427 or by email at dspradley@rivierabch.com should you have any questions or concerns.

Sincerely,

DeAndrae Spradley
Principal Planner

Cc: Terrence Bailey, Director of Community Development
Jeff Gagnon, Assistant Director of Community Development

CITY OF RIVIERA BEACH • P. O. Drawer 10682 • RIVIERA BEACH, FLORIDA 33419
DEPARTMENT OF PUBLIC WORKS INTER-DEPARTMENTAL COMMUNICATION
Tel. (561) 845-4080 **Fax (561) 840-4845**

TO: DeAndrae L. Spradley, Principal Planner
FROM: Terrence N. Bailey, PE
DATE: 12/12/16
RE: Blue Heron/Ave L Retail Site Plan Review– SP-16-16 Review
==========

Engineering Division offer the following comments, the project may move forward with site plan approval:

General Comment:

- The proposed watermain down the northbound lane of Avenue L will require that the pavement replacement per the City's typical section below. Please add this to sheet C-05 for pavement work in the City right of way.

CROSS–SECTION REQUIREMENTS

NEW CONSTRUCTION
1"TYPE S III SURFACE COURSE
1 ½" TYPE S I STRUCTURAL COURSE

TACK COAT AT 0.05 GAL./SQ.YD.
RC–70 PRIME COAT AT 0.10 GAL./SQ.YD.

8" LIMEROCK BASE (LBR 100) COMPACTED TO 98%
MAX. DENSITY IN ACCORDANCE WITH AASHTO T–180

TYPE–B 12" STABILIZED SUBGRADE (LBR 40) COMPACTED TO 98%
MAX. DENSITY IN ACCORDANCE WITH AASHTO T–180

- Drainage structure No. 6 should have an open graded manhole lid similar to a US Foundry USF 5665 grate.
- The landscape plan sheet L-2 does not depict the proposed power transformer in the southeast corner of the property and the landscaping does not appear to leave space for the transformer.
- A copy of the plat was not provided.
- The ICPR calculations appear to run the 25yr and 100yr storms for only 72 hours. These storms should be run for 144 hrs to insure peak stages do not occur after the 72 hr calculation period.

Terrence N. Bailey, P.E.
City Engineer

CITY OF RIVIERA BEACH • P. O. Drawer 10682 • RIVIERA BEACH, FLORIDA 33419
DEPARTMENT OF PUBLIC WORKS INTER-DEPARTMENTAL COMMUNICATION
Tel. (561) 845-4080 **Fax (561) 840-4845**

TO: DeAndrae L. Spradley, Principal Planner
FROM: Terrence N. Bailey, PE
DATE: 1/30/17
RE: Blue Heron/Ave L Retail Site Plan Review– SP-16-16 Review
==========

Engineering Division has reviewed the submittal and approves moving the project forward with site plans approval.

Terrence N. Bailey, P.E.
City Engineer

CITY OF RIVIERA BEACH

600 WEST BLUE HERON BLVD. • RIVIERA BEACH, FLORIDA 33404
(561) 845-4104 (561) 845-4137

OFFICE OF THE
FIRE CHIEF

TO: DeAndrae Spradley, P & Z

FROM: Frank Stallworth, Fire Inspector

DATE: December 11, 2016

SUBJECT: Equitas Retail Site Plan Review, located at West Blue Heron, and Avenue "L" Retail. (SP-16-16) PCN: 56-43-42-28-31-015-0050.

Comments:

The Fire Prevention Bureau received and reviewed the site plans for the Equitas Retail Project. The proposed building is 8,247 Square feet and one story in high. The Fire Prevention Bureau has no comments at this time.

Department File: 1080 W Blue Heron Blvd.

MEMORANDUM

To: **DeAndrae Spradley, Principal Planner**

From: **Leighton Walker, Utilities Engineer**

Date: **January 24, 2017**

Re: **Family Dollar Site Plan (SP-16-16) Review Ave L & Blue Heron**

The Utility District **Approves** the site plan as submitted (See attached documents).

LCW

Walker, Leighton C

From: Jason Gunther <jgunther@Thomaseg.com>
Sent: Monday, January 23, 2017 8:44 AM
To: Walker, Leighton C
Cc: Spradley, DeAndrae L.
Subject: Avenue L Retail
Attachments: C-07 UTLITY PLAN.pdf

Leighton, attached is the revised plan we spoke about Friday whereon I added the (2) gate valves and am proposing an easement expansion adjacent to the building. I believe you are now accepting of this project moving forward. Can you confirm to DeAndrae.

Jason M. Gunther, P.E.

THOMAS ENGINEERING GROUP

THOMAS ENGINEERING GROUP
125 West Indiantown Road, Suite 206
Jupiter, FL 33458

P: 561-203-7503
C: 954-319-7616

Email:jgunther@thomaseg.com
www.ThomasEngineeringGroup.com

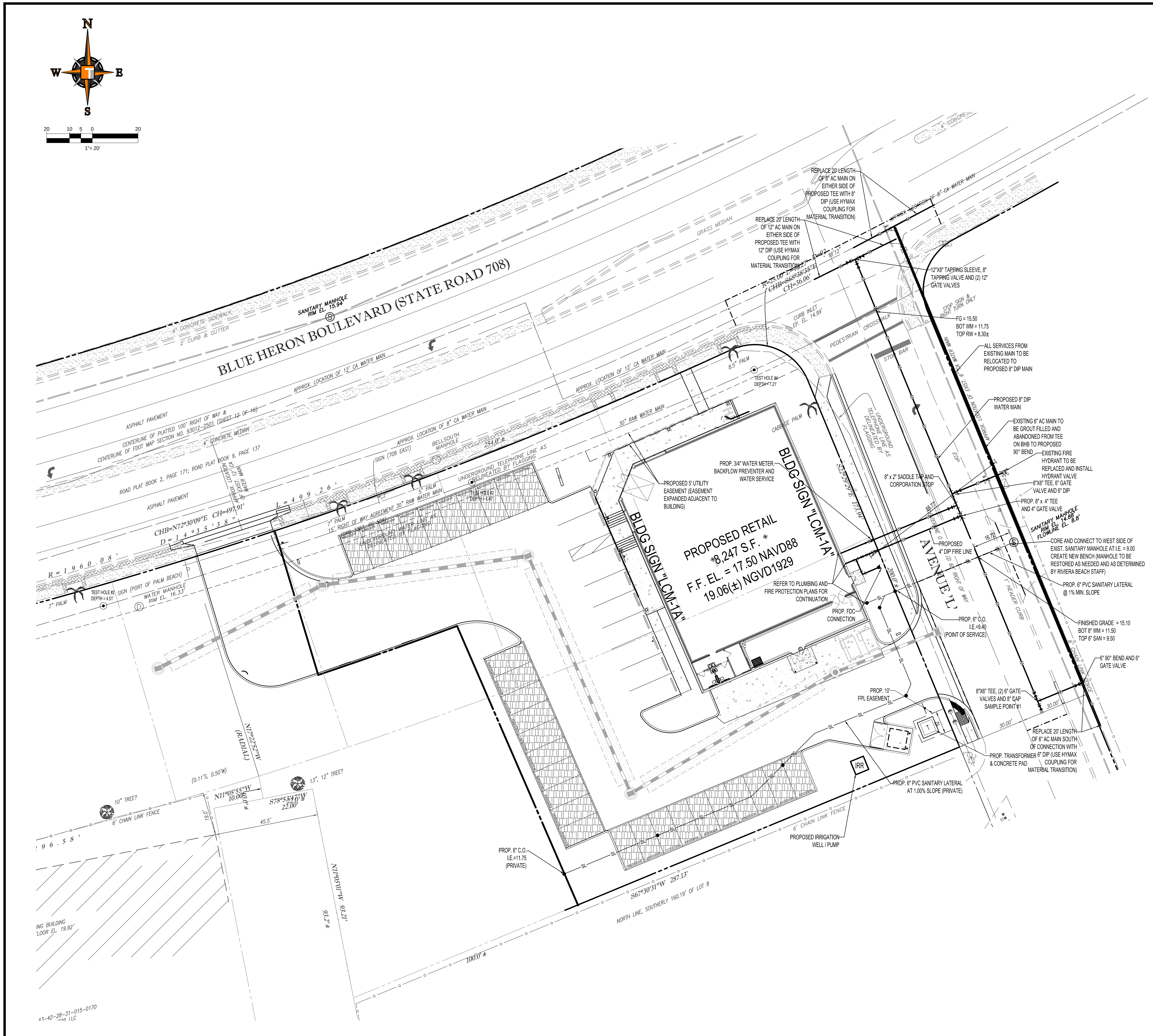

Printed on Monday, January 23, 2017, 8:37 AM by Jason Gunther
R:\EQUITAS\FJ150025 - FAMILY DOLLAR, BLUE HERON & AVENUE L, RIVIERA BEACH\DWG\SITE PLAN ENTITLEMENTS\FJ150025-WSU PLAN----->LAYOUT: C-10 UTILITY PLAN

UTILITY NOTES:

1. CONTRACTOR IS RESPONSIBLE FOR VERIFYING ALL UTILITIES AND NOTIFYING THE APPROPRIATE UTILITY COMPANY PRIOR TO BEGINNING CONSTRUCTION.
2. THE LOCATION AND/OR ELEVATION OF EXISTING UTILITIES AS SHOWN ON THESE PLANS IS BASED ON RECORDS OF THE VARIOUS UTILITY COMPANIES AND, WHERE POSSIBLE, MEASUREMENTS TAKEN IN THE FIELD. THE INFORMATION IS NOT TO BE RELIED ON AS BEING EXACT OR COMPLETE. THE CONTRACTOR MUST CALL THE APPROPRIATE UTILITY COMPANY AT LEAST 48 HOURS BEFORE ANY EXCAVATION TO REQUEST EXACT FIELD LOCATION OF THE UTILITIES. IT SHALL BE THE RESPONSIBILITY OF THE CONTRACTOR TO RELOCATE ALL EXISTING UTILITIES WHICH CONFLICT WITH THE PROPOSED IMPROVEMENTS SHOWN ON THE PLANS.
3. CONTRACTOR SHALL VERIFY HORIZONTAL AND VERTICAL LOCATION OF ALL EXISTING STORM SEWER STRUCTURES, PIPES, AND ALL UTILITIES PRIOR TO CONSTRUCTION.
4. CONTRACTOR IS RESPONSIBLE FOR REPAIRS OF DAMAGE TO ANY EXISTING IMPROVEMENTS DURING CONSTRUCTION, SUCH AS, BUT NOT LIMITED TO, UTILITIES, PAVEMENT, STRIPING, CURBS, ETC. REPAIRS SHALL BE EQUAL TO OR BETTER THAN EXISTING CONDITIONS.
5. CONTRACTOR SHALL REFER TO ARCHITECTS PLANS AND SPECIFICATIONS FOR ACTUAL LOCATION OF ALL UTILITY ENTRANCES CONTRACTOR SHALL COORDINATE INSTALLATION OF UTILITIES IN SUCH A MANNER AS TO AVOID CONFLICTS AND ASSURE PROPER DEPTHS ARE ACHIEVED AS WELL AS COORDINATING WITH CITY UTILITY REQUIREMENTS AS TO LOCATIONS AND SCHEDULING FOR TIE-INS/CONNECTIONS PRIOR TO CONNECTING EXISTING FACILITIES.
6. CONTRACTOR SHALL COORDINATE WITH ARCHITECTURAL PLANS, POWER COMPANY, & TELEPHONE COMPANY FOR ACTUAL ROUTING OF POWER AND TELEPHONE SERVICE TO BUILDING.
7. SEE DETAIL SHEETS FOR BACKFILLING AND COMPACTION REQUIREMENTS ON UTILITY TRENCHES.
8. CONTRACTOR SHALL COMPLY TO THE FULLEST EXTENT WITH THE LATEST STANDARD OF OSHA DIRECTIVES OR ANY OTHER AGENCY HAVING JURISDICTION FOR EXCAVATION AND TRENCHING PROCEDURES. THE CONTRACTOR SHALL USE SUPPORT SYSTEMS, SLOPING, BENCHING, AND OTHER MEANS OF PROTECTION. THIS TO INCLUDE BUT NOT LIMITED TO, ACCESS AND EGRESS FROM ALL EXCAVATION AND TRENCHING. CONTRACTOR IS RESPONSIBLE TO COMPLY WITH PERFORMANCE CRITERIA FOR OSHA.
9. CONTRACTOR SHALL COORDINATE WITH OTHER UTILITIES TO ASSURE PROPER DEPTH AND PREVENT ANY CONFLICT OF UTILITIES.
10. CONTRACTOR SHALL GROUT AROUND ALL PIPE ENTRANCES TO SANITARY SEWER MANHOLES WITH NON-SHRINKING GROUT TO ASSURE CONNECTION IS WATER TIGHT.
11. CONTRACTOR SHALL ON ALL UTILITIES, COORDINATE INSPECTION WITH THE APPROPRIATE AUTHORITIES PRIOR TO COVERING TRENCHES AT INSTALLATION.
12. THE CONTRACTOR SHALL CONDUCT ALL REQUIRED TESTS TO THE SATISFACTION OF THE RESPECTIVE UTILITY COMPANIES AND OWNERS INSPECTING AUTHORITIES.
13. SITE CONTRACTOR TO COORDINATE PROPOSED RECONNECTION OF ALL UTILITIES WITH ARCHITECTURAL PLANS AS WELL AS UTILITY COMPANIES AND BUILDING CONTRACTOR. THE GENERAL CONTRACTOR IS RESPONSIBLE FOR ANY AND ALL EXPENSES THAT RESULT FROM DELAYED OR FAILED TEST DURING ANY PHASE OF THE CONSTRUCTION PROCESS. THIS INCLUDES FEES INCURRED THROUGH RESCHEDULING OF ANY RACETRAC VENDORS OR EQUIPMENT TO ACCOMMODATE.
14. EXISTING UTILITY LINES SHOWN ARE APPROXIMATE LOCATIONS ONLY. THE CONTRACTOR SHALL FIELD VERIFY ALL EXISTING UTILITY LINE LOCATIONS PRIOR TO ANY CONSTRUCTION. ANY DEVIATIONS FROM THE DESIGN LOCATIONS SHALL BE REPORTED TO THE OWNER OR ENGINEER PRIOR TO CONSTRUCTION.
15. CONTRACTOR SHALL REFER TO PLANS BY OTHERS FOR ENTRY LOCATION OF ALL WATER, SEWER SERVICE, ELECTRICAL, AND TELEPHONE SERVICE. CONTRACTOR SHALL COORDINATE INSTALLATION OF UTILITIES IN SUCH A MANNER AS TO AVOID CONFLICTS AND ASSURE PROPER DEPTHS ARE ACHIEVED AS WELL AS COORDINATING WITH THE REGULATORY AGENCY AS TO THE LOCATION AND TIE-INS/CONNECTIONS TO THEIR FACILITIES.
16. SEE COVER SHEET FOR LIST OF UTILITY COMPANIES AND CONTACT PERSONS.
17. THE CONTRACTOR SHALL COORDINATE THE INSTALLATION OF ALL UNDERGROUND UTILITIES WITH HIS WORK. ALL UNDERGROUND UTILITIES (WATER, SANITARY SEWER, STORM SEWER, ELECTRICAL CONDUIT, IRRIGATION SYSTEMS, AND ANY OTHER MISC. UTILITIES) SHALL BE IN PLACE PRIOR TO THE PLACEMENT OF BASE COURSE MATERIAL, AND THE PLACEMENT OF ANY APPROPRIATE SOIL STABILIZATION TECHNIQUE.
18. CONTRACTOR SHALL PROVIDE BOLLARDS FOR PROTECTION OF ALL ABOVE GROUND UTILITIES AND APPURTENANCES ADJACENT TO DRIVE AREAS.
19. CONTRACTOR SHALL PROTECT EXISTING UTILITIES AT ALL TIMES DURING CONSTRUCTION INCLUDING PROVIDING DIRECT SUPPORT AND/OR SHORING OF EXCAVATED AREAS. THE CONTRACTOR SHALL NOTIFY AFFECTED UTILITY COMPANIES PRIOR TO ATTEMPTING ANY FACILITY SUPPORT. IF THE UTILITY COMPANY REQUIRES THAT ONLY THEIR CREWS MAY SUPPORT THEIR FACILITIES, THEN THE CONTRACTOR SHALL PROVIDE FOR THE COORDINATION AND PAYMENT.

WATER NOTES:

1. ALL VERTICAL BENDS ON WATER MAIN SHALL BE RESTRAINED WITH A MECHANICAL JOINT FITTING SUPPLIED WITH THE RETAINER GLANDS. ANY JOINTS 25 FEET OR LESS FROM EITHER SIDE OF VERTICAL BEND SHALL BE RESTRAINED WITH A RETAINER GLAND.
2. DIMENSIONS SHOWN ARE TO CENTERLINE OF PIPE OR FITTING.
3. THRUST BLOCKS SHALL BE PROVIDED AT ALL HORIZONTAL BENDS, TEES, AND FIRE HYDRANTS.
4. THE MINIMUM COVER ON WATER MAINS SHALL BE 3 FEET.
5. PIPE MATERIAL SHALL BE "ENDOPURE" PE 3408 - 200PSI.
6. GENERAL CONTRACTOR IS RESPONSIBLE TO COORDINATE THE IRRIGATION SYSTEM REQUIREMENTS BETWEEN THE IRRIGATION CONTRACTOR AND PLUMBING CONTRACTOR. IRRIGATION PUMP, WELL, ETC. SHALL BE INCLUDED IN GENERAL CONTRACTOR'S BASE BID.

SANITARY SEWER NOTES:

1. SANITARY SEWER PIPE OF DIFFERENT MATERIAL SHALL BE JOINED BY A RUBBER SLEEVE WITH STAINLESS STEEL COUPLING, MADE FOR TRANSITIONS FROM ONE MATERIAL TO ANOTHER.
2. DIMENSIONS SHOWN ARE TO CENTERLINE OF PIPE OR TO CENTERLINE OF MANHOLE.
3. THE SANITARY SEWER PIPE MATERIAL SHALL BE PVC, SCHEDULE 40, SEWER PIPE UNLESS OTHERWISE NOTED ON PLAN.
4. ALL MANHOLE COVERS SHALL BE TRAFFIC RATED FOR H-20 LOADING.

POWER NOTES:

1. CONTRACTOR IS RESPONSIBLE FOR INSTALLING ALL NECESSARY CONDUIT AND PULL WIRE ON-SITE UP TO PROPERTY. CONTRACTOR SHALL COORDINATE THE INSTALLATION OF THE SERVICE LINES WITH THE POWER COMPANY.
2. CONTRACTOR SHALL PROVIDE TRANSFORMER PAD (UNLESS TRANSFORMER IS POLE MOUNTED) TO ALLOW FOR INSTALLATION OF TRANSFORMER BY POWER COMPANY.

TELEPHONE NOTES:

1. CONTRACTOR IS RESPONSIBLE FOR INSTALLING THE PVC CONDUIT INCLUDING TRENCHING BEDDING, PULL WIRE, AND BACKFILLING. CONTRACTOR SHALL BE RESPONSIBLE FOR CONTACTING THE TELEPHONE COMPANY TO SCHEDULE AND COORDINATE WORK PRIOR TO INSTALLING CONDUIT.

FIRE FLOW NOTE:

MINIMUM FIRE FLOW REQUIRED BASED ON NFPA1 CHAPTER 18 - TABLE 18.4.5.2.1 FOR A BUILDING WITH A TYPE II DESIGNATED CONSTRUCTION THE FIRE FLOW MIN. REQUIRED IS 1500 GPM

DATUM NOTE:

ELEVATIONS SHOWN HEREON ARE IN FEET AND BASED ON THE NATIONAL AMERICAN VERTICAL DATUM OF 1988 (NAVD 1988).

UTILITY LEGEND

EXISTING NOTE	TYPICAL NOTE TEXT	PROPOSED NOTE
———	UNDERGROUND WATER LINE	—W—W—
———	UNDERGROUND TELEPHONE LINE	
———	OVERHEAD SERVICE WIRES	
- - - -	STORM SEWER	▬▭▬▭
———	SANITARY SEWER	—SL—SL—
	STORM DRAIN LATERAL	—D—D—
(symbol)	HYDRANT	
(S)	SANITARY MANHOLE	
(symbol)	CURB INLET	(symbol)
	BACKFLOW PREVENTER	(symbol)
	WATER METER	(symbol)
X.XX	GRADE SPOT SHOT	X.XX

THOMAS
ENGINEERING GROUP
CIVIL ENGINEERS - PROJECT MANAGERS - LAND PLANNING - LANDSCAPE ARCHITECTS

1000 CORPORATE DR.
SUITE 250
FT. LAUDERDALE, FL 33334
P: 954-202-7000

4950 W. KENNEDY BLVD.
SUITE 600
TAMPA, FL 33609
P: 813-379-4100

125 W INDIANTOWN RD.
SUITE 206
JUPITER, FL 33458
P: 561-203-7503

THE INFORMATION, DESIGN AND CONTENT OF THIS PLAN ARE PROPRIETARY AND SHALL NOT BE COPIED OR USED FOR ANY PURPOSE WITHOUT PRIOR WRITTEN AUTHORIZATION FROM THOMAS ENGINEERING GROUP, LLC. ONLY APPROVED, SIGNED AND SEALED PLANS SHALL BE UTILIZED FOR CONSTRUCTION PURPOSES. © 2015 THOMAS ENGINEERING GROUP, LLC.

REVISIONS:

REV:	DATE:	COMMENT:	BY:

811 KNOW WHAT'S BELOW ALWAYS CALL 811 BEFORE YOU DIG
It's fast. It's free. It's the law.
www.callsunshine.com

PROJECT No.: FJ150025
DRAWN BY: RFJ
CHECKED BY: JMG
DATE: 04/19/16
CAD I.D.: FJ150025-WSU PLAN

PROJECT:

AVENUE L RETAIL

FOR

EQUITAS

BLUE HERON BLVD. & AVENUE L
RIVIERA BEACH,
FLORIDA

THOMAS
ENGINEERING GROUP

RADICE III
1000 CORPORATE DRIVE, SUITE 250
FORT LAUDERDALE, FL 33334
PH: (954) 202-7000
FX: (954) 202-7070
www.ThomasEngineeringGroup.com

JASON M. GUNTHER
PROFESSIONAL ENGINEER
January 23, 2017
FLORIDA LICENSE No. 58629
FLORIDA BUSINESS CERT. OF AUTH. No. 27528

SHEET TITLE:

UTLITY PLAN

SHEET NUMBER:

C-07

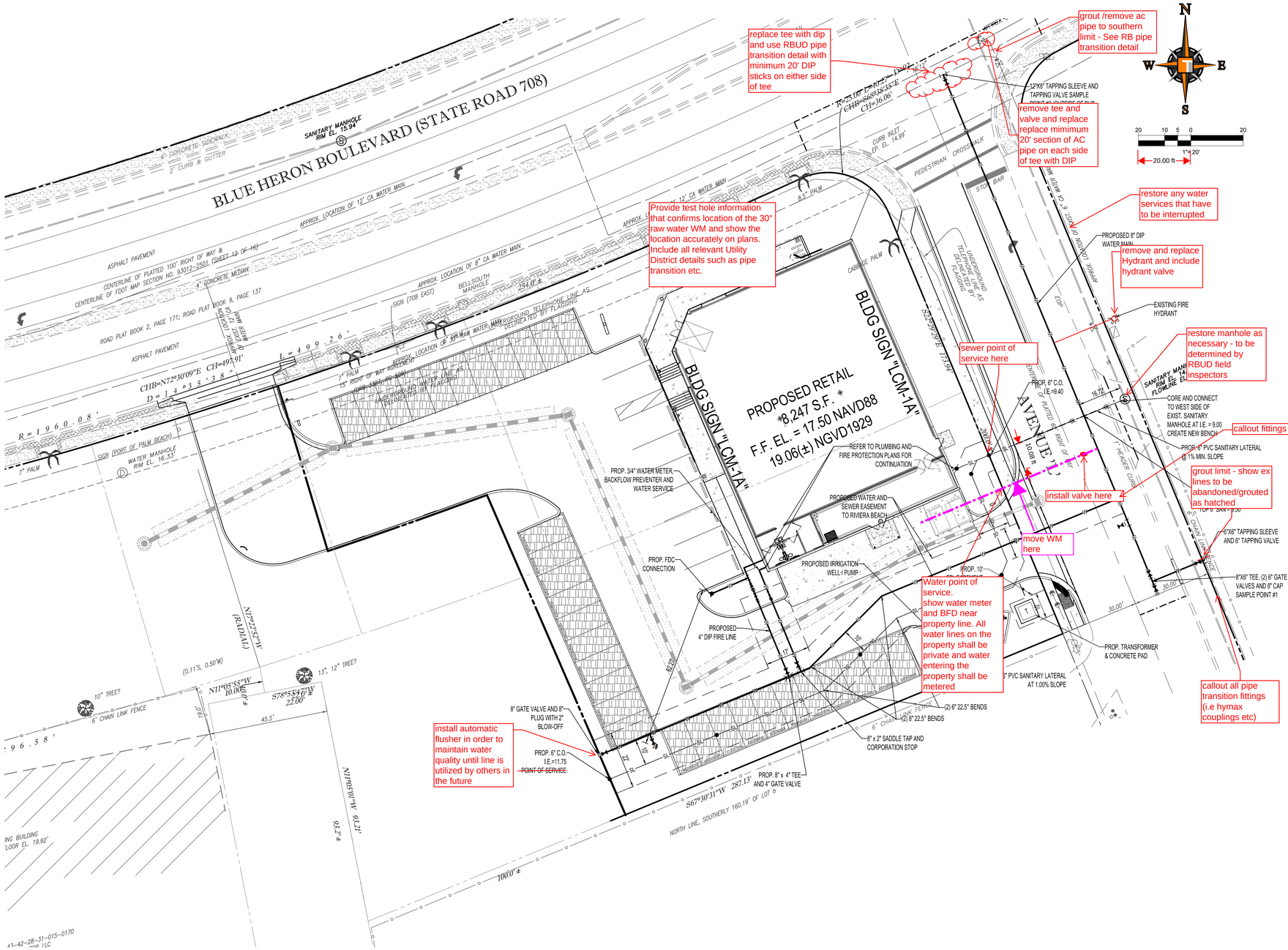

UTILITY NOTES:

1. CONTRACTOR IS RESPONSIBLE FOR VERIFYING ALL UTILITIES AND NOTIFYING THE APPROPRIATE UTILITY COMPANY PRIOR TO BEGINNING CONSTRUCTION.
2. THE LOCATION AND/OR ELEVATION OF EXISTING UTILITIES AS SHOWN ON THESE PLANS IS BASED ON RECORDS OF THE VARIOUS UTILITY COMPANIES AND, WHERE POSSIBLE, MEASUREMENTS TAKEN IN THE FIELD. THE INFORMATION IS NOT TO BE RELIED ON AS BEING EXACT OR COMPLETE. THE CONTRACTOR MUST CALL THE APPROPRIATE UTILITY COMPANY AT LEAST 72 HOURS BEFORE ANY EXCAVATION TO REQUEST EXACT FIELD LOCATION OF THE UTILITIES. IT SHALL BE THE RESPONSIBILITY OF THE CONTRACTOR TO RELOCATE ALL EXISTING UTILITIES WHICH CONFLICT WITH THE PROPOSED IMPROVEMENTS SHOWN ON THE PLANS.
3. CONTRACTOR SHALL VERIFY HORIZONTAL AND VERTICAL LOCATION OF ALL EXISTING STORM SEWER STRUCTURES, PIPES, AND ALL UTILITIES PRIOR TO CONSTRUCTION.
4. CONTRACTOR IS RESPONSIBLE FOR REPAIRS OF DAMAGE TO ANY EXISTING IMPROVEMENTS DURING CONSTRUCTION, SUCH AS, BUT NOT LIMITED TO, UTILITIES, PAVEMENT, STRIPING, CURBS, ETC. REPAIRS SHALL BE EQUAL TO OR BETTER THAN EXISTING CONDITIONS.
5. CONTRACTOR SHALL REFER TO ARCHITECTS PLANS AND SPECIFICATIONS FOR ACTUAL LOCATION OF ALL UTILITY ENTRANCES. CONTRACTOR SHALL COORDINATE INSTALLATION OF UTILITIES IN SUCH A MANNER AS TO AVOID CONFLICTS AND ASSURE PROPER DEPTHS ARE ACHIEVED AS WELL AS COORDINATING WITH CITY UTILITY REQUIREMENTS AS TO LOCATIONS AND SCHEDULING FOR TIE-INS/CONNECTIONS PRIOR TO CONNECTING EXISTING FACILITIES.
6. CONTRACTOR SHALL COORDINATE WITH ARCHITECTURAL PLANS, POWER COMPANY, & TELEPHONE COMPANY FOR ACTUAL ROUTING OF POWER AND TELEPHONE SERVICE TO BUILDING.
7. SEE DETAIL SHEETS FOR BACKFILLING AND COMPACTION REQUIREMENTS ON UTILITY TRENCHES.
8. CONTRACTOR SHALL COMPLY TO THE FULLEST EXTENT WITH THE LATEST STANDARD OF OSHA DIRECTIVES OR ANY OTHER AGENCY HAVING JURISDICTION FOR EXCAVATION AND TRENCHING PROCEDURES. THE CONTRACTOR SHALL USE SUPPORT SYSTEMS, SLOPING, BENCHING, AND OTHER MEANS OF PROTECTION. THIS TO INCLUDE BUT NOT LIMITED TO, ACCESS AND EGRESS FROM ALL EXCAVATION AND TRENCHING. CONTRACTOR IS RESPONSIBLE TO COMPLY WITH PERFORMANCE CRITERIA FOR OSHA.
9. CONTRACTOR SHALL COORDINATE WITH OTHER UTILITIES TO ASSURE PROPER DEPTH AND PREVENT ANY CONFLICT OF UTILITIES.
10. CONTRACTOR SHALL GROUT AROUND ALL PIPE ENTRANCES TO SANITARY SEWER MANHOLES WITH NON-SHRINKING GROUT TO ASSURE CONNECTION IS WATER TIGHT.
11. CONTRACTOR SHALL ON ALL UTILITIES, COORDINATE INSPECTION WITH THE APPROPRIATE AUTHORITIES PRIOR TO COVERING TRENCHES AT INSTALLATION.
12. THE CONTRACTOR SHALL CONDUCT ALL REQUIRED TESTS TO THE SATISFACTION OF THE RESPECTIVE UTILITY COMPANIES AND OWNERS INSPECTING AUTHORITIES.
13. SITE CONTRACTOR TO COORDINATE PROPOSED RECONNECTION OF ALL UTILITIES WITH ARCHITECTURAL PLANS AS WELL AS UTILITY COMPANIES AND BUILDING CONTRACTOR. THE GENERAL CONTRACTOR IS RESPONSIBLE FOR ANY AND ALL EXPENSES THAT RESULT FROM DELAYED OR FAILED TEST DURING ANY PHASE OF THE CONSTRUCTION PROCESS. THIS INCLUDES FEES INCURRED THROUGH RESCHEDULING OF ANY RACETRAC VENDORS OR EQUIPMENT TO ACCOMMODATE.
14. EXISTING UTILITY LINES SHOWN ARE APPROXIMATE LOCATIONS ONLY. THE CONTRACTOR SHALL FIELD VERIFY ALL EXISTING UTILITY LINE LOCATIONS PRIOR TO ANY CONSTRUCTION. ANY DEVIATIONS FROM THE DESIGN LOCATIONS SHALL BE REPORTED TO THE OWNER OR ENGINEER PRIOR TO CONSTRUCTION.
15. CONTRACTOR SHALL REFER TO PLANS BY OTHERS FOR ENTRY LOCATION OF ALL WATER, SEWER SERVICE, ELECTRICAL, AND TELEPHONE SERVICE. CONTRACTOR SHALL COORDINATE INSTALLATION OF UTILITIES IN SUCH A MANNER AS TO AVOID CONFLICTS AND ASSURE PROPER DEPTHS ARE ACHIEVED AS WELL AS COORDINATING WITH THE REGULATORY AGENCY AS TO THE LOCATION AND TIE-INS/CONNECTIONS TO THEIR FACILITIES.
16. SEE COVER SHEET FOR LIST OF UTILITY COMPANIES AND CONTACT PERSONS.
17. THE CONTRACTOR SHALL COORDINATE THE INSTALLATION OF ALL UNDERGROUND UTILITIES WITH HIS WORK. ALL UNDERGROUND UTILITIES (WATER, SANITARY SEWER, STORM SEWER, ELECTRICAL CONDUIT, IRRIGATION SYSTEMS, AND ANY OTHER MISC. UTILITIES) SHALL BE IN PLACE PRIOR TO THE PLACEMENT OF BASE COURSE MATERIAL, AND THE PLACEMENT OF ANY APPROPRIATE SOIL STABILIZATION TECHNIQUE.
18. CONTRACTOR SHALL PROVIDE BOLLARDS FOR PROTECTION OF ALL ABOVE GROUND UTILITIES AND APPURTENANCES ADJACENT TO DRIVE AREAS.
19. Add note: contractor shall protect existing utilities at all times during construction including providing direct support and/or shoring of excavated areas. the contractor shall notify affected utility companies prior to attempting any facility support. If the utility company requires that only their crews may support their facilities, then the contractor shall provide for the coordination and payment.

WATER MAIN NOTES:

1. ALL VERTICAL BENDS ON WATER MAIN SHALL BE RESTRAINED WITH A MECHANICAL JOINT FITTING SUPPLIED WITH THE RETAINER GLANDS. ANY JOINTS 25 FEET OR LESS FROM EITHER SIDE OF VERTICAL BEND SHALL BE RESTRAINED WITH A RETAINER GLAND.
2. DIMENSIONS SHOWN ARE TO CENTERLINE OF PIPE OR FITTING.
3. THRUST BLOCKS SHALL BE PROVIDED AT ALL HORIZONTAL BENDS, TEES, AND FIRE HYDRANTS.
4. THE MINIMUM COVER ON WATER MAINS SHALL BE 3 FEET.
5. PIPE MATERIAL SHALL BE "ENDOPURE" PE 3408 - 200PSI.
6. GENERAL CONTRACTOR IS RESPONSIBLE TO COORDINATE THE IRRIGATION SYSTEM REQUIREMENTS BETWEEN THE IRRIGATION CONTRACTOR AND PLUMBING CONTRACTOR. ~~IRRIGATION TAP, METERS, ETC.~~ SHALL BE INCLUDED IN GENERAL CONTRACTOR'S BASE BID.

SANITARY SEWER NOTES:

1. SANITARY SEWER PIPE OF DIFFERENT MATERIAL SHALL BE JOINED BY A RUBBER SLEEVE WITH STAINLESS STEEL COUPLING, MADE FOR TRANSITIONS FROM ONE MATERIAL TO ANOTHER.
2. DIMENSIONS SHOWN ARE TO CENTERLINE OF PIPE OR TO CENTERLINE OF MANHOLE.
3. THE SANITARY SEWER PIPE MATERIAL SHALL BE PVC, SCHEDULE 40, SEWER PIPE UNLESS OTHERWISE NOTED ON PLAN.
4. ALL MANHOLE COVERS SHALL BE TRAFFIC RATED FOR H-20 LOADING.

POWER NOTES:

1. CONTRACTOR IS RESPONSIBLE FOR INSTALLING ALL NECESSARY CONDUIT AND PULL WIRE ON-SITE UP TO PROPERTY. CONTRACTOR SHALL COORDINATE THE INSTALLATION OF THE SERVICE LINES WITH THE POWER COMPANY.
2. CONTRACTOR SHALL PROVIDE TRANSFORMER PAD (UNLESS TRANSFORMER IS POLE MOUNTED) TO ALLOW FOR INSTALLATION OF TRANSFORMER BY POWER COMPANY.

TELEPHONE NOTES:

1. CONTRACTOR IS RESPONSIBLE FOR INSTALLING THE PVC CONDUIT INCLUDING TRENCHING BEDDING, PULL WIRE, AND BACKFILLING. CONTRACTOR SHALL BE RESPONSIBLE FOR CONTACTING THE TELEPHONE COMPANY TO SCHEDULE AND COORDINATE WORK PRIOR TO INSTALLING CONDUIT.

FIRE FLOW NOTE:

MINIMUM FIRE FLOW REQUIRED BASED ON NFPA1 CHAPTER 18 - TABLE 18.4.5.2.1 FOR A BUILDING WITH A TYPE II DESIGNATED CONSTRUCTION THE FIRE FLOW MIN. REQUIRED IS 1500 GPM

DATUM NOTE:

ELEVATIONS SHOWN HEREON ARE IN FEET AND BASED ON THE NATIONAL AMERICAN VERTICAL DATUM OF 1988 (NAVD 1988).

UTILITY LEGEND

EXISTING NOTE	TYPICAL NOTE TEXT	PROPOSED NOTE
	UNDERGROUND WATER LINE	
	UNDERGROUND TELEPHONE LINE	
	OVERHEAD SERVICE WIRES	
	STORM SEWER	
	SANITARY SEWER	SL SL
	STORM DRAIN LATERAL	
	HYDRANT	
S	SANITARY MANHOLE	
	CURB INLET	
	BACKFLOW PREVENTER	
	WATER METER	
8.88	GRADE SPOT SHOT	XXX

THOMAS ENGINEERING GROUP
CIVIL ENGINEERS - PROJECT MANAGERS - LAND PLANNING - LANDSCAPE ARCHITECTS
1000 CORPORATE DR. SUITE 250 FT. LAUDERDALE, FL 33334 P: 954-202-7000
4950 W. KENNEDY BLVD. SUITE 600 TAMPA, FL 33609 P: 813-379-4100
125 W INDIANTOWN RD. SUITE 206 JUPITER, FL 33458 P: 561-203-7503

THE INFORMATION, DESIGN, AND CONTENT OF THIS PLAN ARE PROPRIETARY AND SHALL NOT BE COPIED OR USED FOR ANY PURPOSE WITHOUT PRIOR WRITTEN AUTHORIZATION FROM THOMAS ENGINEERING GROUP, LLC. ONLY APPROVED, SIGNED AND SEALED PLANS SHALL BE UTILIZED FOR CONSTRUCTION PURPOSES.

REVISIONS:

REV:	DATE:	COMMENT:	BY:

811 KNOW WHAT'S BELOW ALWAYS CALL 811 BEFORE YOU DIG
It's fast. It's free. It's the law.
www.callsunshine.com

PROJECT No.:	FJ150025
DRAWN BY:	RFJ
CHECKED BY:	JMG
DATE:	04/19/16
CAD I.D.:	FJ150025-WSU PLAN

PROJECT:

AVENUE L RETAIL

FOR

EQUITAS

BLUE HERON BLVD. & AVENUE L
RIVIERA BEACH,
FLORIDA

THOMAS ENGINEERING GROUP
RADICE III
1000 CORPORATE DRIVE, SUITE 250
FORT LAUDERDALE, FL 33334
PH: (954) 202-7000
FX: (954) 202-7070
www.ThomasEngineeringGroup.com

JASON M. GUNTHER
PROFESSIONAL ENGINEER
December 6, 2016
FLORIDA LICENSE No. 58629
FLORIDA BUSINESS CERT. OF AUTH. No. 27528

SHEET TITLE:

UTLITY PLAN

SHEET NUMBER:

C-07

Printed on: Tuesday, December 06, 2016, 11:26 AM by Jason Gunther

Department of Engineering and Public Works

P.O. Box 21229

West Palm Beach, FL 33416-1229

(561) 684-4000

FAX: (561) 684-4050

www.pbcgov.com

Palm Beach County Board of County Commissioners

Paulette Burdick, Mayor

Melissa McKinlay, Vice Mayor

Hal R. Valeche

Dave Kerner

Steven L. Abrams

Mary Lou Berger

Mack Bernard

County Administrator

Verdenia C. Baker

"An Equal Opportunity Affirmative Action Employer"

printed on recycled paper

March 14, 2017

Mr. Jeff Gagnon
Planning & Zoning Administrator
City of Riviera Beach
600 W Blue Heron Boulevard
Riviera Beach, FL 33404

RE: Avenue L Retail
Project #: 161211
Traffic Performance Standards Review

Dear Mr. Gagnon:

The Palm Beach County Traffic Division has reviewed the **Avenue L Retail** Traffic Analysis, revised February, 2017, pursuant to the Traffic Performance Standards in Article 12 of the Palm Beach County Unified Land Development Code (ULDC). The project is summarized as follows:

Municipality:	City of Riviera Beach
Location:	SE corner of Australian Avenue and W Blue Heron Boulevard
PCN #:	56-43-42-28-31-015-0010
Access:	Right-in/right-out driveway connection to W Blue Heron Boulevard and full access driveway connection to Avenue L
Existing Uses:	Vacant
Proposed Uses:	8,247 SF Variety Store
New Daily Trips:	201
New Peak Hour Trips:	12 (7/5) AM; 21 (11/10) PM
Build-out:	December 31, 2018

Based on our review, the Traffic Division has determined the proposed development does not have significant peak hour traffic impact (as defined in PBC TPS) on the roadway network and therefore meets the Traffic Performance Standards of Palm Beach County.

Please note the receipt of a Traffic Performance Standards (TPS) approval letter does not constitute the review and issuance of a Palm Beach County Right-of-Way (R/W) Construction Permit nor does it eliminate any requirements that may be deemed as site related. For work within Palm Beach County R/W, a detailed review of the project will be provided upon submittal for a R/W permit application. The project is required to comply with all Palm Beach County standards and may include R/W dedication.

No building permits are to be issued by the City after the build-out date specified above.

The approval letter shall be valid no longer than one year from date of issuance, unless an application for a Site Specific Development Order has been approved, an application for a Site Specific Development Order has been submitted, or the approval letter has been superseded by another approval letter for the same property.

If you have any questions regarding this determination, please contact me at 561-684-4030 or email QBari@pbcgov.org.

Sincerely,

Quazi Bari, P.E.
Senior Professional Engineer
Traffic Division

QB:DS/dd

ec: Adressee
Natalia T. Lercari, P.E.., McMahon Transportation Engineers & Planners
Dominique Simeus, E.I., Project Coordinator II, Traffic Division
Steve Bohovsky, Technical Assistant III, Traffic Division

File: General - TPS - Mun - Traffic Study Review
N:\TRAFFIC\DS\MUNICIPALITIES\APPROVALS\2017\161211 - AVENUE L RETAIL.DOC

McMAHON
TRANSPORTATION ENGINEERS & PLANNERS

Avenue L Retail

Traffic Analysis

Prepared For:

Equitas Management Group

City of Riviera Beach

February 2017

AVENUE L RETAIL
TRAFFIC ANALYSIS

Prepared For:

Equitas Management Group
2034 Hamilton Place Boulevard, Suite 400
Chattanooga, TN 37421

Prepared By:

McMahon Associates, Inc.
2090 Palm Beach Lakes Blvd, Suite 400
West Palm Beach, FL 33409

Natalia Thais Lercari, P.E.
Professional Engineer
License No. 68205
State of Florida, Board of Professional Engineers
Certificate of Authorization No. 4908

February 2017

TABLE OF CONTENTS

SECTION **PAGE**

1.0 INTRODUCTION 1

2.0 DATA 3

3.0 TRAFFIC VOLUME COMPONENTS 4

3.1 Background Traffic Growth 4

3.2 Project Trip Generation 4

3.3 Project Traffic Distribution 4

3.4 Future Total Traffic Projections 6

4.0 TRAFFIC PERFORMANCE STANDARDS 8

4.1 Radius of Influence 8

4.2 Test One – Part One: Intersection Analysis 8

4.3 Test One – Part Two: Roadway Links 8

4.3.1 Significance 8

4.3.2 Link Capacity Analysis 12

4.4 Test Two – Five-Year Analysis 12

4.4.1 Significance 12

4.4.2 Link Capacity Analysis 12

5.0 DRIVEWAY ANALYSIS 15

6.0 CONCLUSION 21

LIST OF FIGURES

TITLE		PAGE
Figure 1	Site Location	2
Figure 2	Project Net New Distribution	7
Figure 3	Radius of Influence	9
Figure 4	Project Net New Distribution – Driveways and Adjacent Intersections	16
Figure 5	Project Pass-By Distribution – Driveways	17
Figure 6	Driveway Volumes – Net New	18
Figure 7	Driveway Volumes – Pass-By	19
Figure 8	Driveway Volumes – Total	20

LIST OF TABLES

TITLE		PAGE
Table 1	Trip Generation Analysis	5
Table 2	AM Peak Hour Significance Analysis – Test 1	10
Table 3	PM Peak Hour Significance Analysis – Test 1	11
Table 4	AM Peak Hour Significance Analysis – Test 2	13
Table 5	PM Peak Hour Significance Analysis – Test 2	14

LIST OF APPENDICES

Appendix A Site Plan
Appendix B Palm Beach County Volume Data
Appendix C Trip Generation Rates
Appendix D FDOT Pre-Approval Letter

1.0 INTRODUCTION

McMahon Associates, Inc. (McMahon) has completed a traffic analysis associated with the development of a parcel of land located on the southwest corner of Blue Heron Boulevard and Avenue L, in the City of Riviera Beach. The Parcel Control Number (PCN) for the site is 56-43-42-28-31-015-0010. The site is currently vacant. The proposed development, with an anticipated buildout year of 2018, will include an 8,247 square foot variety store. The site location is graphically depicted on **Figure 1.** The site plan is attached in **Appendix A**

The traffic impacts of the proposed development have been evaluated in accordance with Article 12 of the Palm Beach County Traffic Performance Standards (TPS) requirements.

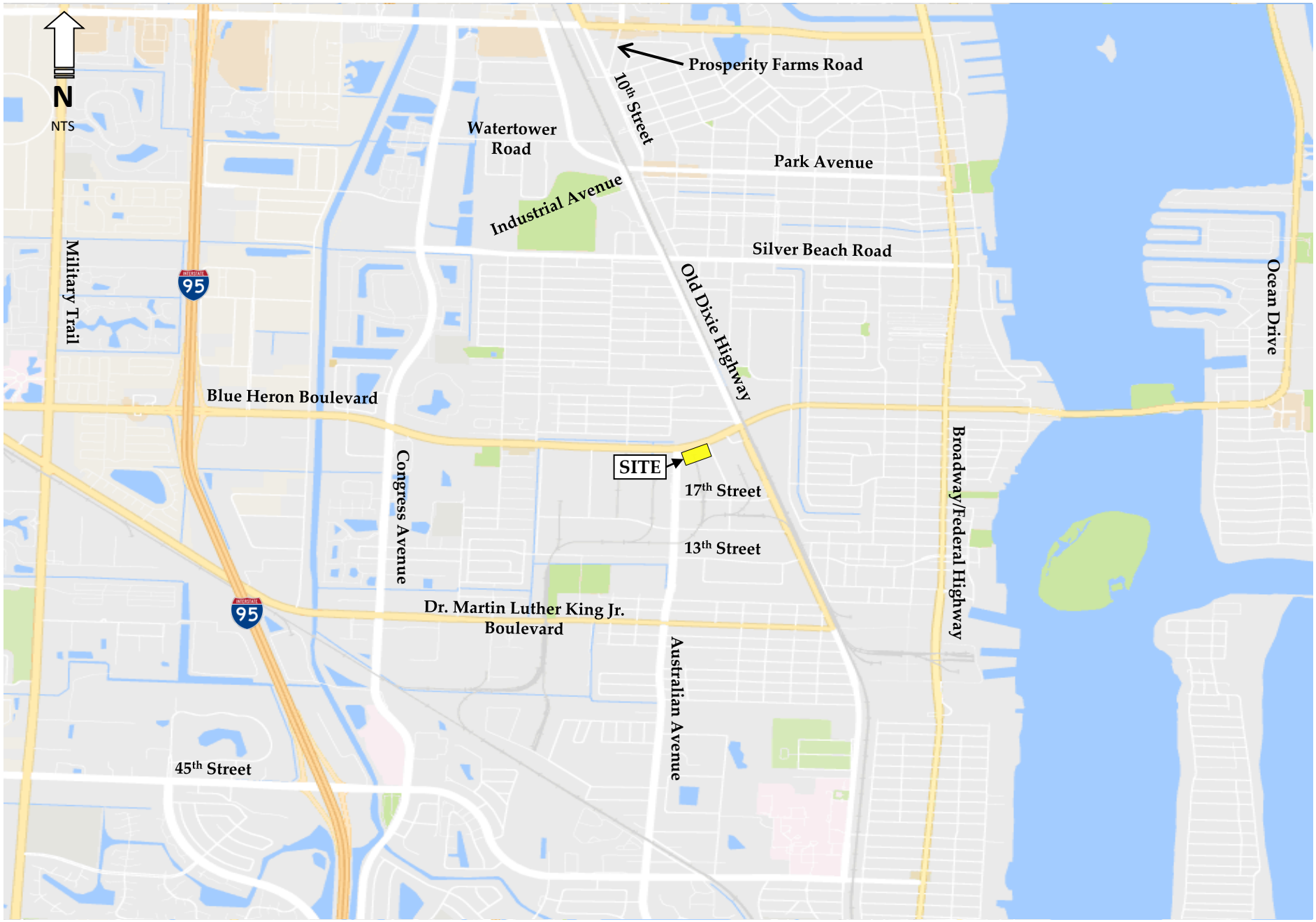

Figure 1
Site Location
Avenue L Retail Traffic Analysis
Riviera Beach, Florida

McMAHON
TRANSPORTATION ENGINEERS & PLANNERS

2.0 DATA

Roadway capacities and volumes were obtained from the TPS database and are included in **Appendix B**.

3.0 TRAFFIC VOLUME COMPONENTS

3.1 Background Traffic Growth

Background growth volumes were obtained from the TPS database, which calculates background traffic based on the higher volumes of two (2) methods. The first method includes traffic generated by committed developments, plus 1% regional growth. The second method uses the historic growth rates.

3.2 Project Trip Generation

Using information obtained from Palm Beach County, dated August 13, 2014, trip generation estimates were developed for the proposed uses. The site is currently vacant. The proposed development, with an anticipated buildout year of 2018, will include an 8,247 square foot variety store.

Table 1 summarizes the daily, AM peak hour and PM peak hour trips for the proposed use. The analysis indicates that the proposed development is anticipated to generate 201 net new daily trips, 12 net new AM peak hour trips, and 21 net new PM peak hour trips. The trip generation rates are attached in **Appendix C**.

3.3 Project Traffic Distribution

The distribution of project traffic was based on a review of the existing roadway characteristics, existing land uses, connectivity of the surrounding roadway network and historical average annual daily traffic (AADT) volumes. Further, there are existing Family Dollar stores located north of Blue Heron Boulevard along Congress Avenue and Broadway. These were considered in the project distribution. Driveway distributions were determined based on a review of available access to and from the site.

TABLE 1
TRIP GENERATION ANALYSIS
AVENUE L RETAIL TRAFFIC ANALYSIS

DAILY

LAND USE	ITE CODE	INTENSITY	TRIP GENERATION RATE [1]	IN	OUT	TOTAL TRIPS			INTERNAL TRIPS[1]				EXTERNAL TRIPS			PASS-BY[1]		NEW TRIPS		
						IN	OUT	TOTAL	IN	OUT	TOTAL	%	IN	OUT	TOTAL			IN	OUT	TOTAL
PROPOSED USES																				
Variety Store[2]	814	8,247 SF	T = 64.03 (X)	50%	50%	264	264	528	0	0	0	0.00%	264	264	528	327	62.00%	100	101	201
TOTAL						**264**	**264**	**528**	**0**	**0**	**0**		**264**	**264**	**528**	**327**		**100**	**101**	**201**

AM PEAK HOUR

LAND USE	ITE CODE	INTENSITY	TRIP GENERATION RATE [1]	IN	OUT	TOTAL TRIPS			INTERNAL TRIPS[1]				EXTERNAL TRIPS			PASS-BY[1]		NEW TRIPS		
						IN	OUT	TOTAL	IN	OUT	TOTAL	%	IN	OUT	TOTAL			IN	OUT	TOTAL
PROPOSED USES																				
Variety Store[2]	814	8,247 SF	T = 3.81 (X)	50%	50%	16	15	31	0	0	0	0.00%	16	15	31	19	62.00%	7	5	12
TOTAL						**16**	**15**	**31**	**0**	**0**	**0**		**16**	**15**	**31**	**19**		**7**	**5**	**12**

PM PEAK HOUR

LAND USE	ITE CODE	INTENSITY	TRIP GENERATION RATE [1]	IN	OUT	TOTAL TRIPS			INTERNAL TRIPS[1]				EXTERNAL TRIPS			PASS-BY[1]		NEW TRIPS		
						IN	OUT	TOTAL	IN	OUT	TOTAL	%	IN	OUT	TOTAL			IN	OUT	TOTAL
PROPOSED USES																				
Variety Store[2]	814	8,247 SF	T = 6.82 (X)	50%	50%	28	28	56	0	0	0	0.00%	28	28	56	35	62.00%	11	10	21
TOTAL						**28**	**28**	**56**	**0**	**0**	**0**		**28**	**28**	**56**	**35**		**11**	**10**	**21**

(1) Source: Palm Beach County Trip Generation Rates, August 13, 2014. Pass-by rate for Family Dollar based on Palm Beach County information for retail developments.

(2) Source: ITE Trip Generation Manual, 9th Edition. In and out splits during AM and PM peak hours consistent with daily as they are not available.

McMAHON TRANSPORTATION ENGINEERS & PLANNERS

The resulting general traffic distribution percentages include the following:

- Blue Heron Boulevard west of Australian Avenue: (30 percent)
- Blue Heron Boulevard east of Old Dixie Highway: (20 percent)
- Old Dixie Highway north of Blue Heron Boulevard: (20 percent)
- Old Dixie Highway south of 17th Street: (10 percent)
- Australian Avenue south of Blue Heron Boulevard: (20 percent)

Figure 2 graphically depicts the project traffic distribution. The trip distribution percentages were applied to the net new peak hour trip generation to determine the project assignments on each of the roadway links within the project radius of influence.

3.4 Future Total Traffic Projections

Future total traffic projections were calculated by adding background traffic and project trips.

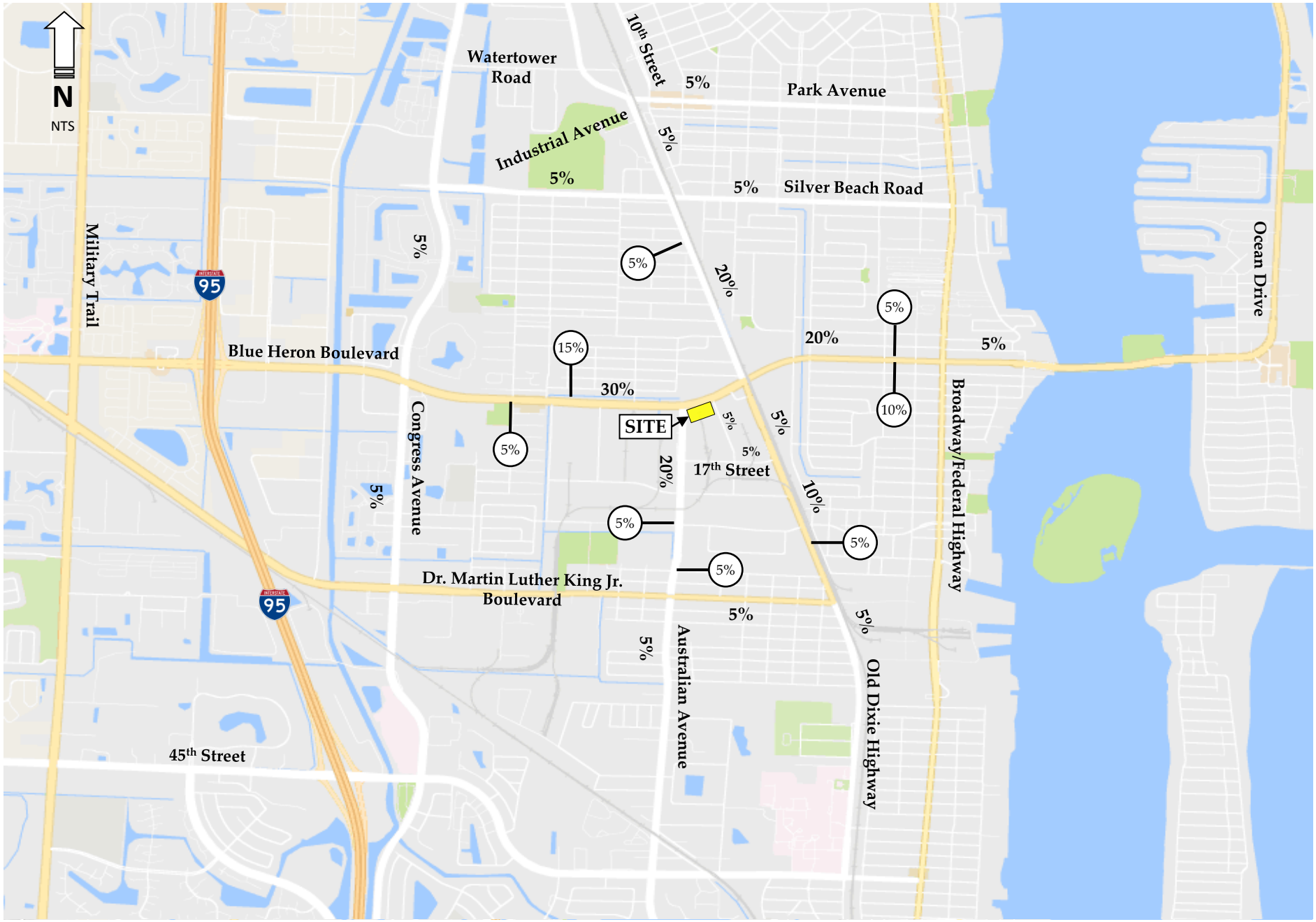

Figure 2
Project Net New Distribution
Avenue L Retail Traffic Analysis
Riviera Beach, Florida

McMAHON TRANSPORTATION ENGINEERS & PLANNERS

4.0 TRAFFIC PERFORMANCE STANDARDS

4.1 Radius of Influence

The proposed project will have a radius of influence of one-half (0.5) mile, based on the TPS requirements as defined in Article 12 of the Unified Land Development Code. **Figure 3** identifies the major thoroughfare roadways within the radius of influence.

4.2 Test One – Part One: Intersection Analysis

Future intersection analysis was not required to be completed as the project traffic is not significant on any roadway segment.

Therefore, the proposed development satisfies Test One, Part One of the Palm Beach County TPS.

4.3 Test One – Part Two: Roadway Links

Significance was determined for all major roadways within the project radius of influence. For those roadways determined to be significant, link and/or intersection capacity analyses were performed.

4.3.1 Significance

For links where the project traffic is expected to be five (5) percent or more of the Level of Service (LOS) D roadway link capacity threshold for I-95 and one (1) percent or more of the LOS D roadway link capacity threshold for all other roadways, the project will be considered significant on that link. **Table 2** and **Table 3** summarize the AM and PM peak hour significance analysis, respectively, for the roadway links within the radius of influence.

Results of the analysis indicate that no roadway segments are expected to be significant during AM and PM peak hour conditions.

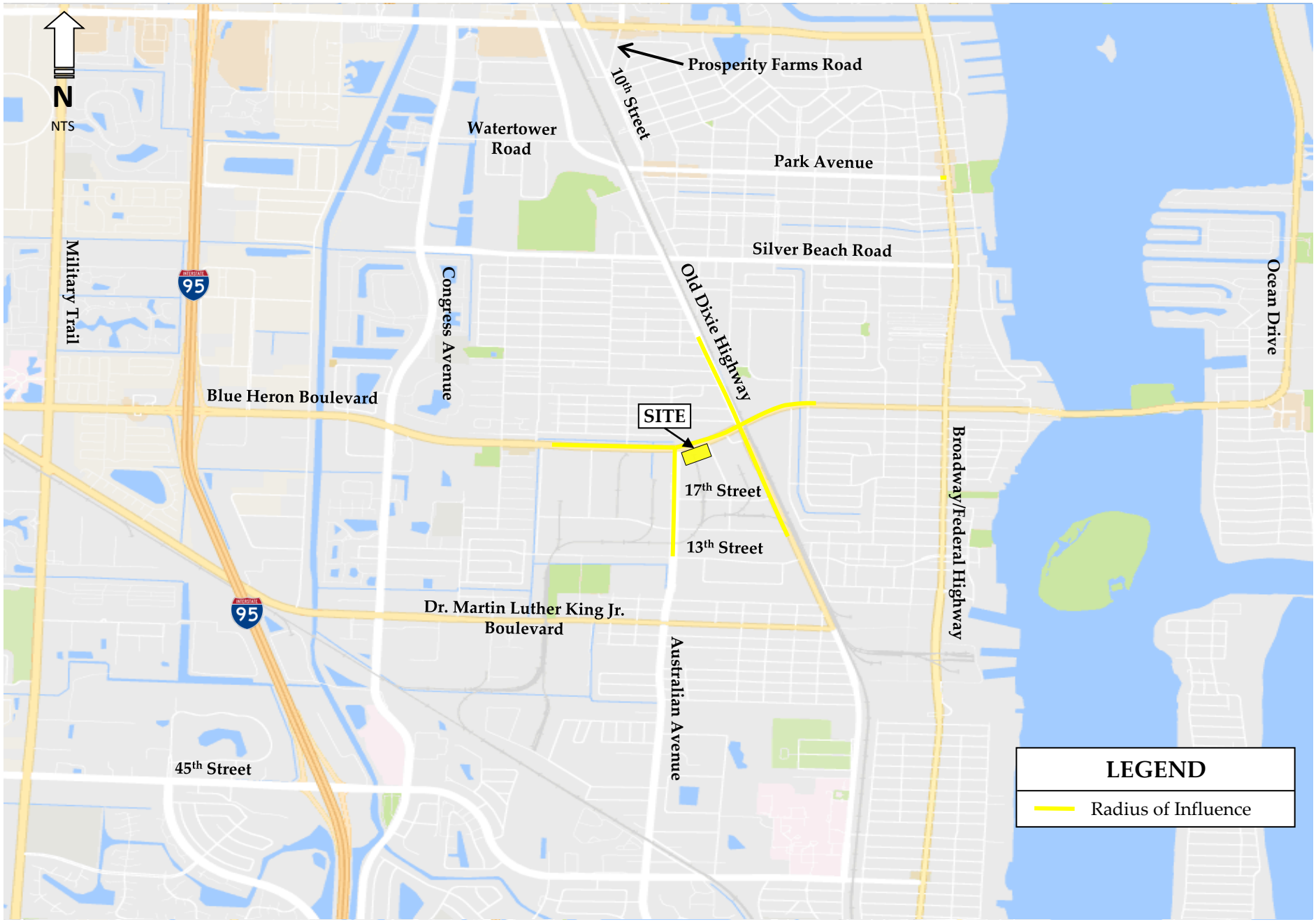

Figure 3
Radius of Influence
Avenue L Retail Traffic Analysis
Riviera Beach, Florida

McMAHON
TRANSPORTATION ENGINEERS & PLANNERS

TABLE 2
AM PEAK HOUR SIGNIFICANCE ANALYSIS - TEST 1
AVENUE L RETAIL TRAFFIC ANALYSIS

ROADWAY	FROM	TO	STATION NUMBER	FACILITY TYPE	DIR.	LOS "D" CAPACITY	INBOUND		OUTBOUND		TOTAL PROJECT TRIPS	PROJECT SIGNIFICANCE	SIGNIFICANT IMPACT?
							PROJECT DISTRIBUTION	TRIPS 7	PROJECT DISTRIBUTION	TRIPS 5			
North/South													
Australian Avenue	Blue Heron Boulevard	West Driveway	2834	4LD	NB	1,770	5%	0	15%	1	1	0.06%	No
					SB	1,770	0%	0	0%	0	0	0.00%	No
	West Driveway	17th Street	2834	4LD	NB	1,770	20%	1	0%	0	1	0.06%	No
					SB	1,770	0%	0	0%	0	0	0.00%	No
	17th Street	13th Street	2834	4LD	NB	1,770	20%	1	0%	0	1	0.06%	No
					SB	1,770	0%	0	20%	1	1	0.06%	No
	13th Street	Dr. Martin Luther King Jr. Boulevard	2834	4LD	NB	1,770	15%	1	0%	0	1	0.06%	No
					SB	1,770	0%	0	15%	1	1	0.06%	No
Old Dixie Highway	Silver Beach Road	Blue Heron Boulevard	2808	4LD	NB	1,960	0%	0	20%	1	1	0.05%	No
					SB	1,960	20%	1	0%	0	1	0.05%	No
	Blue Heron Boulevard	17th Street	2810	5L	NB	1,960	5%	0	0%	0	0	0.00%	No
					SB	1,960	0%	0	5%	0	0	0.00%	No
	17th Street	13th Street	2810	5L	NB	1,960	10%	1	0%	0	1	0.05%	No
					SB	1,960	0%	0	10%	1	1	0.05%	No
East/West													
Blue Heron Boulevard	Congress Avenue	Australian Avenue	2607	6LD	EB	2,680	30%	2	0%	0	2	0.07%	No
					WB	2,680	0%	0	30%	2	2	0.07%	No
	Australian Avenue	North Driveway	2823	6LD	EB	2,680	40%	3	0%	0	3	0.11%	No
					WB	2,680	5%	0	15%	1	1	0.04%	No
	North Driveway	Avenue L	2823	6LD	EB	2,680	0%	0	35%	2	2	0.07%	No
					WB	2,680	5%	0	15%	1	1	0.04%	No
	Avenue L	Old Dixie Highway	2823	6LD	EB	2,680	0%	0	60%	3	3	0.11%	No
					WB	2,680	45%	3	15%	1	4	0.15%	No
	Old Dixie Highway	Broadway/Federal Highway	2811	5L	EB	1,770	0%	0	20%	1	1	0.06%	No
					WB	1,770	20%	1	0%	0	1	0.06%	No
13th Street	Australian Avenue	Old Dixie Highway	0	2L	EB	810	0%	0	0%	0	0	0.00%	No
					WB	810	0%	0	0%	0	0	0.00%	No

McMAHON TRANSPORTATION ENGINEERS & PLANNERS

TABLE 3
PM PEAK HOUR SIGNIFICANCE ANALYSIS - TEST 1
AVENUE L RETAIL TRAFFIC ANALYSIS

ROADWAY	FROM	TO	STATION NUMBER	FACILITY TYPE	DIR.	LOS "D" CAPACITY	INBOUND		OUTBOUND		TOTAL PROJECT TRIPS	PROJECT SIGNIFICANCE	SIGNIFICANT IMPACT?
							PROJECT DISTRIBUTION	TRIPS 11	PROJECT DISTRIBUTION	TRIPS 10			
North/South													
Australian Avenue	Blue Heron Boulevard	West Driveway	2834	4LD	NB	1,770	5%	1	15%	2	3	0.17%	No
					SB	1,770	0%	0	0%	0	0	0.00%	No
	West Driveway	17th Street	2834	4LD	NB	1,770	20%	2	0%	0	2	0.11%	No
					SB	1,770	0%	0	0%	0	0	0.00%	No
	17th Street	13th Street	2834	4LD	NB	1,770	20%	2	0%	0	2	0.11%	No
					SB	1,770	0%	0	20%	2	2	0.11%	No
	13th Street	Dr. Martin Luther King Jr. Boulevard	2834	4LD	NB	1,770	15%	2	0%	0	2	0.11%	No
					SB	1,770	0%	0	15%	2	2	0.11%	No
Old Dixie Highway	Silver Beach Road	Blue Heron Boulevard	2808	4LD	NB	1,960	0%	0	20%	2	2	0.10%	No
					SB	1,960	20%	2	0%	0	2	0.10%	No
	Blue Heron Boulevard	17th Street	2810	5L	NB	1,960	5%	1	0%	0	1	0.05%	No
					SB	1,960	0%	0	5%	1	1	0.05%	No
	17th Street	13th Street	2810	5L	NB	1,960	10%	1	0%	0	1	0.05%	No
					SB	1,960	0%	0	10%	1	1	0.05%	No
East/West													
Blue Heron Boulevard	Congress Avenue	Australian Avenue	2607	6LD	EB	2,680	30%	3	0%	0	3	0.11%	No
					WB	2,680	0%	0	30%	3	3	0.11%	No
	Australian Avenue	North Driveway	2823	6LD	EB	2,680	40%	4	0%	0	4	0.15%	No
					WB	2,680	5%	1	15%	2	3	0.11%	No
	North Driveway	Avenue L	2823	6LD	EB	2,680	0%	0	35%	4	4	0.15%	No
					WB	2,680	5%	1	15%	2	3	0.11%	No
	Avenue L	Old Dixie Highway	2823	6LD	EB	2,680	0%	0	60%	6	6	0.22%	No
					WB	2,680	45%	5	15%	2	7	0.26%	No
	Old Dixie Highway	Broadway/Federal Highway	2811	5L	EB	1,770	0%	0	20%	2	2	0.11%	No
					WB	1,770	20%	2	0%	0	2	0.11%	No
13th Street	Australian Avenue	Old Dixie Highway	0	2L	EB	810	0%	0	0%	0	0	0.00%	No
					WB	810	0%	0	0%	0	0	0.00%	No

McMAHON TRANSPORTATION ENGINEERS & PLANNERS

4.3.2 Link Capacity Analysis

For links where the project traffic is significant, the total future traffic at buildout (2018) was evaluated to determine if the roadway LOS D capacity would accommodate the projected volumes. Project traffic is not expected to be significant on any link, therefore, link capacity analysis is not required.

4.4 Test Two – Five-Year Analysis

Test Two considers the five-year analysis. Significance was determined for all major roadways within the project radius of influence. For those roadways determined to be significant, link and/or intersection capacity analyses were performed in accordance with Article 12.

4.4.1 Significance

The LOS standard for Test Two is LOS E. For links where the project traffic will be five (5) percent or more of the LOS E roadway link capacity threshold for I-95 and three (3) percent or more of the LOS E roadway link capacity threshold for all other roadways, the project will be considered significant on that link. **Table 4** and **Table 5** summarize the significance analysis for AM and PM peak hour conditions, respectively. Results of the analysis indicate that no roadway segments are expected to be significant during AM and PM peak hour conditions.

4.4.2 Link Capacity Analysis

For links where the project traffic is significant, the total future traffic for Year 2021 was evaluated to determine if the roadway LOS E capacity would accommodate the projected volumes. Project traffic is not expected to be significant on any link; therefore, link capacity analysis is not required.

TABLE 4
AM PEAK HOUR SIGNIFICANCE ANALYSIS - TEST 2
AVENUE L RETAIL TRAFFIC ANALYSIS

ROADWAY	FROM	TO	STATION NUMBER	FACILITY TYPE	DIR.	LOS "E" CAPACITY	INBOUND		OUTBOUND		TOTAL PROJECT TRIPS	PROJECT SIGNIFICANCE	SIGNIFICANT IMPACT?
							PROJECT DISTRIBUTION	TRIPS 7	PROJECT DISTRIBUTION	TRIPS 5			
North/South													
Australian Avenue	Blue Heron Boulevard	West Driveway	2834	4LD	NB	1,870	5%	0	15%	1	1	0.05%	No
					SB	1,870	0%	0	0%	0	0	0.00%	No
	West Driveway	17th Street	2834	4LD	NB	1,870	20%	1	0%	0	1	0.05%	No
					SB	1,870	0%	0	0%	0	0	0.00%	No
	17th Street	13th Street	2834	4LD	NB	1,870	20%	1	0%	0	1	0.05%	No
					SB	1,870	0%	0	20%	1	1	0.05%	No
	13th Street	Dr. Martin Luther King Jr. Boulevard	2834	4LD	NB	1,870	15%	1	0%	0	1	0.05%	No
					SB	1,870	0%	0	15%	1	1	0.05%	No
Old Dixie Highway	Silver Beach Road	Blue Heron Boulevard	2808	4LD	NB	1,960	0%	0	20%	1	1	0.05%	No
					SB	1,960	20%	1	0%	0	1	0.05%	No
	Blue Heron Boulevard	17th Street	2810	5L	NB	1,960	5%	0	0%	0	0	0.00%	No
					SB	1,960	0%	0	5%	0	0	0.00%	No
	17th Street	13th Street	2810	5L	NB	1,960	10%	1	0%	0	1	0.05%	No
					SB	1,960	0%	0	10%	1	1	0.05%	No
East/West													
Blue Heron Boulevard	Congress Avenue	Australian Avenue	2607	6LD	EB	2,830	30%	2	0%	0	2	0.07%	No
					WB	2,830	0%	0	30%	2	2	0.07%	No
	Australian Avenue	North Driveway	2823	6LD	EB	2,830	40%	3	0%	0	3	0.11%	No
					WB	2,830	5%	0	15%	1	1	0.04%	No
	North Driveway	Avenue L	2823	6LD	EB	2,830	0%	0	35%	2	2	0.07%	No
					WB	2,830	5%	0	15%	1	1	0.04%	No
	Avenue L	Old Dixie Highway	2823	6LD	EB	2,830	0%	0	60%	3	3	0.11%	No
					WB	2,830	45%	3	15%	1	4	0.14%	No
	Old Dixie Highway	Broadway/Federal Highway	2811	5L	EB	1,870	0%	0	20%	1	1	0.05%	No
					WB	1,870	20%	1	0%	0	1	0.05%	No
13th Street	Australian Avenue	Old Dixie Highway	0	2L	EB	860	0%	0	0%	0	0	0.00%	No
					WB	860	0%	0	0%	0	0	0.00%	No

TABLE 5
PM PEAK HOUR SIGNIFICANCE ANALYSIS - TEST 2
AVENUE L RETAIL TRAFFIC ANALYSIS

ROADWAY	FROM	TO	STATION NUMBER	FACILITY TYPE	DIR.	LOS "E" CAPACITY	INBOUND		OUTBOUND		TOTAL PROJECT TRIPS	PROJECT SIGNIFICANCE	SIGNIFICANT IMPACT?
							PROJECT DISTRIBUTION	TRIPS 11	PROJECT DISTRIBUTION	TRIPS 10			
North/South													
Australian Avenue	Blue Heron Boulevard	West Driveway	2834	4LD	NB	1,870	5%	1	15%	2	3	0.16%	No
					SB	1,870	0%	0	0%	0	0	0.00%	No
	West Driveway	17th Street	2834	4LD	NB	1,870	20%	2	0%	0	2	0.11%	No
					SB	1,870	0%	0	0%	0	0	0.00%	No
	17th Street	13th Street	2834	4LD	NB	1,870	20%	2	0%	0	2	0.11%	No
					SB	1,870	0%	0	20%	2	2	0.11%	No
	13th Street	Dr. Martin Luther King Jr. Boulevard	2834	4LD	NB	1,870	15%	2	0%	0	2	0.11%	No
					SB	1,870	0%	0	15%	2	2	0.11%	No
Old Dixie Highway	Silver Beach Road	Blue Heron Boulevard	2808	4LD	NB	1,960	0%	0	20%	2	2	0.10%	No
					SB	1,960	20%	2	0%	0	2	0.10%	No
	Blue Heron Boulevard	17th Street	2810	5L	NB	1,960	5%	1	0%	0	1	0.05%	No
					SB	1,960	0%	0	5%	1	1	0.05%	No
	17th Street	13th Street	2810	5L	NB	1,960	10%	1	0%	0	1	0.05%	No
					SB	1,960	0%	0	10%	1	1	0.05%	No
East/West													
Blue Heron Boulevard	Congress Avenue	Australian Avenue	2607	6LD	EB	2,830	30%	3	0%	0	3	0.11%	No
					WB	2,830	0%	0	30%	3	3	0.11%	No
	Australian Avenue	North Driveway	2823	6LD	EB	2,830	40%	4	0%	0	4	0.14%	No
					WB	2,830	5%	1	15%	2	3	0.11%	No
	North Driveway	Avenue L	2823	6LD	EB	2,830	0%	0	35%	4	4	0.14%	No
					WB	2,830	5%	1	15%	2	3	0.11%	No
	Avenue L	Old Dixie Highway	2823	6LD	EB	2,830	0%	0	60%	6	6	0.21%	No
					WB	2,830	45%	5	15%	2	7	0.25%	No
	Old Dixie Highway	Broadway/Federal Highway	2811	5L	EB	1,870	0%	0	20%	2	2	0.11%	No
					WB	1,870	20%	2	0%	0	2	0.11%	No
13th Street	Australian Avenue	Old Dixie Highway	0	2L	EB	860	0%	0	0%	0	0	0.00%	No
					WB	860	0%	0	0%	0	0	0.00%	No

McMAHON TRANSPORTATION ENGINEERS & PLANNERS

5.0 DRIVEWAY ANALYSIS

The proposed development will be served by one (1) right-in/right-out driveway connection along Blue Heron Boulevard and one (1) full access driveway connection along Avenue L. The proposed project net new traffic distribution at the driveway connections and adjacent intersections is graphically shown on **Figure 4**. The project pass-by traffic distribution at the driveway connections is graphically shown on **Figure 5**. The resulting driveway net new, pass-by and total volumes are shown on **Figure 6**, **Figure 7**, and **Figure 8**, respectively. A Florida Department of Transportation (FDOT) pre-approval letter for the proposed access onto Blue Heron Boulevard is attached in **Appendix D**.

The projected right turns at the proposed Blue Heron Boulevard driveway connection were compared against FDOT guidelines for the requirement of an exclusive right-turn lane. Based on the anticipated right turn volume on Blue Heron Boulevard, an exclusive right-turn lane is not required.

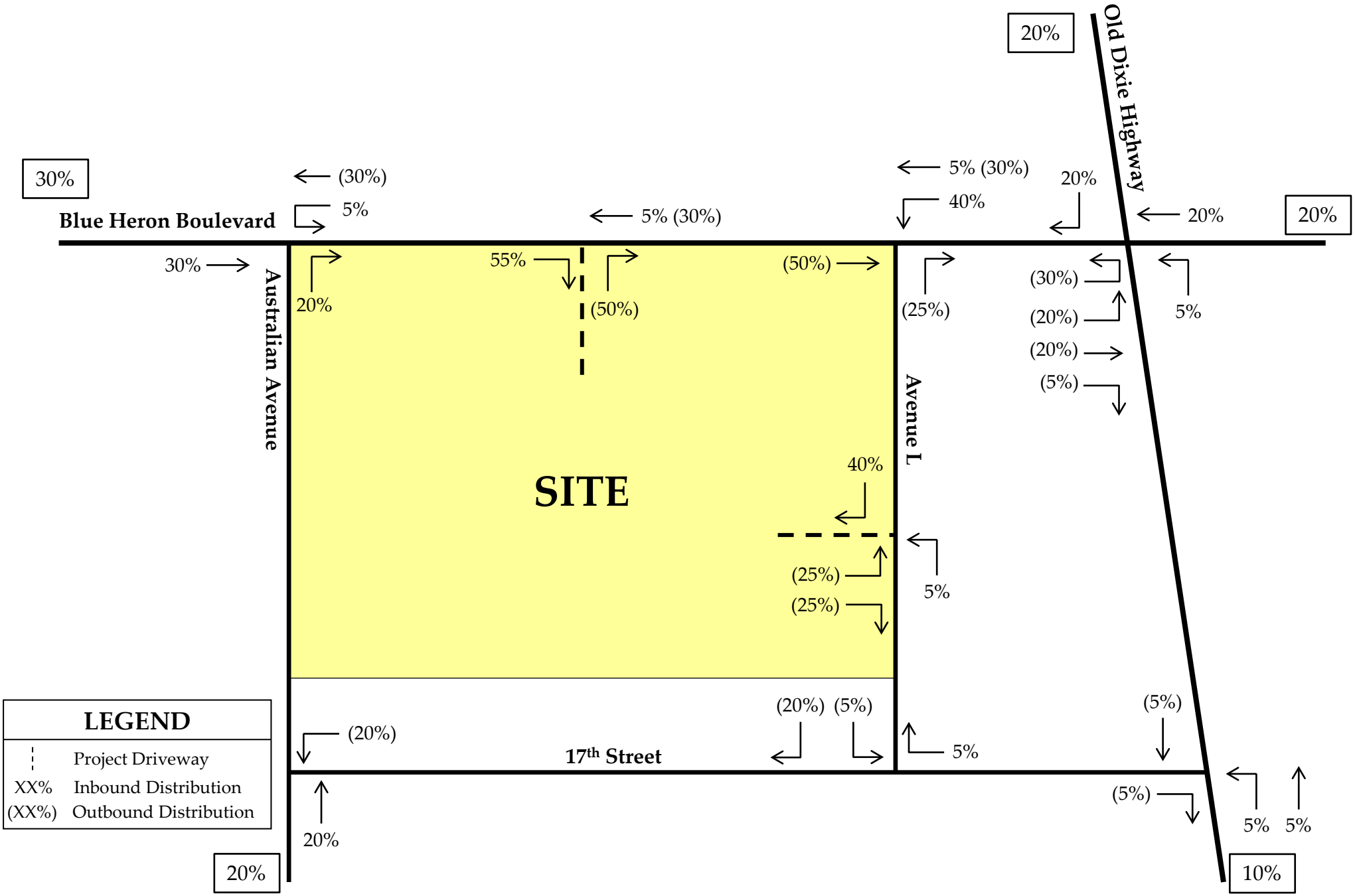

Figure 4
Project Net New Distribution – Driveways and Adjacent Intersections
Avenue L Retail Traffic Analysis
Riviera Beach, Florida

McMAHON TRANSPORTATION ENGINEERS & PLANNERS

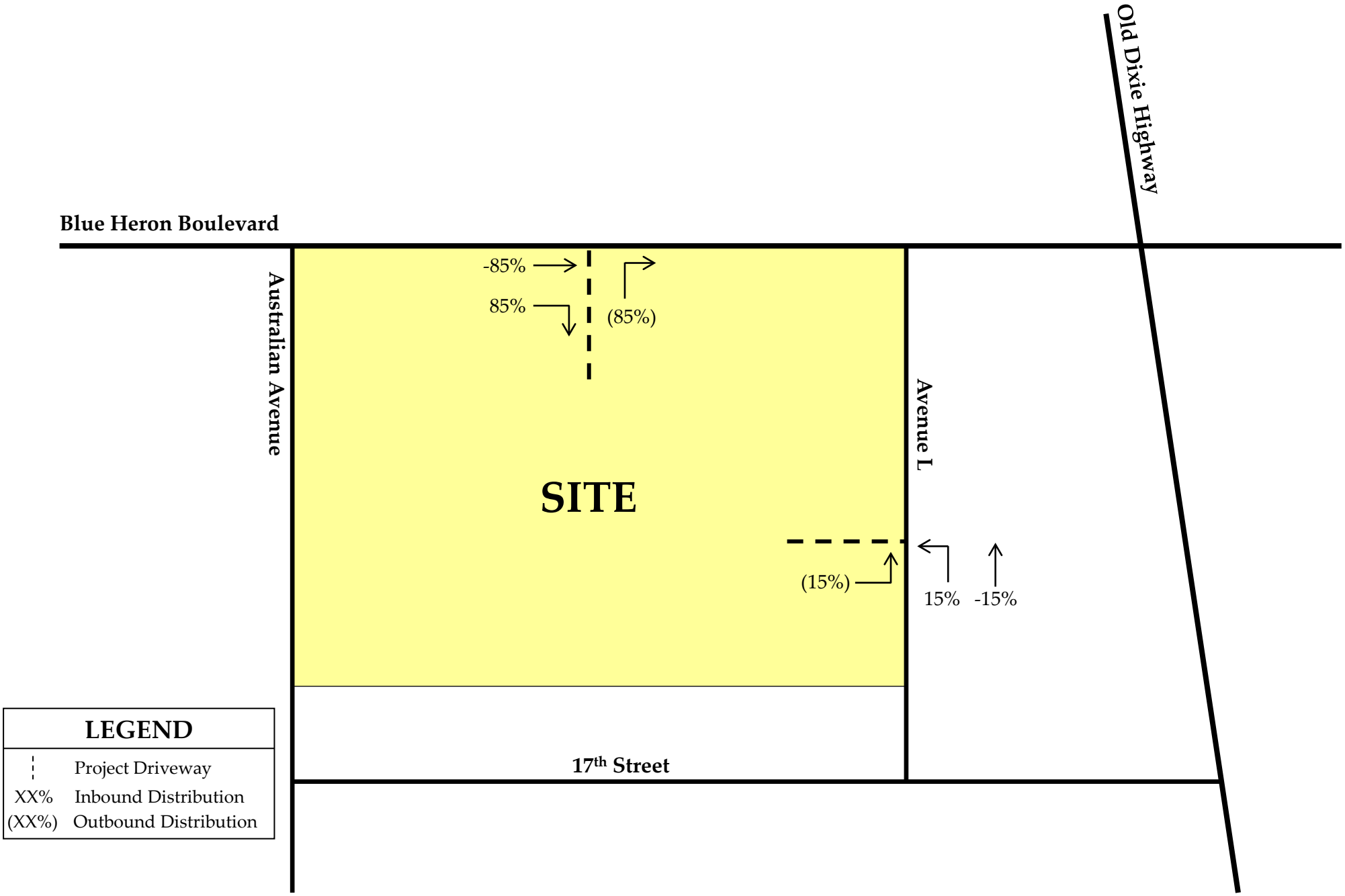

Figure 5
Project Pass-By Distribution – Driveways
Avenue L Retail Traffic Analysis
Riviera Beach, Florida

McMAHON TRANSPORTATION ENGINEERS & PLANNERS

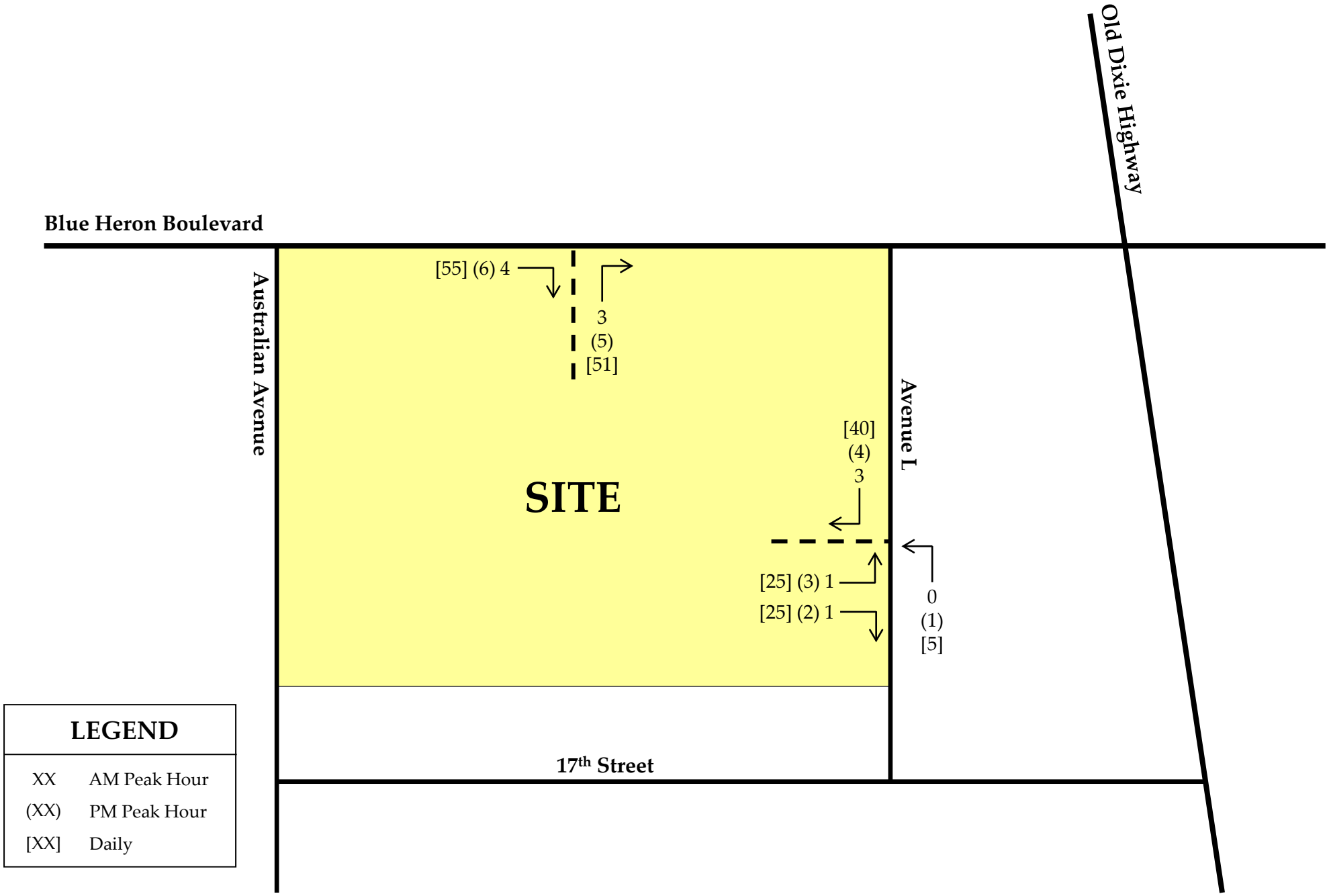

Figure 6
Project Assignment – Net New
Avenue L Retail Traffic Analysis
Riviera Beach, Florida

McMAHON TRANSPORTATION ENGINEERS & PLANNERS

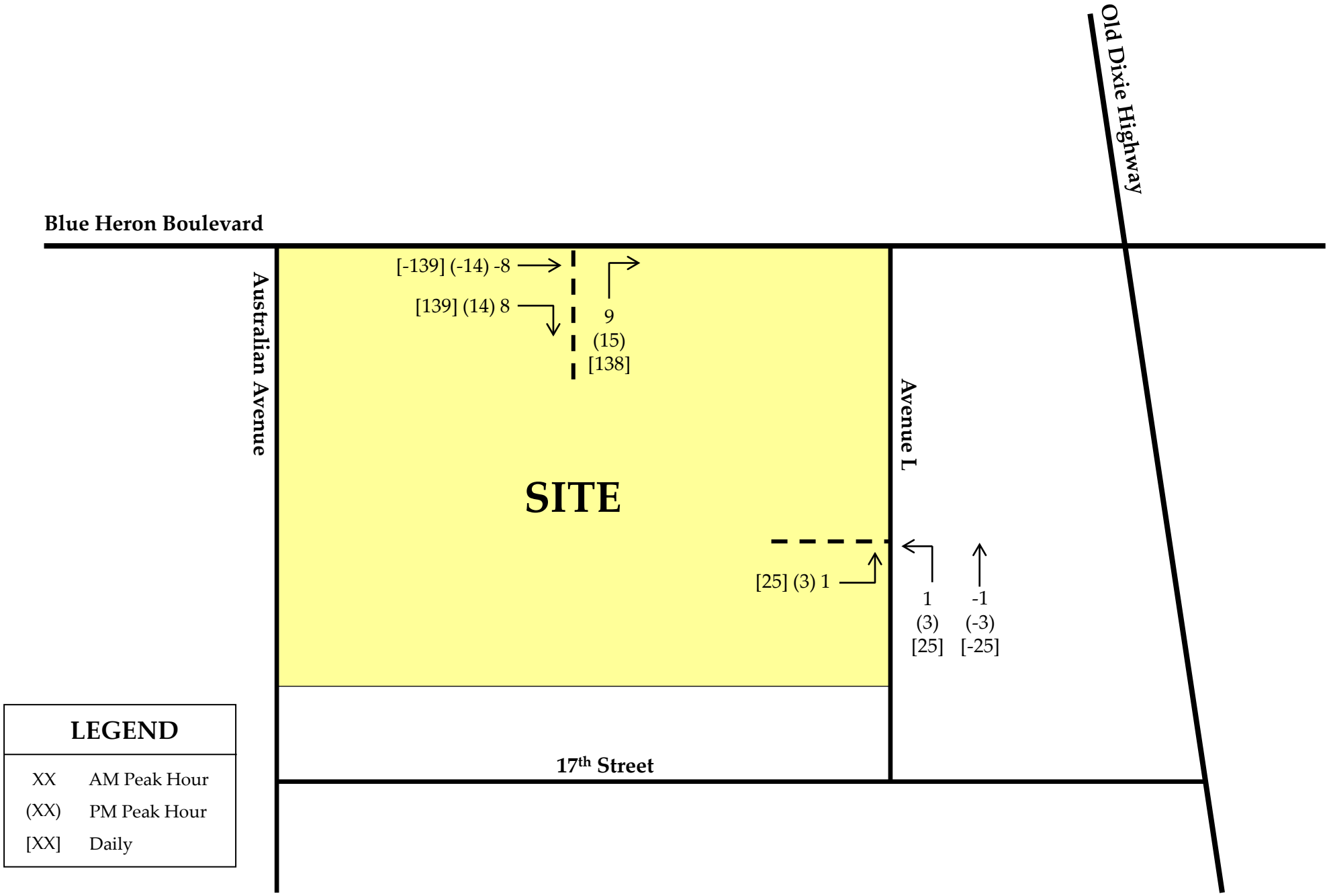

Figure 7
Project Assignment – Pass-By
Avenue L Retail Traffic Analysis
Riviera Beach, Florida

McMAHON TRANSPORTATION ENGINEERS & PLANNERS

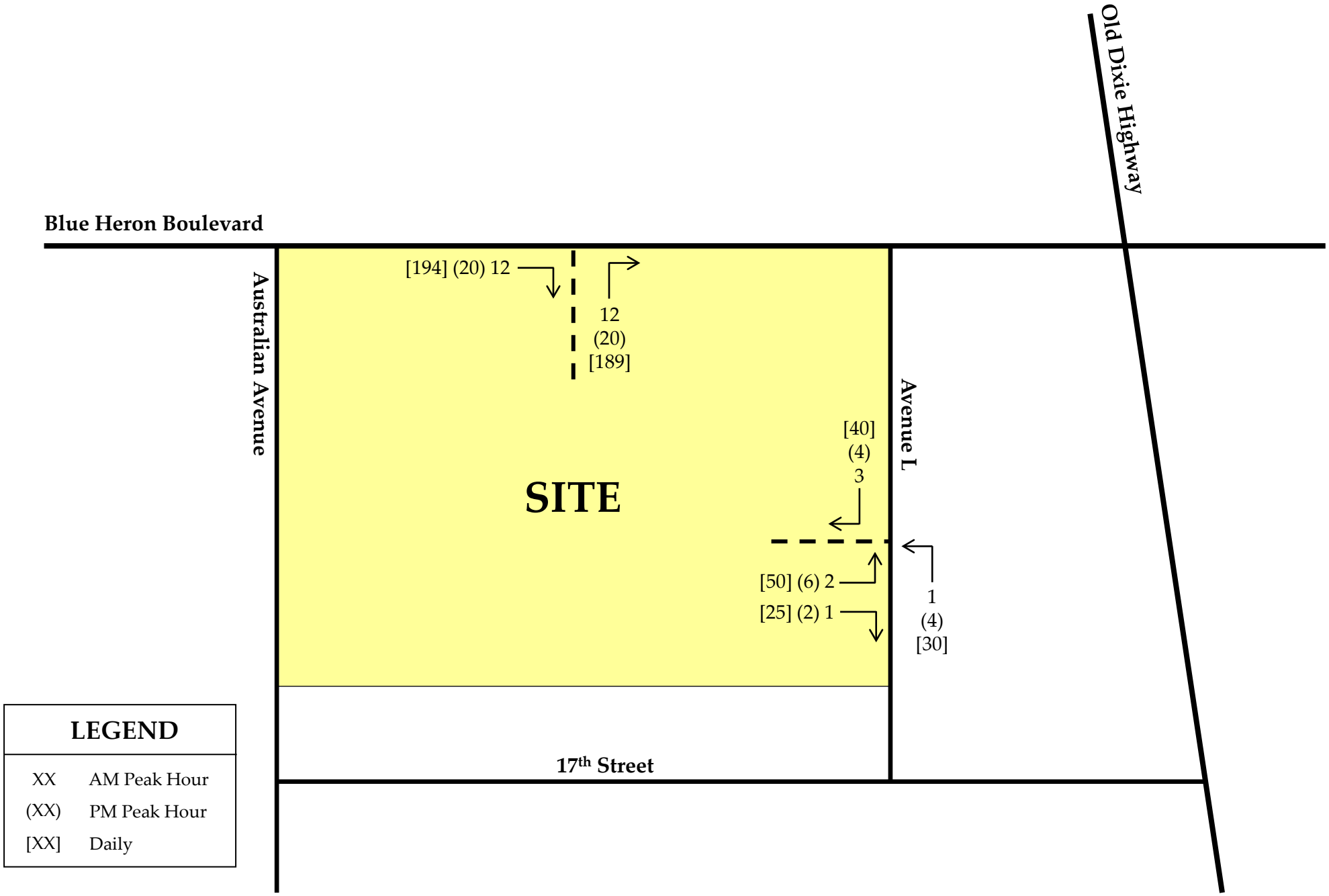

Figure 8
Project Assignment – Total
Avenue L Retail Traffic Analysis
Riviera Beach, Florida

McMAHON TRANSPORTATION ENGINEERS & PLANNERS

6.0 CONCLUSION

McMahon has analyzed the potential traffic analysis associated with the development of a parcel located on the southwest corner of Blue Heron Boulevard and Avenue L, in the City of Riviera Beach. The site is currently vacant. The proposed development, with an anticipated buildout year of 2018, will include an 8,247 square foot variety store.

The analysis indicates that this project meets all of the test requirements of the Palm Beach County TPS.

F:\FL\15578M_EQUITAS_AvenueLRetail\15578M_01\Report\Avenue L Retail\Revised_February2017\Rpt_120716.doc

APPENDIX A

SITE PLAN

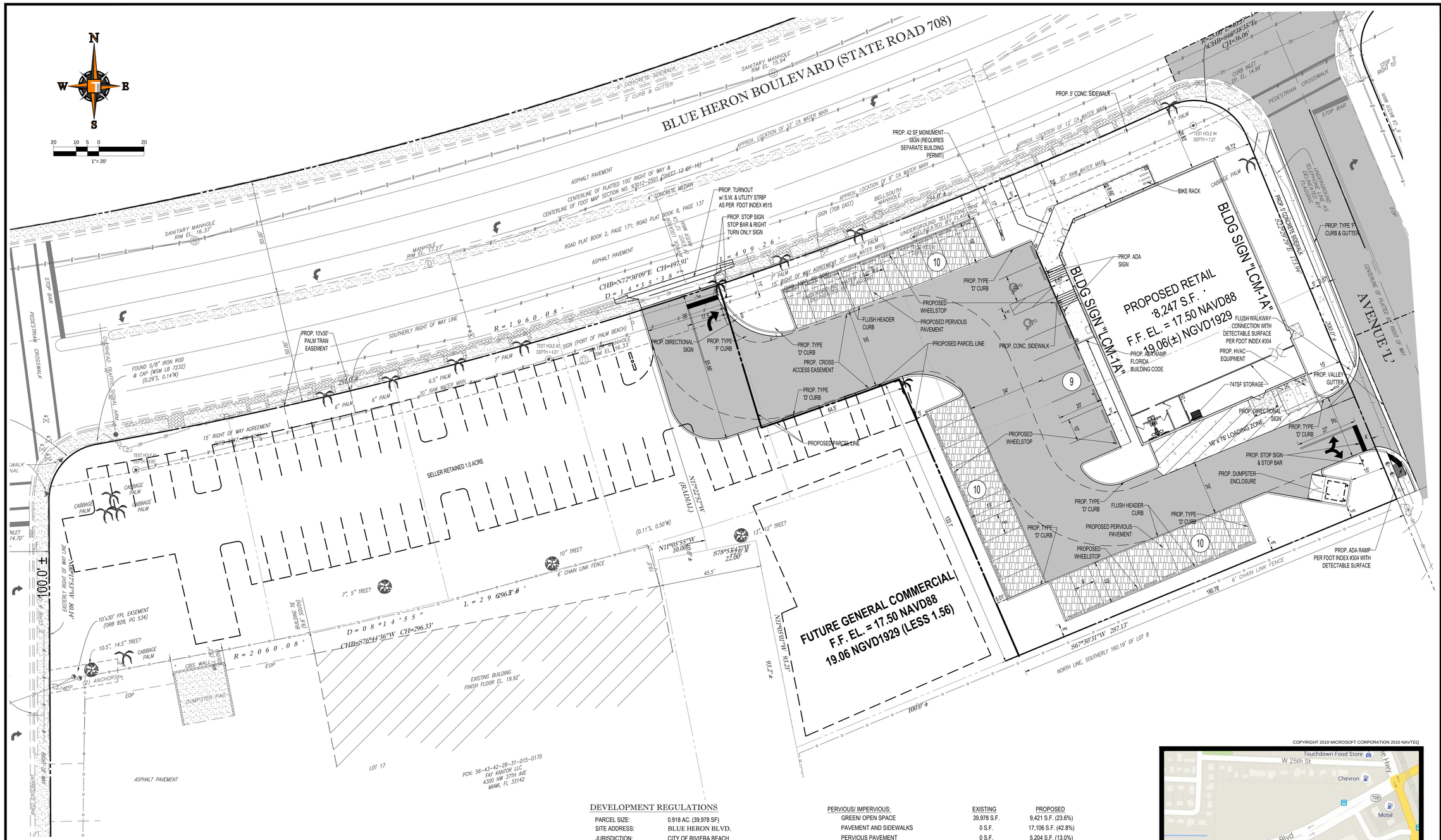

DEVELOPMENT REGULATIONS

PARCEL SIZE:	0.918 AC. (39,978 SF)
SITE ADDRESS:	BLUE HERON BLVD.
JURISDICTION:	CITY OF RIVIERA BEACH
ZONING DISTRICT:	CG - GENERAL COMMERCIAL DISTRICT
FUTURE LAND USE:	COMMERCIAL
FOLIO:	56-43-42-28-31-0150010
EXISTING USE:	VACANT
PROPOSED USE:	RETAIL

BUILDING SETBACKS:	REQUIRED	PROPOSED
MIN LOT AREA	10,000 S.F.	39,978 S.F.
MIN LOT WIDTH	100 FT	240 FT
MAXIMUM BUILDING HEIGHT	65 FT	TBD
FRONT SETBACK	20 FT	20 FT
SIDE STREET SETBACK	15 FT	15 FT
SIDE SETBACK	0 FT	N/A
REAR SETBACK	0 FT	5'

PERVIOUS/ IMPERVIOUS:	EXISTING	PROPOSED
GREEN/ OPEN SPACE	39,978 S.F.	9,421 S.F. (23.6%)
PAVEMENT AND SIDEWALKS	0 S.F.	17,106 S.F. (42.8%)
PERVIOUS PAVEMENT	0 S.F.	5,204 S.F. (13.0%)
BUILDING	0 S.F.	8,247 S.F. (20.6%)

	REQUIRED	PROPOSED
LANDSCAPE AREA (31-609)	20%	36.6%
PARKING LOT SETBACK FROM STREET	10 FEET	10 FEET
PARKING LOT SETBACK PROPERTY	5 FEET	5 FEET

PARKING REQUIRED:		
PARKING STALL DIMENSION	9' x 19'	10' x 20'
MIN. DRIVE AISLE WIDTH	24 FEET	24 FEET
PARKING STALLS		
RETAIL 7,493SF (1 : 200 RETAIL)	37	
STORAGE 754SF (1:1000 WAREHOUSE)	1	
PARKING PROVIDED	39	
LOADING SPACE	(1) 12' x 30'	(1) 16' x 60'

HATCH LEGEND

PROPOSED ASPHALT PAVEMENT

SHARED EASEMENT ACCESS

PROPOSED CONCRETE

LEGAL DESCRIPTION:

LOTS 1 THROUGH 7, AND ALL OF LOT 8, LESS THE SOUTHERLY 160.19 FEET THEREOF, IN BLOCK 'O', OF REPLAT OF PLAT NO. 1, LEWIS TERMINALS, ACCORDING TO THE PLAT THEREOF, AS RECORDED IN PLAT BOOK 27, PAGE 39, OF THE PUBLIC RECORDS OF PALM BEACH COUNTY, FLORIDA.
BEING MORE PARTICULARLY DESCRIBED AS FOLLOWS:
BEGIN AT THE SOUTHWEST CORNER OF SAID LOT 1, BEING THE INTERSECTION OF THE EAST RIGHT OF WAY LINE OF AUSTRALIAN AVENUE AND THE SOUTH LINE OF SAID LOT 1; THENCE NORTH 00°17'53" WEST, ALONG SAID EAST RIGHT OF WAY LINE, A DISTANCE OF 80.11 FEET TO THE BEGINNING OF A CIRCULAR CURVE CONCAVE TO THE SOUTHEAST, HAVING A RADIUS OF 25.00 FEET, A CENTRAL ANGLE OF 80°05'51", A CHORD BEARING OF NORTH 39°45'02" EAST AND A CHORD DISTANCE OF 32.17 FEET; THENCE RUN NORTHEASTERLY ALONG THE ARC OF SAID CURVE, A DISTANCE OF 34.95 FEET TO A POINT OF REVERSE CURVATURE OF A CIRCULAR CURVE CONCAVE TO THE NORTHWEST, HAVING A RADIUS OF 1960.08 FEET, A CENTRAL ANGLE OF 14°35'38", A CHORD BEARING OF NORTH 72°30'09" EAST, AND A CHORD DISTANCE OF 497.91 FEET; THENCE RUN NORTHEASTERLY ALONG THE ARC OF SAID CURVE, A DISTANCE OF 499.26 FEET TO A POINT OF REVERSE CURVATURE OF A CIRCULAR CURVE CONCAVE TO THE SOUTHWEST, HAVING A RADIUS OF 25.00 FEET, A CENTRAL ANGLE OF 92°18'12", A CHORD BEARING OF SOUTH 68°38'35" EAST, AND A CHORD DISTANCE OF 36.06 FEET; THENCE RUN SOUTHEASTERLY ALONG THE ARC OF SAID CURVE, A DISTANCE OF 40.27 FEET TO A POINT OF TANGENCY ALONG THE WESTERLY RIGHT OF WAY LINE OF AVENUE 'L'; THENCE SOUTH 22°29'29" EAST, A DISTANCE OF 173.94 FEET TO A POINT ON THE NORTH LINE OF THE SOUTHERLY 160.19 FEET OF SAID LOT 8; THENCE SOUTH 67°30'31" WEST, ALONG SAID NORTH LINE, A DISTANCE OF 287.13 FEET TO A POINT ON THE EASTERLY LINE OF A 44 FOOT RAILROAD RIGHT OF WAY LINE; THENCE NORTH 11°05'01" WEST, ALONG SAID EAST LINE, A DISTANCE OF 93.21 FEET; THENCE SOUTH 78°53'47" WEST, A DISTANCE OF 22.00 FEET; THENCE NORTH 11°05'55" WEST, A DISTANCE OF 10.00 FEET TO A POINT ON THE SOUTH LINE OF SAID LOT 4, SAID POINT ALSO BEING ON AN ARC OF A CIRCULAR CURVE CONCAVE TO THE NORTHWEST TO WHICH A RADIAL LINE BEARS NORTH 17°22'52" WEST, HAVING A RADIUS OF 2060.08 FEET, A CENTRAL ANGLE OF 08°14'55" WEST, A CHORD BEARING OF SOUTH 76°44'36" WEST AND A CHORD DISTANCE OF 296.33 FEET; THENCE RUN SOUTHWESTERLY ALONG THE ARC OF SAID CURVE, A DISTANCE OF 296.58 FEET TO THE POINT OF BEGINNING.

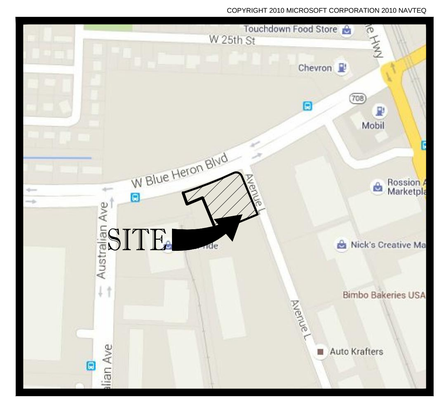

LOCATION MAP

THOMAS ENGINEERING GROUP
CIVIL ENGINEERS · PROJECT MANAGERS · LAND PLANNING · LANDSCAPE ARCHITECTS
1000 CORPORATE DR. SUITE 250 FORT LAUDERDALE, FL 33334 P: 954-202-7000
4950 W. KENNEDY BLVD. SUITE 603 TAMPA, FL 33609 P: 813-379-4100
125 W INDIANTOWN RD. SUITE 206 JUPITER, FL 33458 P: 561-203-7503

THE INFORMATION, DESIGN, AND CONTENT OF THIS PLAN ARE PROPRIETARY AND SHALL NOT BE COPIED OR USED FOR ANY PURPOSE WITHOUT PRIOR WRITTEN AUTHORIZATION FROM THOMAS ENGINEERING GROUP, LLC. ONLY APPROVED, SIGNED AND SEALED PLANS SHALL BE UTILIZED FOR CONSTRUCTION PURPOSES.

REVISIONS:

REV:	DATE:	COMMENT:	BY:

811 KNOW WHAT'S BELOW ALWAYS CALL 811 BEFORE YOU DIG
It's fast. It's free. It's the law.
www.callsunshine.com

PROJECT No.:	FJ150025
DRAWN BY:	RFJ
CHECKED BY:	JMG
DATE:	04/19/16
CAD I.D.:	FJ150025-SITE PLAN

PROJECT:

AVENUE L RETAIL

FOR

EQUITAS

BLUE HERON BLVD. & AVENUE L
RIVIERA BEACH,
FLORIDA

THOMAS ENGINEERING GROUP
RADICE III
1000 CORPORATE DRIVE, SUITE 250
FORT LAUDERDALE, FL 33334
PH: (954) 202-7000
FX: (954) 202-7070
www.ThomasEngineeringGroup.com

JASON M. GUNTHER
PROFESSIONAL ENGINEER
January 30, 2017
FLORIDA LICENSE No. 58629
FLORIDA BUSINESS CERT. OF AUTH. No. 27528

SHEET TITLE:

SITE PLAN

SHEET NUMBER:

C-03

Printed on Monday, January 30, 2017, 11:37 AM by Shirley Gomez

APPENDIX B

PALM BEACH COUNTY VOLUME DATA

Input Data

ROAD NAME:	Australian Ave	STATION:	2834	Report Created: 11/22/2016
CURRENT YEAR:	2016	FROM:	Dr Martin Luther King Jr Blvd	
ANALYSIS YEAR:	2018	TO:	Midpoint	
GROWTH RATE:	27.57%	COUNT DATE:	1/25/2016	
		PSF:	1	

Link Analysis

Time Period	AM			PM		
Direction	2-way	NB/EB	SB/WB	2-way	NB/EB	SB/WB
Existing Volume	2334	1026	1414	2291	1476	888
Peak Volume	2334	1026	1414	2291	1476	888
Diversion(%)	0	0	0	0	0	0
Volume after Diversion	2334	1026	1414	2291	1476	888

Committed Developments							Type	% Complete
Lake Shore Apartment	0	0	0	0	0	0	Res	100%
Wal-Mart # 3348	0	0	0	0	0	0	NR	100%
Sierra Bay Apartments	0	0	0	0	0	0	Res	100%
EZ Weld	3	2	0	3	1	3	NR	0%
JFK Middle School	0	0	0	0	0	0	NR	100%
Majestic Plaza Lots 6-8	3	1	3	4	3	1	NR	74%
Lewis Terminal	0	0	0	0	0	0	NR	100%
Riviera Beach Recycling	1	0	1	2	1	1	NR	0%
Palm Beach Outlets	4	2	3	10	5	5	NR	72%
Sun Coast High School	0	0	0	0	0	0	NR	100%
Blue Heron/Australian Office	10	9	2	14	3	11	NR	0%
Public Safety & Public Works Complex	33	28	5	35	11	24	NR	30%
7-Eleven Blue Heron	5	2	2	4	2	2	NR	0%
Champs Charter School	1	1	1	1	0	0	NR	0%
Tropical Shipping	4	1	4	11	9	2	NR	62%
7-Eleven-2100 45th St.	3	1	2	9	5	4	NR	66%
WAWA - Blue Heron & Garden	1	1	1	1	1	1	NR	78%
7-Eleven	19	9	9	19	9	10	NR	35%
Total Committed Developments	87	57	33	113	50	64		
Total Committed Residential	0	0	0	0	0	0		
Total Committed Non-Residential	87	57	33	113	50	64		
Double Count Reduction	0	0	0	0	0	0		
Total Discounted Committed Developments	87	57	33	113	50	64		
Historical Growth	1464	644	887	1437	926	557		
Comm Dev+1% Growth	134	78	61	159	80	82		
Growth Volume Used	1464	644	887	1437	926	557		
Total Volume	3798	1670	2301	3728	2402	1445		
Lanes	4LD							
LOS D Capacity	3220	1770	1770	3220	1770	1770		
Link Meets Test 1?	NO	YES	NO	NO	NO	YES		
LOS E Capacity	3400	1870	1870	3400	1870	1870		
Link Meets Test 2?	NO	YES	NO	NO	NO	YES		

Input Data

ROAD NAME:	Australian Ave	STATION:	2834	Report Created: 11/22/2016
CURRENT YEAR:	2016	FROM:	Midpoint	
ANALYSIS YEAR:	2018	TO:	W 13th St	
GROWTH RATE:	27.57%	COUNT DATE:	1/25/2016	
		PSF:	1	

Link Analysis

Time Period	AM			PM		
Direction	2-way	NB/EB	SB/WB	2-way	NB/EB	SB/WB
Existing Volume	2334	1026	1414	2291	1476	888
Peak Volume	2334	1026	1414	2291	1476	888
Diversion(%)	0	0	0	0	0	0
Volume after Diversion	2334	1026	1414	2291	1476	888

Committed Developments							Type	% Complete
Lake Shore Apartment	0	0	0	0	0	0	Res	100%
Wal-Mart # 3348	0	0	0	0	0	0	NR	100%
Sierra Bay Apartments	0	0	0	0	0	0	Res	100%
EZ Weld	3	2	0	3	1	3	NR	0%
JFK Middle School	0	0	0	0	0	0	NR	100%
Majestic Plaza Lots 6-8	3	1	3	4	3	1	NR	74%
Lewis Terminal	0	0	0	0	0	0	NR	100%
Riviera Beach Recycling	1	0	1	2	1	1	NR	0%
Palm Beach Outlets	4	2	3	10	5	5	NR	72%
Sun Coast High School	0	0	0	0	0	0	NR	100%
Blue Heron/Australian Office	10	9	2	14	3	11	NR	0%
Public Safety & Public Works Complex	33	28	5	35	11	24	NR	30%
7-Eleven Blue Heron	5	2	2	4	2	2	NR	0%
Champs Charter School	1	1	1	1	0	0	NR	0%
Tropical Shipping	4	1	4	11	9	2	NR	62%
7-Eleven-2100 45th St.	3	1	2	9	5	4	NR	66%
WAWA - Blue Heron & Garden	1	1	1	1	1	1	NR	78%
7-Eleven	19	9	9	19	9	10	NR	35%
Total Committed Developments	87	57	33	113	50	64		
Total Committed Residential	0	0	0	0	0	0		
Total Committed Non-Residential	87	57	33	113	50	64		
Double Count Reduction	0	0	0	0	0	0		
Total Discounted Committed Developments	87	57	33	113	50	64		
Historical Growth	1464	644	887	1437	926	557		
Comm Dev+1% Growth	134	78	61	159	80	82		
Growth Volume Used	1464	644	887	1437	926	557		
Total Volume	3798	1670	2301	3728	2402	1445		

Lanes	4LD					
LOS D Capacity	3220	1770	1770	3220	1770	1770
Link Meets Test 1?	NO	YES	NO	NO	NO	YES
LOS E Capacity	3400	1870	1870	3400	1870	1870
Link Meets Test 2?	NO	YES	NO	NO	NO	YES

Input Data

ROAD NAME:	Australian Ave	STATION:	2834		Report Created: 11/22/2016
CURRENT YEAR:	2016	FROM:	Midpoint		
ANALYSIS YEAR:	2018	TO:	Blue Heron Blvd W		
GROWTH RATE:	27.57%	COUNT DATE:	1/25/2016		
		PSF:	1		

Link Analysis

Time Period	AM			PM		
Direction	2-way	NB/EB	SB/WB	2-way	NB/EB	SB/WB
Existing Volume	2334	1026	1414	2291	1476	888
Peak Volume	2334	1026	1414	2291	1476	888
Diversion(%)	0	0	0	0	0	0
Volume after Diversion	2334	1026	1414	2291	1476	888

Committed Developments							Type	% Complete
Lake Shore Apartment	0	0	0	0	0	0	Res	100%
Wal-Mart # 3348	0	0	0	0	0	0	NR	100%
Sierra Bay Apartments	0	0	0	0	0	0	Res	100%
EZ Weld	5	1	5	7	5	1	NR	0%
JFK Middle School	0	0	0	0	0	0	NR	100%
Majestic Plaza Lots 6-8	3	1	3	4	3	1	NR	74%
Lewis Terminal	0	0	0	0	0	0	NR	100%
Riviera Beach Recycling	1	0	1	2	1	1	NR	0%
Palm Beach Outlets	4	2	3	10	5	5	NR	72%
Sun Coast High School	0	0	0	0	0	0	NR	100%
Congress Business Park	9	5	4	21	10	11	NR	25%
Blue Heron/Australian Office	10	9	2	14	3	11	NR	0%
Public Safety & Public Works Complex	21	3	18	22	15	7	NR	30%
7-Eleven Blue Heron	5	2	2	4	2	2	NR	0%
Champs Charter School	1	1	1	1	0	0	NR	0%
Riviera Beach Retail Center	8	4	4	27	13	14	NR	0%
7-Eleven-2100 45th St.	3	1	2	7	4	3	NR	66%
WAWA - Blue Heron & Garden	1	1	1	1	1	1	NR	78%
7-Eleven	19	9	9	19	9	10	NR	35%
Total Committed Developments	90	39	55	139	71	67		
Total Committed Residential	0	0	0	0	0	0		
Total Committed Non-Residential	90	39	55	139	71	67		
Double Count Reduction	0	0	0	0	0	0		
Total Discounted Committed Developments	90	39	55	139	71	67		
Historical Growth	1464	644	887	1437	926	557		
Comm Dev+1% Growth	137	60	83	185	101	85		
Growth Volume Used	1464	644	887	1437	926	557		
Total Volume	3798	1670	2301	3728	2402	1445		
Lanes	4LD							
LOS D Capacity	3220	1770	1770	3220	1770	1770		
Link Meets Test 1?	NO	YES	NO	NO	NO	YES		
LOS E Capacity	3400	1870	1870	3400	1870	1870		
Link Meets Test 2?	NO	YES	NO	NO	NO	YES		

Input Data

ROAD NAME:	Australian Ave	STATION:	2834		Report Created: 11/22/2016
CURRENT YEAR:	2016	FROM:	W 13th St		
ANALYSIS YEAR:	2018	TO:	Midpoint		
GROWTH RATE:	27.57%	COUNT DATE:	1/25/2016		
		PSF:	1		

Link Analysis

Time Period	AM			PM		
Direction	2-way	NB/EB	SB/WB	2-way	NB/EB	SB/WB
Existing Volume	2334	1026	1414	2291	1476	888
Peak Volume	2334	1026	1414	2291	1476	888
Diversion(%)	0	0	0	0	0	0
Volume after Diversion	2334	1026	1414	2291	1476	888

Committed Developments							Type	% Complete
Lake Shore Apartment	0	0	0	0	0	0	Res	100%
Wal-Mart # 3348	0	0	0	0	0	0	NR	100%
Sierra Bay Apartments	0	0	0	0	0	0	Res	100%
EZ Weld	5	1	5	7	5	1	NR	0%
JFK Middle School	0	0	0	0	0	0	NR	100%
Majestic Plaza Lots 6-8	3	1	3	4	3	1	NR	74%
Lewis Terminal	0	0	0	0	0	0	NR	100%
Riviera Beach Recycling	1	0	1	2	1	1	NR	0%
Palm Beach Outlets	4	2	3	10	5	5	NR	72%
Sun Coast High School	0	0	0	0	0	0	NR	100%
Congress Business Park	9	5	4	21	10	11	NR	25%
Blue Heron/Australian Office	10	9	2	14	3	11	NR	0%
Public Safety & Public Works Complex	21	3	18	22	15	7	NR	30%
7-Eleven Blue Heron	5	2	2	4	2	2	NR	0%
Champs Charter School	1	1	1	1	0	0	NR	0%
Riviera Beach Retail Center	8	4	4	27	13	14	NR	0%
7-Eleven-2100 45th St.	3	1	2	7	4	3	NR	66%
WAWA - Blue Heron & Garden	1	1	1	1	1	1	NR	78%
7-Eleven	19	9	9	19	9	10	NR	35%
Total Committed Developments	90	39	55	139	71	67		
Total Committed Residential	0	0	0	0	0	0		
Total Committed Non-Residential	90	39	55	139	71	67		
Double Count Reduction	0	0	0	0	0	0		
Total Discounted Committed Developments	90	39	55	139	71	67		
Historical Growth	1464	644	887	1437	926	557		
Comm Dev+1% Growth	137	60	83	185	101	85		
Growth Volume Used	1464	644	887	1437	926	557		
Total Volume	3798	1670	2301	3728	2402	1445		
Lanes	4LD							
LOS D Capacity	3220	1770	1770	3220	1770	1770		
Link Meets Test 1?	NO	YES	NO	NO	NO	YES		
LOS E Capacity	3400	1870	1870	3400	1870	1870		
Link Meets Test 2?	NO	YES	NO	NO	NO	YES		

Input Data

ROAD NAME:	Old Dixie Hwy	STATION:	2808		Report Created: 11/22/2016
CURRENT YEAR:	2016	FROM:	Blue Heron Blvd W		
ANALYSIS YEAR:	2018	TO:	Midpoint		
GROWTH RATE:	1.18%	COUNT DATE:	3/14/2016		
		PSF:	1		

Link Analysis

Time Period	AM			PM		
Direction	2-way	NB/EB	SB/WB	2-way	NB/EB	SB/WB
Existing Volume	1096	457	639	1282	686	608
Peak Volume	1096	457	639	1282	686	608
Diversion(%)	0	0	0	0	0	0
Volume after Diversion	1096	457	639	1282	686	608

Committed Developments							Type	% Complete
Parcel 34.01 A	0	0	0	0	0	0	NR	100%
Parcel 34.03 C	0	0	0	0	0	0	NR	100%
Northlake Square East	0	0	0	0	0	0	NR	100%
Wal-Mart # 3348	0	0	0	0	0	0	NR	100%
Sierra Bay Apartments	0	0	0	0	0	0	Res	100%
10th Street Retail	0	0	0	0	0	0	NR	0%
EZ Weld	3	0	2	3	3	1	NR	0%
Northlake Promenade Shoppes	2	1	1	10	5	5	NR	64%
Water Tower Park	4	3	1	4	1	3	NR	0%
Pentacostal Church - Child Development Center	31	17	14	31	14	17	NR	0%
Lewis Terminal	0	0	0	0	0	0	NR	100%
Stewart Toyota Expansion	3	2	1	4	2	2	NR	62%
Village Shoppes II	16	7	9	35	18	17	NR	30%
Sun Coast High School	0	0	0	0	0	0	NR	100%
Congress Business Park	18	10	8	42	19	22	NR	25%
Community Learning Outreach Center	34	19	15	7	3	4	NR	0%
Blue Heron/Australian Office	2	0	2	3	2	1	NR	0%
Public Safety & Public Works Complex	8	1	7	8	6	2	NR	30%
7-Eleven Blue Heron	8	4	4	7	4	4	NR	0%
Champs Charter School	14	6	8	6	4	2	NR	0%
One Park Place	11	6	5	24	12	12	NR	0%
Total Committed Developments	154	76	77	184	93	92		
Total Committed Residential	0	0	0	0	0	0		
Total Committed Non-Residential	154	76	77	184	93	92		
Double Count Reduction	0	0	0	0	0	0		
Total Discounted Committed Developments	154	76	77	184	93	92		
Historical Growth	26	11	15	30	16	14		
Comm Dev+1% Growth	176	85	90	210	107	104		
Growth Volume Used	176	85	90	210	107	104		
Total Volume	1272	542	729	1492	793	712		
Lanes	4LD							
LOS D Capacity	3220	1960	1960	3220	1960	1960		
Link Meets Test 1?	YES	YES	YES	YES	YES	YES		
LOS E Capacity	3400	1960	1960	3400	1960	1960		
Link Meets Test 2?	YES	YES	YES	YES	YES	YES		

Input Data

ROAD NAME:	Old Dixie Hwy	STATION:	2808	Report Created: 11/22/2016
CURRENT YEAR:	2016	FROM:	Midpoint	
ANALYSIS YEAR:	2018	TO:	Silver Beach Rd	
GROWTH RATE:	1.18%	COUNT DATE:	3/14/2016	
		PSF:	1	

Link Analysis

Time Period	AM			PM		
Direction	2-way	NB/EB	SB/WB	2-way	NB/EB	SB/WB
Existing Volume	1096	457	639	1282	686	608
Peak Volume	1096	457	639	1282	686	608
Diversion(%)	0	0	0	0	0	0
Volume after Diversion	1096	457	639	1282	686	608

Committed Developments							Type	% Complete
Parcel 34.01 A	0	0	0	0	0	0	NR	100%
Parcel 34.03 C	0	0	0	0	0	0	NR	100%
Northlake Square East	0	0	0	0	0	0	NR	100%
Wal-Mart # 3348	0	0	0	0	0	0	NR	100%
Sierra Bay Apartments	0	0	0	0	0	0	Res	100%
10th Street Retail	0	0	0	0	0	0	NR	0%
EZ Weld	3	0	2	3	3	1	NR	0%
Northlake Promenade Shoppes	2	1	1	10	5	5	NR	64%
Water Tower Park	4	3	1	4	1	3	NR	0%
Pentacostal Church - Child Development Center	10	5	6	10	6	5	NR	0%
Lewis Terminal	0	0	0	0	0	0	NR	100%
Stewart Toyota Expansion	3	2	1	4	2	2	NR	62%
Village Shoppes II	16	7	9	35	18	17	NR	30%
Sun Coast High School	0	0	0	0	0	0	NR	100%
Congress Business Park	18	10	8	42	19	22	NR	25%
Community Learning Outreach Center	34	19	15	7	3	4	NR	0%
Blue Heron/Australian Office	2	0	2	3	2	1	NR	0%
Public Safety & Public Works Complex	8	1	7	8	6	2	NR	30%
7-Eleven Blue Heron	8	4	4	7	4	4	NR	0%
Champs Charter School	14	6	8	6	4	2	NR	0%
One Park Place	11	6	5	24	12	12	NR	0%
Total Committed Developments	133	64	69	163	85	80		
Total Committed Residential	0	0	0	0	0	0		
Total Committed Non-Residential	133	64	69	163	85	80		
Double Count Reduction	0	0	0	0	0	0		
Total Discounted Committed Developments	133	64	69	163	85	80		
Historical Growth	26	11	15	30	16	14		
Comm Dev+1% Growth	155	73	82	189	99	92		
Growth Volume Used	155	73	82	189	99	92		
Total Volume	1251	530	721	1471	785	700		

Lanes	4LD					
LOS D Capacity	3220	1960	1960	3220	1960	1960
Link Meets Test 1?	YES	YES	YES	YES	YES	YES
LOS E Capacity	3400	1960	1960	3400	1960	1960
Link Meets Test 2?	YES	YES	YES	YES	YES	YES

Input Data

ROAD NAME:	Old Dixie Hwy	STATION:	2810	Report Created: 11/22/2016
CURRENT YEAR:	2016	FROM:	W 13th St	
ANALYSIS YEAR:	2018	TO:	Midpoint	
GROWTH RATE:	-2.17%	COUNT DATE:	1/25/2016	
		PSF:	1	

Link Analysis

Time Period	AM			PM		
Direction	2-way	NB/EB	SB/WB	2-way	NB/EB	SB/WB
Existing Volume	1058	448	614	1076	615	461
Peak Volume	1058	448	614	1076	615	461
Diversion(%)	0	0	0	0	0	0
Volume after Diversion	1058	448	614	1076	615	461

Committed Developments							Type	% Complete
Port Office Warehouse	0	0	0	0	0	0	NR	100%
13th Street Industrial Warehouse	6	1	5	6	6	1	NR	0%
Wal-Mart # 3348	0	0	0	0	0	0	NR	100%
Sierra Bay Apartments	0	0	0	0	0	0	Res	100%
EZ Weld	8	7	1	10	2	8	NR	0%
Pentacostal Church - Child Development Center	6	3	3	6	3	3	NR	0%
Lewis Terminal	0	0	0	0	0	0	NR	100%
Village Shoppes II	7	3	4	14	7	7	NR	30%
Sun Coast High School	0	0	0	0	0	0	NR	100%
Congress Business Park	15	6	8	35	19	16	NR	25%
Blue Heron/Australian Office	2	2	0	3	1	2	NR	0%
Public Safety & Public Works Complex	1	0	1	1	1	0	NR	30%
7-Eleven Blue Heron	3	2	2	3	1	1	NR	0%
Champs Charter School	36	16	20	15	10	5	NR	0%
Total Committed Developments	84	40	44	93	50	43		
Total Committed Residential	0	0	0	0	0	0		
Total Committed Non-Residential	84	40	44	93	50	43		
Double Count Reduction	0	0	0	0	0	0		
Total Discounted Committed Developments	84	40	44	93	50	43		
Historical Growth	-45	-19	-26	-46	-26	-20		
Comm Dev+1% Growth	105	49	56	115	62	52		
Growth Volume Used	105	49	56	115	62	52		
Total Volume	1163	497	670	1191	677	513		

Lanes	5L					
LOS D Capacity	3220	1960	1960	3220	1960	1960
Link Meets Test 1?	YES	YES	YES	YES	YES	YES
LOS E Capacity	3400	1960	1960	3400	1960	1960
Link Meets Test 2?	YES	YES	YES	YES	YES	YES

Input Data

ROAD NAME:	Old Dixie Hwy	STATION:	2810		Report Created: 11/22/2016
CURRENT YEAR:	2016	FROM:	Midpoint		
ANALYSIS YEAR:	2018	TO:	Blue Heron Blvd W		
GROWTH RATE:	-2.17%	COUNT DATE:	1/25/2016		
		PSF:	1		

Link Analysis

Time Period	AM			PM		
Direction	2-way	NB/EB	SB/WB	2-way	NB/EB	SB/WB
Existing Volume	1058	448	614	1076	615	461
Peak Volume	1058	448	614	1076	615	461
Diversion(%)	0	0	0	0	0	0
Volume after Diversion	1058	448	614	1076	615	461

Committed Developments							Type	% Complete
Port Office Warehouse	0	0	0	0	0	0	NR	100%
13th Street Industrial Warehouse	6	1	5	6	6	1	NR	0%
Wal-Mart # 3348	0	0	0	0	0	0	NR	100%
Sierra Bay Apartments	0	0	0	0	0	0	Res	100%
EZ Weld	7	1	6	9	7	2	NR	0%
Pentacostal Church - Child Development Center	6	3	3	6	3	3	NR	0%
Lewis Terminal	0	0	0	0	0	0	NR	100%
Village Shoppes II	7	3	4	14	7	7	NR	30%
Sun Coast High School	0	0	0	0	0	0	NR	100%
Congress Business Park	15	6	8	35	19	16	NR	25%
Blue Heron/Australian Office	2	2	0	3	1	2	NR	0%
Public Safety & Public Works Complex	1	0	1	1	1	0	NR	30%
7-Eleven Blue Heron	3	2	2	3	1	1	NR	0%
Champs Charter School	36	16	20	15	10	5	NR	0%
Total Committed Developments	83	34	49	92	55	37		
Total Committed Residential	0	0	0	0	0	0		
Total Committed Non-Residential	83	34	49	92	55	37		
Double Count Reduction	0	0	0	0	0	0		
Total Discounted Committed Developments	83	34	49	92	55	37		
Historical Growth	-45	-19	-26	-46	-26	-20		
Comm Dev+1% Growth	104	43	61	114	67	46		
Growth Volume Used	104	43	61	114	67	46		
Total Volume	1162	491	675	1190	682	507		

Lanes	5L					
LOS D Capacity	3220	1960	1960	3220	1960	1960
Link Meets Test 1?	YES	YES	YES	YES	YES	YES
LOS E Capacity	3400	1960	1960	3400	1960	1960
Link Meets Test 2?	YES	YES	YES	YES	YES	YES

Input Data

ROAD NAME:	Blue Heron Blvd W	STATION:	2811	Report Created: 11/22/2016
CURRENT YEAR:	2016	FROM:	Midpoint	
ANALYSIS YEAR:	2018	TO:	Broadway	
GROWTH RATE:	1.77%	COUNT DATE:	1/25/2016	
		PSF:	1	

Link Analysis

Time Period		AM			PM			
Direction	2-way	NB/EB	SB/WB	2-way	NB/EB	SB/WB		
Existing Volume	1333	787	586	1696	794	934		
Peak Volume	1333	787	586	1696	794	934		
Diversion(%)	0	0	0	0	0	0		
Volume after Diversion	1333	787	586	1696	794	934		
Committed Developments							Type	% Complete
Parcel 34.01 A	0	0	0	0	0	0	NR	100%
The Island Spa	0	0	0	0	0	0	NR	100%
Northlake Square East	0	0	0	0	0	0	NR	100%
Wal-Mart # 3348	0	0	0	0	0	0	NR	100%
Sierra Bay Apartments	0	0	0	0	0	0	Res	100%
EZ Weld	1	0	1	2	1	0	NR	0%
Northlake Promenade Shoppes	4	2	2	21	10	11	NR	64%
Pentacostal Church - Child Development Center	6	3	3	6	3	3	NR	0%
Wellness Resort	41	30	11	53	23	30	NR	0%
Lewis Terminal	0	0	0	0	0	0	NR	100%
Stewart Toyota Expansion	13	9	4	17	8	9	NR	62%
Village Shoppes II	33	14	18	70	36	34	NR	30%
Palm Beach Outlets	3	1	2	7	4	3	NR	72%
Sun Coast High School	0	0	0	0	0	0	NR	100%
Blue Heron/Australian Office	2	0	2	3	2	1	NR	0%
Public Safety & Public Works Complex	8	1	7	8	6	2	NR	30%
7-Eleven Blue Heron	33	17	17	31	16	16	NR	0%
Champs Charter School	7	3	4	3	2	1	NR	0%
Avenir	5	2	3	6	3	4	Res	0%
Total Committed Developments	156	82	74	227	114	114		
Total Committed Residential	5	2	3	6	3	4		
Total Committed Non-Residential	151	80	71	221	111	110		
Double Count Reduction	1	1	1	2	1	1		
Total Discounted Committed Developments	155	81	73	225	113	113		
Historical Growth	47	28	21	60	28	33		
Comm Dev+1% Growth	182	97	85	259	129	132		
Growth Volume Used	182	97	85	259	129	132		
Total Volume	1515	884	671	1955	923	1066		
Lanes	5L							
LOS D Capacity	3220	1770	1770	3220	1770	1770		
Link Meets Test 1?	YES	YES	YES	YES	YES	YES		
LOS E Capacity	3400	1870	1870	3400	1870	1870		
Link Meets Test 2?	YES	YES	YES	YES	YES	YES		

Input Data

ROAD NAME:	Blue Heron Blvd W	STATION:	2811		Report Created: 11/22/2016
CURRENT YEAR:	2016	FROM:	Old Dixie Hwy		
ANALYSIS YEAR:	2018	TO:	Midpoint		
GROWTH RATE:	1.77%	COUNT DATE:	1/25/2016		
		PSF:	1		

Link Analysis

Time Period	AM			PM		
Direction	2-way	NB/EB	SB/WB	2-way	NB/EB	SB/WB
Existing Volume	1333	787	586	1696	794	934
Peak Volume	1333	787	586	1696	794	934
Diversion(%)	0	0	0	0	0	0
Volume after Diversion	1333	787	586	1696	794	934

Committed Developments							Type	% Complete
Parcel 34.01 A	0	0	0	0	0	0	NR	100%
The Island Spa	0	0	0	0	0	0	NR	100%
Northlake Square East	0	0	0	0	0	0	NR	100%
Wal-Mart # 3348	0	0	0	0	0	0	NR	100%
Sierra Bay Apartments	0	0	0	0	0	0	Res	100%
EZ Weld	1	0	1	2	1	0	NR	0%
Northlake Promenade Shoppes	4	2	2	21	10	11	NR	64%
Pentacostal Church - Child Development Center	6	3	3	6	3	3	NR	0%
Wellness Resort	41	30	11	53	23	30	NR	0%
Lewis Terminal	0	0	0	0	0	0	NR	100%
Stewart Toyota Expansion	13	9	4	17	8	9	NR	62%
Village Shoppes II	33	14	18	70	36	34	NR	30%
Palm Beach Outlets	3	1	2	7	4	3	NR	72%
Sun Coast High School	0	0	0	0	0	0	NR	100%
Blue Heron/Australian Office	2	0	2	3	2	1	NR	0%
Public Safety & Public Works Complex	8	1	7	8	6	2	NR	30%
7-Eleven Blue Heron	33	17	17	31	16	16	NR	0%
Champs Charter School	7	3	4	3	2	1	NR	0%
Avenir	5	2	3	6	3	4	Res	0%
Total Committed Developments	156	82	74	227	114	114		
Total Committed Residential	5	2	3	6	3	4		
Total Committed Non-Residential	151	80	71	221	111	110		
Double Count Reduction	1	1	1	2	1	1		
Total Discounted Committed Developments	155	81	73	225	113	113		
Historical Growth	47	28	21	60	28	33		
Comm Dev+1% Growth	182	97	85	259	129	132		
Growth Volume Used	182	97	85	259	129	132		
Total Volume	1515	884	671	1955	923	1066		
Lanes	5L							
LOS D Capacity	3220	1770	1770	3220	1770	1770		
Link Meets Test 1?	YES	YES	YES	YES	YES	YES		
LOS E Capacity	3400	1870	1870	3400	1870	1870		
Link Meets Test 2?	YES	YES	YES	YES	YES	YES		

Input Data

ROAD NAME:	Blue Heron Blvd W	STATION:	2823	Report Created: 11/22/2016
CURRENT YEAR:	2016	FROM:	Midpoint	
ANALYSIS YEAR:	2018	TO:	Old Dixie Hwy	
GROWTH RATE:	1.85%	COUNT DATE:	1/25/2016	
		PSF:	1	

Link Analysis

Time Period	AM			PM		
Direction	2-way	NB/EB	SB/WB	2-way	NB/EB	SB/WB
Existing Volume	2176	1194	1029	2474	1156	1340
Peak Volume	2176	1194	1029	2474	1156	1340
Diversion(%)	0	0	0	0	0	0
Volume after Diversion	2176	1194	1029	2474	1156	1340

Committed Developments							Type	% Complete
Parcel 34.01 A	0	0	0	0	0	0	NR	100%
Northlake Square East	0	0	0	0	0	0	NR	100%
Wal-Mart # 3348	0	0	0	0	0	0	NR	100%
Sierra Bay Apartments	0	0	0	0	0	0	Res	100%
EZ Weld	5	5	1	7	1	5	NR	0%
JFK Middle School	0	0	0	0	0	0	NR	100%
Pentacostal Church - Child Development Center	18	10	9	18	9	10	NR	0%
Lewis Terminal	0	0	0	0	0	0	NR	100%
Village Shoppes II	33	14	18	70	36	34	NR	30%
Palm Beach Outlets	4	2	3	10	5	5	NR	72%
Sun Coast High School	0	0	0	0	0	0	NR	100%
Congress Business Park	9	4	5	21	11	10	NR	25%
Community Learning Outreach Center	8	5	4	2	1	1	NR	0%
Blue Heron/Australian Office	23	4	19	31	24	7	NR	0%
Public Safety & Public Works Complex	15	2	13	16	11	5	NR	30%
7-Eleven Blue Heron	23	11	11	21	11	11	NR	0%
Champs Charter School	21	12	9	9	3	6	NR	0%
Avenir	5	2	3	6	3	4	Res	0%
Riviera Beach Retail Center	11	6	5	36	18	18	NR	0%
WAWA - Blue Heron & Garden	2	1	1	2	1	1	NR	78%
7-Eleven	11	6	6	12	6	6	NR	35%
Total Committed Developments	188	84	107	261	140	123		
Total Committed Residential	5	2	3	6	3	4		
Total Committed Non-Residential	183	82	104	255	137	119		
Double Count Reduction	1	1	1	2	1	1		
Total Discounted Committed Developments	187	83	106	259	139	122		
Historical Growth	81	45	39	93	43	50		
Comm Dev+1% Growth	231	107	127	309	162	149		
Growth Volume Used	231	107	127	309	162	149		
Total Volume	2407	1301	1156	2783	1318	1489		

Lanes	6LD					
LOS D Capacity	4880	2680	2680	4880	2680	2680
Link Meets Test 1?	YES	YES	YES	YES	YES	YES
LOS E Capacity	5150	2830	2830	5150	2830	2830
Link Meets Test 2?	YES	YES	YES	YES	YES	YES

Input Data

ROAD NAME:	Blue Heron Blvd W	STATION:	2823		Report Created: 11/22/2016
CURRENT YEAR:	2016	FROM:	Australian Ave		
ANALYSIS YEAR:	2018	TO:	MIDPOINT		
GROWTH RATE:	1.85%	COUNT DATE:	1/25/2016		
		PSF:	1		

Link Analysis

Time Period		AM			PM	
Direction	2-way	NB/EB	SB/WB	2-way	NB/EB	SB/WB
Existing Volume	2176	1194	1029	2474	1156	1340
Peak Volume	2176	1194	1029	2474	1156	1340
Diversion(%)	0	0	0	0	0	0
Volume after Diversion	2176	1194	1029	2474	1156	1340

Committed Developments							Type	% Complete
Parcel 34.01 A	0	0	0	0	0	0	NR	100%
Lake Shore Apartment	0	0	0	0	0	0	Res	100%
Northlake Square East	0	0	0	0	0	0	NR	100%
Wal-Mart # 3348	0	0	0	0	0	0	NR	100%
Sierra Bay Apartments	0	0	0	0	0	0	Res	100%
EZ Weld	5	5	1	7	1	5	NR	0%
JFK Middle School	0	0	0	0	0	0	NR	100%
Pentacostal Church - Child Development Center	18	10	9	18	9	10	NR	0%
Lewis Terminal	0	0	0	0	0	0	NR	100%
Village Shoppes II	33	14	18	70	36	34	NR	30%
Palm Beach Outlets	4	2	3	10	5	5	NR	72%
Sun Coast High School	0	0	0	0	0	0	NR	100%
Congress Business Park	9	4	5	21	11	10	NR	25%
Community Learning Outreach Center	8	5	4	2	1	1	NR	0%
Blue Heron/Australian Office	23	19	4	31	7	24	NR	0%
Public Safety & Public Works Complex	15	2	13	16	11	5	NR	30%
7-Eleven Blue Heron	23	11	11	21	11	11	NR	0%
Champs Charter School	21	12	9	9	3	6	NR	0%
Avenir	5	2	3	6	3	4	Res	0%
Riviera Beach Retail Center	11	6	5	36	18	18	NR	0%
WAWA - Blue Heron & Garden	2	1	1	2	1	1	NR	78%
7-Eleven	11	6	6	12	6	6	NR	35%
Total Committed Developments	188	99	92	261	123	140		
Total Committed Residential	5	2	3	6	3	4		
Total Committed Non-Residential	183	97	89	255	120	136		
Double Count Reduction	1	1	1	2	1	1		
Total Discounted Committed Developments	187	98	91	259	122	139		
Historical Growth	81	45	39	93	43	50		
Comm Dev+1% Growth	231	122	112	309	145	166		
Growth Volume Used	231	122	112	309	145	166		
Total Volume	2407	1316	1141	2783	1301	1506		

Lanes	6LD					
LOS D Capacity	4880	2680	2680	4880	2680	2680
Link Meets Test 1?	YES	YES	YES	YES	YES	YES
LOS E Capacity	5150	2830	2830	5150	2830	2830
Link Meets Test 2?	YES	YES	YES	YES	YES	YES

Input Data

ROAD NAME:	Blue Heron Blvd W	STATION:	2607		Report Created: 11/22/2016
CURRENT YEAR:	2016	FROM:	MIDPOINT		
ANALYSIS YEAR:	2018	TO:	Australian Ave		
GROWTH RATE:	1.57%	COUNT DATE:	1/25/2016		
		PSF:	1		

Link Analysis

Time Period		AM			PM	
Direction	2-way	NB/EB	SB/WB	2-way	NB/EB	SB/WB
Existing Volume	2622	1553	1136	2819	1235	1619
Peak Volume	2622	1553	1136	2819	1235	1619
Diversion(%)	0	0	0	0	0	0
Volume after Diversion	2622	1553	1136	2819	1235	1619

Committed Developments							Type	% Complete
Parcel 34.01 A	0	0	0	0	0	0	NR	100%
Parcel 34.03 C	0	0	0	0	0	0	NR	100%
Lake Shore Apartment	0	0	0	0	0	0	Res	100%
Northlake Square East	0	0	0	0	0	0	NR	100%
Wal-Mart # 3348	0	0	0	0	0	0	NR	100%
Sierra Bay Apartments	0	0	0	0	0	0	Res	100%
EZ Weld	10	9	2	13	3	10	NR	0%
JFK Middle School	0	0	0	0	0	0	NR	100%
Triangle Commerce	13	9	4	18	6	12	NR	20%
Commerce Bank City of Riviera Beach	0	0	0	0	0	0	NR	100%
Lewis Terminal	0	0	0	0	0	0	NR	100%
Sonic Restaurant	0	0	0	0	0	0	NR	100%
Walmart - 45th St	0	0	0	0	0	0	NR	100%
Village Shoppes II	33	14	18	70	36	34	NR	30%
Enterprise Rent-A-Car	0	0	0	0	0	0	NR	100%
Palm Beach Outlets	4	2	3	10	5	5	NR	72%
Sun Coast High School	0	0	0	0	0	0	NR	100%
Congress Business Park	18	8	10	42	22	19	NR	25%
Community Learning Outreach Center	13	6	7	3	1	1	NR	0%
Blue Heron/Australian Office	23	19	4	31	7	24	NR	0%
Public Safety & Public Works Complex	22	19	4	23	7	16	NR	30%
7-Eleven Blue Heron	18	9	9	17	9	9	NR	0%
Champs Charter School	21	12	9	9	3	6	NR	0%
Avenir	5	2	3	6	3	4	Res	0%
Atkins Daycare	14	6	7	14	7	7	NR	0%
Riviera Beach Retail Center	19	9	10	63	32	31	NR	0%
Altec Riviera Beach	8	2	5	8	4	4	NR	0%
7-Eleven-2100 45th St.	1	1	1	4	2	2	NR	66%
WAWA - Blue Heron & Garden	7	3	3	6	3	3	NR	78%
FPL Distrubution Center	2	0	2	11	9	2	NR	34%
7-Eleven	4	2	2	4	2	2	NR	35%
Total Committed Developments	235	132	103	352	161	191		
Total Committed Residential	5	2	3	6	3	4		
Total Committed Non-Residential	230	130	100	346	158	187		
Double Count Reduction	1	1	1	2	1	1		
Total Discounted Committed Developments	234	131	102	350	160	190		
Historical Growth	83	49	36	89	39	51		
Comm Dev+1% Growth	287	162	125	407	185	223		
Growth Volume Used	287	162	125	407	185	223		
Total Volume	2909	1715	1261	3226	1420	1842		

Lanes	6LD					
LOS D Capacity	4880	2680	2680	4880	2680	2680
Link Meets Test 1?	YES	YES	YES	YES	YES	YES
LOS E Capacity	5150	2830	2830	5150	2830	2830
Link Meets Test 2?	YES	YES	YES	YES	YES	YES

Input Data

ROAD NAME:	Blue Heron Blvd W	STATION:	2607		Report Created: 11/22/2016
CURRENT YEAR:	2016	FROM:	N Congress Ave		
ANALYSIS YEAR:	2018	TO:	Midpoint		
GROWTH RATE:	1.57%	COUNT DATE:	1/25/2016		
		PSF:	1		

Link Analysis

Time Period		AM			PM	
Direction	2-way	NB/EB	SB/WB	2-way	NB/EB	SB/WB
Existing Volume	2622	1553	1136	2819	1235	1619
Peak Volume	2622	1553	1136	2819	1235	1619
Diversion(%)	0	0	0	0	0	0
Volume after Diversion	2622	1553	1136	2819	1235	1619

Committed Developments							Type	% Complete
Parcel 34.01 A	0	0	0	0	0	0	NR	100%
Parcel 34.03 C	0	0	0	0	0	0	NR	100%
Lake Shore Apartment	0	0	0	0	0	0	Res	100%
Northlake Square East	0	0	0	0	0	0	NR	100%
Wal-Mart # 3348	0	0	0	0	0	0	NR	100%
Sierra Bay Apartments	0	0	0	0	0	0	Res	100%
EZ Weld	10	9	2	13	3	10	NR	0%
JFK Middle School	0	0	0	0	0	0	NR	100%
Triangle Commerce	13	9	4	18	6	12	NR	20%
Commerce Bank City of Riviera Beach	0	0	0	0	0	0	NR	100%
Lewis Terminal	0	0	0	0	0	0	NR	100%
Sonic Restaurant	0	0	0	0	0	0	NR	100%
Walmart - 45th St	0	0	0	0	0	0	NR	100%
Village Shoppes II	33	14	18	70	36	34	NR	30%
Enterprise Rent-A-Car	0	0	0	0	0	0	NR	100%
Palm Beach Outlets	4	2	3	10	5	5	NR	72%
Sun Coast High School	0	0	0	0	0	0	NR	100%
Congress Business Park	18	8	10	42	22	19	NR	25%
Community Learning Outreach Center	13	6	7	3	1	1	NR	0%
Blue Heron/Australian Office	23	19	4	31	7	24	NR	0%
Public Safety & Public Works Complex	22	19	4	23	7	16	NR	30%
7-Eleven Blue Heron	18	9	9	17	9	9	NR	0%
Champs Charter School	21	12	9	9	3	6	NR	0%
Avenir	5	2	3	6	3	4	Res	0%
Atkins Daycare	27	15	13	28	13	15	NR	0%
Riviera Beach Retail Center	34	18	16	117	57	60	NR	0%
Altec Riviera Beach	8	2	5	8	4	4	NR	0%
7-Eleven-2100 45th St.	1	1	1	4	2	2	NR	66%
WAWA - Blue Heron & Garden	7	3	3	6	3	3	NR	78%
FPL Distrubution Center	2	0	2	11	9	2	NR	34%
7-Eleven	4	2	2	4	2	2	NR	35%
Total Committed Developments	263	150	115	420	192	228		
Total Committed Residential	5	2	3	6	3	4		
Total Committed Non-Residential	258	148	112	414	189	224		
Double Count Reduction	1	1	1	2	1	1		
Total Discounted Committed Developments	262	149	114	418	191	227		
Historical Growth	83	49	36	89	39	51		
Comm Dev+1% Growth	315	180	137	475	216	260		
Growth Volume Used	315	180	137	475	216	260		
Total Volume	2937	1733	1273	3294	1451	1879		

Lanes	6LD					
LOS D Capacity	4880	2680	2680	4880	2680	2680
Link Meets Test 1?	YES	YES	YES	YES	YES	YES
LOS E Capacity	5150	2830	2830	5150	2830	2830
Link Meets Test 2?	YES	YES	YES	YES	YES	YES

Input Data

ROAD NAME:	W 13th St	STATION:	0	Report Created: 11/22/2016
CURRENT YEAR:	2016	FROM:	Midpoint	
ANALYSIS YEAR:	2018	TO:	Midpoint	
GROWTH RATE:	0%	COUNT DATE:	NA	
		PSF:	0	

Link Analysis

Time Period	AM			PM		
Direction	2-way	NB/EB	SB/WB	2-way	NB/EB	SB/WB
Existing Volume	0	0	0	0	0	0
Peak Volume	0	0	0	0	0	0
Diversion(%)	0	0	0	0	0	0
Volume after Diversion	0	0	0	0	0	0

Committed Developments							Type	% Complete
EZ Weld	3	2	0	3	1	3	NR	0%
Lewis Terminal	0	0	0	0	0	0	NR	100%
Sun Coast High School	0	0	0	0	0	0	NR	100%
Public Safety & Public Works Complex	39	33	6	40	12	28	NR	30%
7-Eleven Blue Heron	3	2	2	3	1	1	NR	0%
Champs Charter School	14	8	6	6	2	4	NR	0%
Total Committed Developments	59	45	14	52	16	36		
Total Committed Residential	0	0	0	0	0	0		
Total Committed Non-Residential	59	45	14	52	16	36		
Double Count Reduction	0	0	0	0	0	0		
Total Discounted Committed Developments	59	45	14	52	16	36		
Historical Growth	0	0	0	0	0	0		
Comm Dev+1% Growth	59	45	14	52	16	36		
Growth Volume Used	59	45	14	52	16	36		
Total Volume	59	45	14	52	16	36		

Lanes	2L					
LOS D Capacity	1480	810	810	1480	810	810
Link Meets Test 1?	YES	YES	YES	YES	YES	YES
LOS E Capacity	1570	860	860	1570	860	860
Link Meets Test 2?	YES	YES	YES	YES	YES	YES

Input Data

ROAD NAME:	W 13th St	STATION:	0		Report Created: 11/22/2016
CURRENT YEAR:	2016	FROM:	Midpoint		
ANALYSIS YEAR:	2018	TO:	Old Dixie Hwy		
GROWTH RATE:	0%	COUNT DATE:	NA		
		PSF:	0		

Link Analysis

Time Period	AM			PM				
Direction	2-way	NB/EB	SB/WB	2-way	NB/EB	SB/WB		
Existing Volume	0	0	0	0	0	0		
Peak Volume	0	0	0	0	0	0		
Diversion(%)	0	0	0	0	0	0		
Volume after Diversion	0	0	0	0	0	0		
Committed Developments							Type	% Complete
EZ Weld	24	4	20	30	24	6	NR	0%
Lewis Terminal	0	0	0	0	0	0	NR	100%
Sun Coast High School	0	0	0	0	0	0	NR	100%
Public Safety & Public Works Complex	2	0	2	2	2	1	NR	30%
7-Eleven Blue Heron	3	2	2	3	1	1	NR	0%
Champs Charter School	14	8	6	6	2	4	NR	0%
Total Committed Developments	43	14	30	41	29	12		
Total Committed Residential	0	0	0	0	0	0		
Total Committed Non-Residential	43	14	30	41	29	12		
Double Count Reduction	0	0	0	0	0	0		
Total Discounted Committed Developments	43	14	30	41	29	12		
Historical Growth	0	0	0	0	0	0		
Comm Dev+1% Growth	43	14	30	41	29	12		
Growth Volume Used	43	14	30	41	29	12		
Total Volume	43	14	30	41	29	12		
Lanes	2L							
LOS D Capacity	1480	810	810	1480	810	810		
Link Meets Test 1?	YES	YES	YES	YES	YES	YES		
LOS E Capacity	1570	860	860	1570	860	860		
Link Meets Test 2?	YES	YES	YES	YES	YES	YES		

APPENDIX C

TRIP GENERATION RATES

Variety Store
(814)

Average Vehicle Trip Ends vs: 1000 Sq. Feet Gross Floor Area
On a: Weekday

Number of Studies: 15
Average 1000 Sq. Feet GFA: 10
Directional Distribution: 50% entering, 50% exiting

Trip Generation per 1000 Sq. Feet Gross Floor Area

Average Rate	Range of Rates	Standard Deviation
64.03	33.73 - 133.60	25.69

Data Plot and Equation

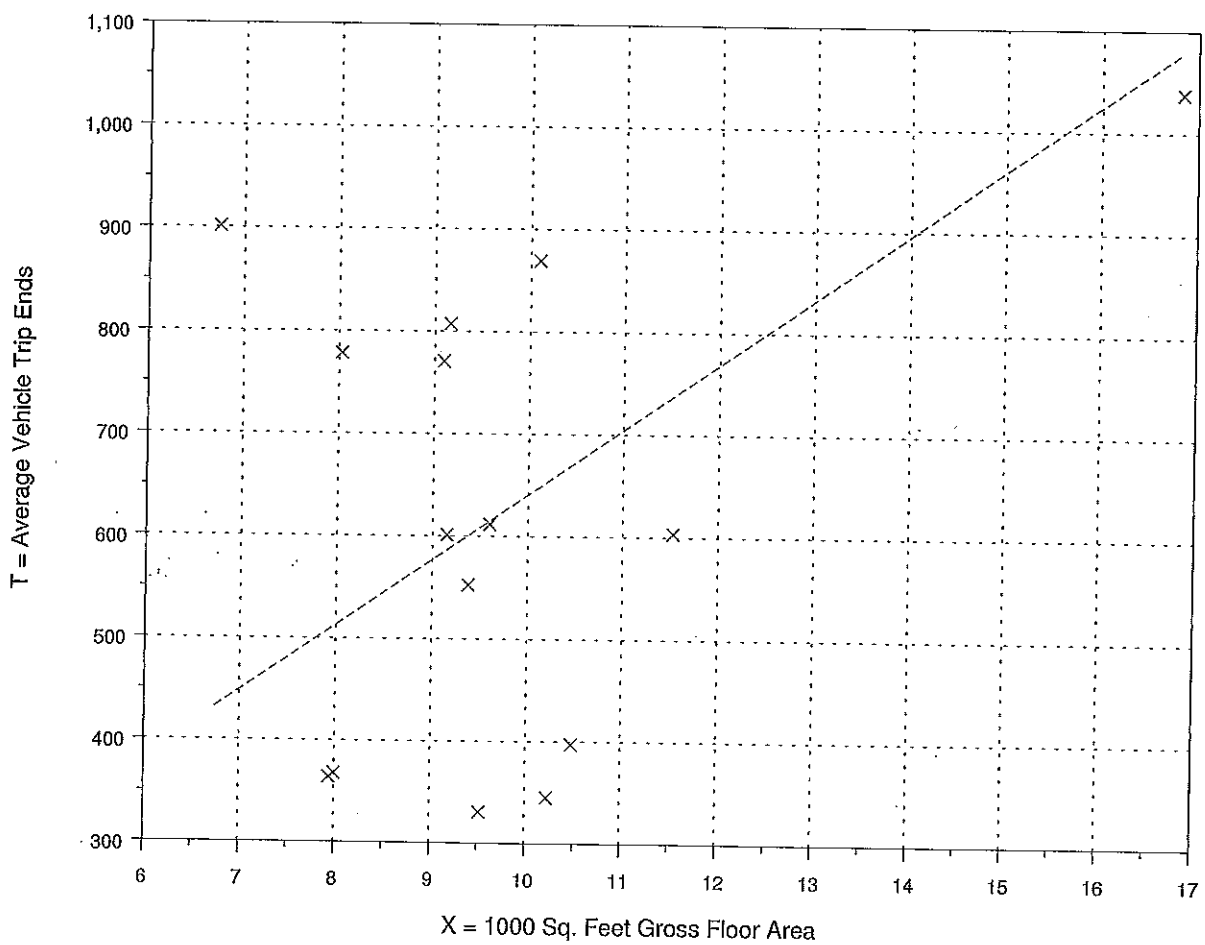

× Actual Data Points

------ Average Rate

Fitted Curve Equation: Not given

R^2 = ****

Variety Store
(814)

Average Vehicle Trip Ends vs: 1000 Sq. Feet Gross Floor Area
On a: Weekday,
Peak Hour of Adjacent Street Traffic,
One Hour Between 7 and 9 a.m.

Number of Studies: 15
Average 1000 Sq. Feet GFA: 10
Directional Distribution: Not available

Trip Generation per 1000 Sq. Feet Gross Floor Area

Average Rate	Range of Rates	Standard Deviation
3.81	1.68 - 11.86	2.74

Data Plot and Equation

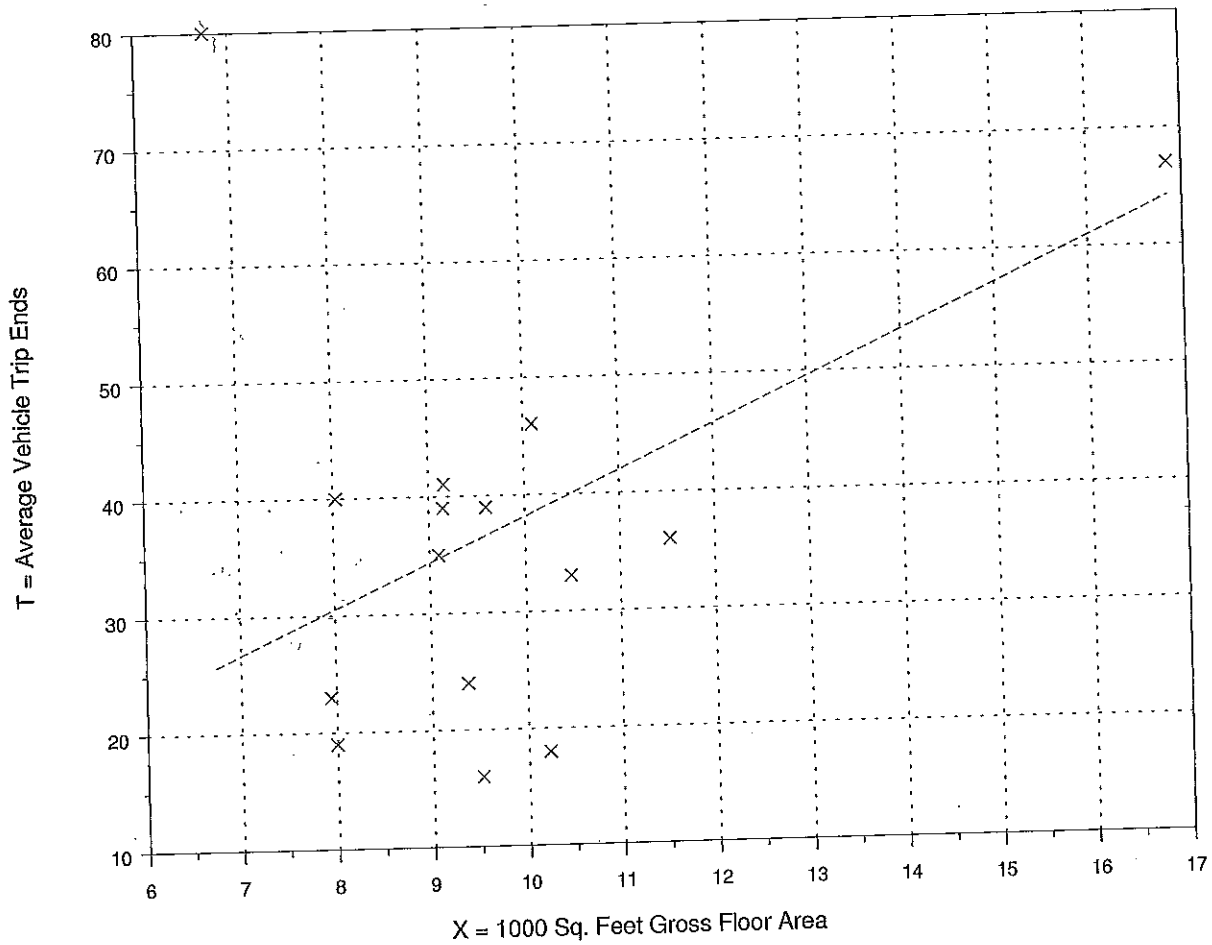

× Actual Data Points

------ Average Rate

R^2 = ****

Fitted Curve Equation: Not given

Variety Store
(814)

Average Vehicle Trip Ends vs: 1000 Sq. Feet Gross Floor Area
On a: Weekday,
Peak Hour of Adjacent Street Traffic,
One Hour Between 4 and 6 p.m.

Number of Studies: 15
Average 1000 Sq. Feet GFA: 10
Directional Distribution: Not available

Trip Generation per 1000 Sq. Feet Gross Floor Area

Average Rate	Range of Rates	Standard Deviation
6.82	3.15 - 13.94	3.80

Data Plot and Equation

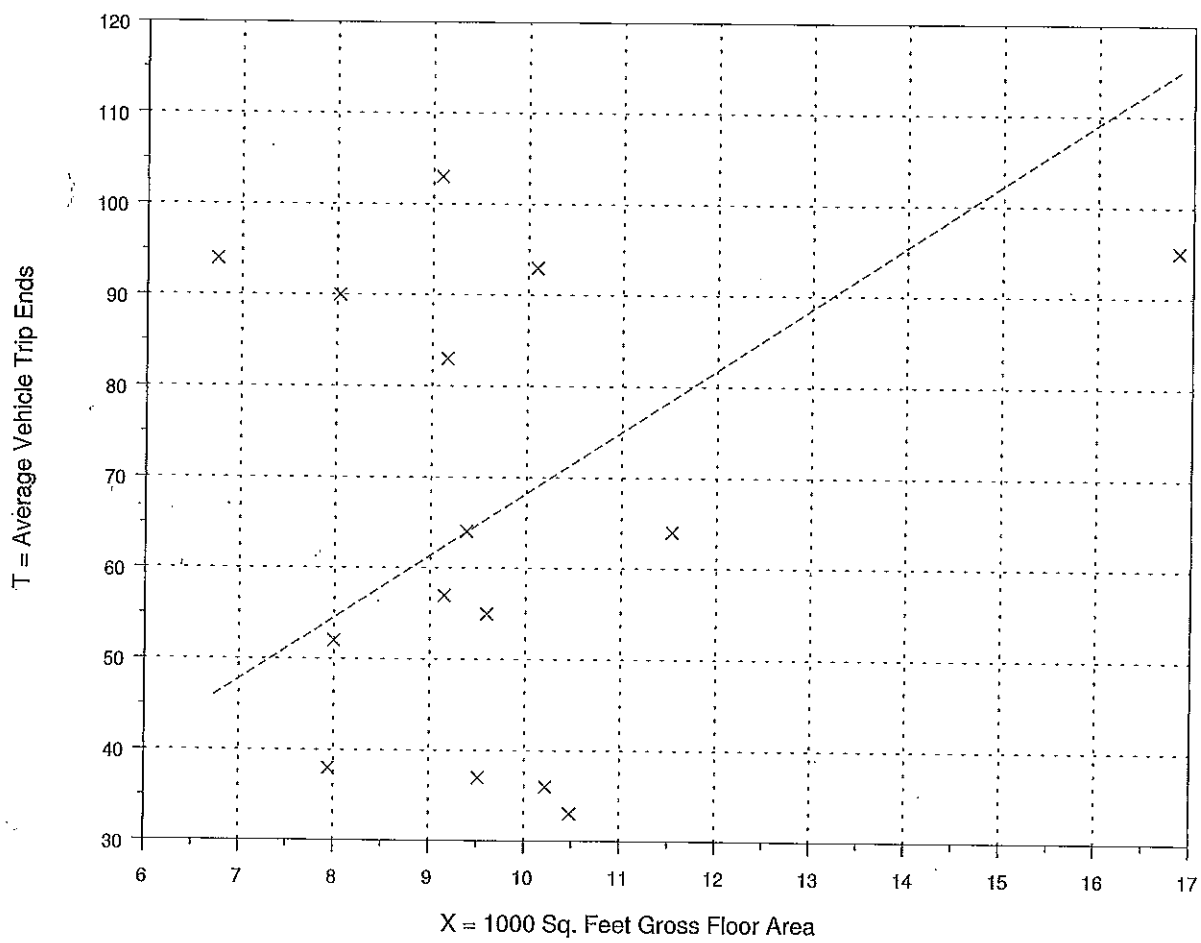

× Actual Data Points

------ Average Rate

Fitted Curve Equation: Not given

R^2 = ****

APPENDIX D

FDOT PRE-APPROVAL LETTER

Centennial FDOT 1915 ★ 2015

Florida Department of Transportation

RICK SCOTT
GOVERNOR

3400 West Commercial Blvd.
Fort Lauderdale, FL 33309

JIM BOXOLD
SECRETARY

November 9, 2016

THIS PRE-APPLICATION LETTER IS **EXTENDED** UNTIL – **November 9, 2017**
THIS LETTER IS NOT A PERMIT APPROVAL

Jason Gunther
Thomas Engineering Group Inc
250 W. Indiantown Road, Suite 206
Jupiter, Florida 33458

Dear Mr. Gunther:

RE: **November 9, 2016 -** Pre-application **Extension** for **Category D Driveway,** Date of Pre-application Meeting: **August 20, 2015**
Palm Beach County - City of Riviera Beach, (Urban) SR 708 Sec. # 93012; MP – 2.76
Access Class - 05 Posted Speed – 40 mph SIS - N
Request: Right in and right out driveway 290 feet east of Australian Avenue.

SITE SPECIFIC INFORMATION

Project Name & Address: **Family Dollar/ Equitas**
Applicant: Jason Gunther – Engineering Consultant Property Owner: Shimonovitc Shraga
Parcel Size: **1.92 Acres** Max. Sq.ft: 16,000 Proposed LU: Commercial

WE APPROVE YOUR REQUEST

This decision is based on your presentation of the facts, site plan and survey - please see the **conditions** and **comments** below. You may choose to review this concept further with the District Access Management Review Committee (AMRC).

Conditions: - A minimum driveway length of 25 feet, as measured from the ultimate right-of-way line to the first conflict point shall be provided.
- A traffic study is required prior to permit to determine if a right turn lane would be required.

Comments: - None.

- Drainage mitigation is required for any impacts within FDOT right-of-way (i.e. increased runoff or reduction of existing storage). A Storm Water Pollution Prevention Plan must be submitted with the application for more than one acre of "disturbed area" as defined by the Florida Department of Environmental Protection (FDEP).
- The applicant shall donate the right-of-way to the Department if right-of-way dedication is required to implement the improvements,
- All driveways not approved in this letter must be fully removed and the area restored.
- Dimensions between driveways are measured from the near edge of pavement to near edge of pavement and for median openings are measured from centerline to centerline unless otherwise indicated.

The purpose of this Pre-Application letter is to document the conceptual review of the approximate location of driveway(s) to the State Highway system and to note required improvements, if any. This letter shall be submitted with any further reviews and for permitting. The Department's personnel shall review permit plans for compliance with this letter as well as current Department standards and/or specifications. Final design must consider the existing roadway profile and any impacts to the existing drainage system. **Note, this letter does not guarantee permit approval.** The permit may be denied based on the review of the submitted engineering plans. Be aware that any approved median openings may be modified (or closed) in the future, at the sole discretion of the Department. For right-of-way dedication requirements go to: https://gis.dot.state.fl.us/OneStopPermitting; click on Statewide Permit News; Scroll down to District 4; Scroll down to Additional Information and Examples and choose Right-of-way Donations/Dedications.

Please contact Geysa Sosa, P.E. at the District Permits Office with any questions regarding permits – Tel. # 954-777-4377, Fax # 954-677-7893 or e-mail: geysa.sosa@dot.state.fl.us

Sincerely,

Dalila Fernandez, P.E.
District Traffic Access Manager

GS/nyh
cc: Jerry Dean
File: S:\Transportation Operations\Traffic Operations\Access Management\1. Pre-Apps and Variance\2015-08-20\5. 93012 MP 2.76 SR 708_Family Dollar - City of Riviera Beach\93012 MP 2.760 SR 708_Family Dollar_Equitas.doc

Centennial FDOT 1915 ★ 2015

Florida Department of Transportation

RICK SCOTT
GOVERNOR

3400 West Commercial Blvd.
Fort Lauderdale, FL 33309

JIM BOXOLD
SECRETARY

AUGUST 20, 2015

THIS PRE-APPLICATION LETTER IS VALID UNTIL – **AUGUST 20, 2016**
THIS LETTER IS NOT A PERMIT APPROVAL

Jason Gunther
Thomas Engineering Group Inc
250 W. Indiantown Road, Suite 206
Jupiter, Florida 33458

Dear Mr. Gunther:

RE: **August 20, 2015 -** Pre-application Meeting for **Category D Driveway**
Palm Beach County - City of Riviera Beach, (Urban) SR 708 Sec. # 93012; MP – 2.76
Access Class - 05 Posted Speed – 40 mph SIS - N
Request: Right in and right out driveway 290 feet east of Australian Avenue.

SITE SPECIFIC INFORMATION
Project Name & Address: **Family Dollar/ Equitas**
Applicant: Jason Gunther – Engineering Consultant Property Owner: Shimonovitc Shraga
Parcel Size: **1.92 Acres** Max. Sq.ft: 16,000 Proposed LU: Commercial

WE APPROVE YOUR REQUEST

This decision is based on your presentation of the facts, site plan and survey - please see the **conditions** and **comments** below.. You may choose to review this concept further with the District Access Management Review Committee (AMRC).

Conditions: - A minimum driveway length of 25 feet, as measured from the ultimate right-of-way line to the first conflict point shall be provided.
- A traffic study is required prior to permit to determine if a right turn lane would be required.

Comments: - None.

- Drainage mitigation is required for any impacts within FDOT right-of-way (i.e. increased runoff or reduction of existing storage). A Storm Water Pollution Prevention Plan must be submitted with the application for more than one acre of "disturbed area" as defined by the Florida Department of Environmental Protection (FDEP).
- The applicant shall donate the right-of-way to the Department if right-of-way dedication is required to implement the improvements,
- All driveways not approved in this letter must be fully removed and the area restored.
- Dimensions between driveways are measured from the near edge of pavement to near edge of pavement and for median openings are measured from centerline to centerline unless otherwise indicated.

The purpose of this Pre-Application letter is to document the conceptual review of the approximate location of driveway(s) to the State Highway system and to note required improvements, if any. This letter shall be submitted with any further reviews and for permitting. The Department's personnel shall review permit plans for compliance with this letter as well as current Department standards and/or specifications. Final design must consider the existing roadway profile and any impacts to the existing drainage system. **Note, this letter does not guarantee permit approval.** The permit may be denied based on the review of the submitted engineering plans. Be aware that any approved median openings may be modified (or closed) in the future, at the sole discretion of the Department. For right-of-way dedication requirements go to: https://gis.dot.state.fl.us/OneStopPermitting; click on Statewide Permit News; Scroll down to District 4; Scroll down to Additional Information and Examples and choose Right-of-way Donations/Dedications.

Please contact Geysa Sosa, P.E. at the District Permits Office with any questions regarding permits – Tel. # 954-777-4377, Fax # 954-677-7893 or e-mail: geysa.sosa@dot.state.fl.us

Sincerely,

Dalila Fernandez, P.E.
District Traffic Access Manager

GS/nyh
cc: Jerry Dean
File: s:\Permits\Pre-app Letters\Palm Beach County\Jason Gunther – Engineering Consultant – SR 708

STAFF REPORT – CITY OF RIVIERA BEACH
EQUITAS MANAGEMENT GROUP, LLC.
THOMAS ENGINEERING GROUP, LLC. SP-16-16
PLANNING AND ZONING BOARD – MARCH 23, 2017

AN APPLICATION FROM EQUITAS MANAGEMENT GROUP, LLC. AND THOMAS ENGINEERING GROUP, LLC. (SP-16-16) REQUESTING SITE PLAN APPROVAL TO DEVELOP A SINGLE STORY 8,247 SQUARE FOOT RETAIL BUILDING ON 0.92 ACRE OF 1.93 ACRES OF VACANT COMMERCIAL LAND LOCATED AT PARCEL CONTROL NUMBER 56-43-42-28-31-015-0010.

A. Applicant: Equitas Management Group, LLC. (authorized agent)
Thomas Engineering Group, LLC. (authorized agent)

B. Request: The applicant is requesting site plan approval to develop a single story 8,247 square foot retail building on 0.92 acre of the 1.93 acres of vacant commercial land on Parcel Control Number 56-43-42-28-31-015-0010.

C. Location: The proposed development is located at Parcel Control Number 56-43-42-28-31-015-0010 south of W. Blue Heron Boulevard, west of Avenue L, and east of Australian Avenue (see attached location map).

D. Property Description and Uses: The subject property description and uses are as follow:

Parcel Control Number:	56-43-42-28-31-015-0010;
Parcel Size:	±1.93 acres (84,010.78 square feet); proposed development will be ±0.92 acre (39,978 square feet)
Existing Use:	Vacant commercial land;
Zoning:	General Commercial (CG); and
Future Land Use:	Commercial (COM).

E. Adjacent Property Description and Uses:

North: Vacant commercial uses; Commercial (COM) Future Land Use and General Commercial (CG) Zoning.

South: Community facility uses (Riviera Beach Public Works facility); Community Facilities Future Land Use and Community Facility (CF) Zoning.

East: Industrial uses; Commercial (COM) Future Land Use and General Commercial (CG) Zoning.

West: Industrial uses; Industrial (IND) Future Land Use and Limited Industrial (IL) Zoning.

F. Background:

Shimonovitc Shraga F Trust owns the property referenced as Parcel Control Number 56-43-42-28-31-015-0010, which is a vacant commercial 1.93 acres parcel. Shimonovitc Shraga F Trust has authorized Equitas Management Group, LLC. and Thomas Engineering Group, LLC. to serve as the authorized agent for the parcel at Parcel Control Number 56-43-42-28-31-015-0010.

On September 29, 2016, Equitas Management Group, LLC. and Thomas Engineering Group, LLC. submitted the official Site Plan application (SP-16-16) to Staff. City Departmental Staff reviewed the Site Plan application and provided corresponding comments to the applicant. All comments were addressed by the applicant and City Staff has no objections to the Site Plan application.

To facilitate the development proposal by Equitas Management Group, LLC. and Thomas Engineering Group, LLC., the applicant is also requesting a re-plat approval (PA-16-05) of the parcel at Parcel Control Number 56-43-42-28-31-015-0010 (0.92 acre will be used for the proposed 8,247 square feet retail building and the remaining 1.01 acres will be used for future development that's consistent with and compatible to the uses permitted within the General Commercial (CG) Zoning District and Commercial (COM) Future Land Use District).

The Community Development Department reviewed the Site Plan application (SP-16-16) for compatibility and consistency with the City's Comprehensive Plan and Land Development Regulations and found that the proposed plan was in compliance.

An overview of Staff's analysis is featured below.

G. Staff Analysis:

Proposed Development/Use: The applicant is proposing to build a single story 8,247 square foot retail building on 0.92 acre of the 1.93 acres of vacant commercial land at Parcel Control Number 56-43-42-28-31-015-0010.

Zoning Regulations: This applicant's proposed use as a single story 8,247 square foot retail building is consistent with the uses permitted in the General Commercial (CG) Zoning District as defined in the City's Land Development Regulations.

Comprehensive Plan: The applicant's proposed use is consistent with the permitted Commercial (COM) Future Land Use designation established in the City's Comprehensive Plan.

Compatibility: The applicant's proposed project is compatible with the surrounding parcels.

Levels of Service: City services such as roads, water, sewer, and garbage collection are currently available to the site.

Landscaping: The applicant's proposed landscape plan is compatible with the City's Land Development Regulations.

Parking/Traffic: Adequate parking has been proposed by the applicant in accordance with the City's Land Development Regulations.

H. Recommendation: City staff advises that the Planning and Zoning Board review and consider all information presented and provide a recommendation to the City Council. If the Planning and Zoning Board chooses to recommend approval, City staff recommends including the following conditions of approval:

1. A two-year landscaping performance bond for 110% of the value of landscaping and irrigation shall be required before the certificate of occupancy is issued.
2. Construction must be initiated within 18 months of the effective date of the adopting Resolution in accordance with Section 31-60(b), of the City Code of Ordinances. Demolition, site preparation or land clearing shall not be considered construction. Building permit application and associated plans and documents shall be submitted in its entirety and shall not be accepted by City staff in a partial or incomplete manner.
3. All future advertising must state that the development is located in the City of Riviera Beach. Fees and penalties in accordance with City Code Sec. 31-554 will be levied against the property owner and/or business for violation of this condition.
4. This development must receive final Certificate of Occupancy from the City for all buildings and units approved within five years of the approval of the adopting resolution or the adopting resolution shall be considered null and void, requiring the applicant to resubmit application for site plan approval and re-initiate the site plan approval process.
5. Once approved, the adopting resolution shall supersede any previous site plan approval resolutions associated with this property, causing previous site plan approval resolutions to be null and void.
6. Once approved, the City Council authorizes City staff to approve future amendments to this site plan administratively so long as the site plan does not deviate greater than 5% from the originally approved submittal.

The Palm Beach Post

Palm Beach Daily News | ideabar

RECEIPT

Account:	G790	Phone:	561-845-4000
Name:	CITY OF RIVIERA BEACH	E-mail:	ap@rivierabch.com
Address:	10682 PO DRAWER RIVIERA BEACH FL 33419-0682		

Order Name:	Notice
Order Id:	730960
Original Order Id:	
Copy Line:	PUBLIC HEARING NOTICECITY OF RIVIERA BEA
Sales Rep:	PB116 R Hindmarch (P)
Purchase Order:	
Pay Type:	Billed
Account Group:	
Caller:	DeAndrae Spradley
Section:	6205 Legal Notices
Reply Request:	
Tear Sheets:	0

Order Summary

Base:	$261.44
Other Charges:	$0.00
Discounts:	$0.00
Agency Commission:	$0.00
Sales Tax:	$0.00
Total Order	$261.44

Payment Summary

No payment information available.

The Palm Beach Post

Palm Beach Daily News | ideabar

RECEIPT

Ad Name: 1439742A

Ad Id: 1439742

Original Ad Id:

Start:	04/19/2017
Stop:	04/19/2017
Issues:	1
Words:	351
Dimensions:	1 X 76
Color:	

Editions
PB Post
PB Post Web

The Palm Beach Post

Palm Beach Daily News | ideabar

RECEIPT

PUBLIC HEARING NOTICE
CITY OF RIVIERA BEACH, FLORIDA

The City Council will conduct a public hearing on Wednesday, May 3, 2017 at 6:00 p.m. or soon thereafter,and from time to time thereafter as necessary, in the Council Chambers at the Municipal Complex, 600 West Blue Heron Blvd., Riviera Beach, FL, to review the following resolutions and ordinances:

1. A RESOLUTION OF THE CITY COUNCIL OF THE CITY OF RIVIERA BEACH, PALM BEACH COUNTY, FLORIDA, APPROVING THE PLAT ENTITLED "AVENUE L RETAIL AT AUSTRALIAN AND BLUE HERON", TOTALING APPROXIMATELY 1.93 ACRES, LOCATED AT PARCEL CONTROL NUMBER 56-43-42-28-31-015-0010; AUTHORIZING THE MAYOR, CITY CLERK, AND CITY ENGINEER TO SIGN THE PLAT ENTITLED "FAMILY DOLLAR STORE AT AUSTRALIAN AND BLUE HERON"; AND PROVIDING AN EFFECTIVE DATE.

2. A RESOLUTION OF THE CITY COUNCIL OF THE CITY OF RIVIERA BEACH, PALM BEACH COUNTY, FLORIDA, APPROVING AN APPLICATION FROM THE EQUITAS MANAGEMENT GROUP, LLC. AND THOMAS ENGINEERING GROUP, LLC. FOR SITE PLAN APPROVAL TO DEVELOP A SINGLE STORY 8,247 SQUARE FOOT RETAIL BUILDING ON 0.92 ACRE OF 1.93 ACRES OF VACANT COMMERCIAL LAND LOCATED AT PARCEL CONTROL NUMBER 56-43-42-28-31-015-0010; AND PROVIDING FOR AN EFFECTIVE DATE.

Background material is available for review in its entirety in the Community Development Department between the hours of 8:30 AM and 5:00 PM, Monday through Friday, except holidays.

PLEASE TAKE NOTICE AND BE ADVISED, that if any interested person desires to appeal any decision made by the Board or Council with respect to any matter considered at the meetings, such interested person, at own expense, will need a record of the proceedings, and for such purpose may need to ensure that a verbatim record of the proceedings is made, which record includes the testimony and evidence upon which the appeal is to be based.

In accordance with the Americans with Disabilities Act of 1990, persons needing special accommodations to participate in the proceedings should contact the Legislative Aide at 561-845-4095 no later than 96 hours prior to the proceedings. If hearing impaired, telephone the Florida Relay Services 1-800-955-8771 (TDD) or 1-800-955-8770 (Voice) for assistance.

PUB: The Palm Beach Post
3-19/ 2017 #730960

The Palm Beach Post

Palm Beach Daily News | ideabar

RECEIPT

Ad shown is not actual print size.

CITY OF RIVIERA BEACH CITY COUNCIL
AGENDA ITEM SUMMARY

Meeting Date: 5/3/2017

Agenda Category: PUBLIC HEARING RESOLUTION

Subject: A RESOLUTION OF THE CITY COUNCIL OF THE CITY OF RIVIERA BEACH, PALM BEACH COUNTY, FLORIDA, APPROVING THE PLAT ENTITLED "AVENUE L RETAIL AT AUSTRALIAN AND BLUE HERON", TOTALING APPROXIMATELY 1.93 ACRES, LOCATED AT PARCEL CONTROL NUMBER 56-43-42-28-31-015-0010; AUTHORIZING THE MAYOR, CITY CLERK, AND CITY ENGINEER TO SIGN THE PLAT ENTITLED "AVENUE L RETAIL STORE AT AUSTRALIAN AND BLUE HERON"; AND PROVIDING AN EFFECTIVE DATE.

Recommendation/Motion: Staff is recommending the City Council to consider the information presented and the applicant's request for plat approval.

Originating Dept	Community Development	**Costs**	$261.44
User Dept.	Community Development	**Funding Source**	
Advertised	Yes	**Budget Account Number**	
Date	4/19/17		
Paper	Palm Beach Post		
Affected Parties	Notified		

Background/Summary:

Shimonovitc Shraga F Trust owns the property referenced as Parcel Control Number 56-43-42-28-31-015-0010, which is a vacant commercial 1.93 acres parcel. Shimonovitc Shraga F Trust has authorized Equitas Management Group, LLC. and Thomas Engineering Group, LLC. to serve as the authorized agent for the parcel at Parcel Control Number 56-43-42-28-31-015-0010.

On September 29, 2016, Equitas Management Group, LLC. and Thomas Engineering Group, LLC. submitted the official Plat application (PA-16-05) to Staff. City Departmental Staff reviewed the Plat application and provided corresponding comments to the applicant. All comments were addressed by the applicant and City Staff has no objections to the Plat application.

On April 13, 2017, the City's Planning and Zoning Board held a public meeting to discuss Equitas Management Group, LLC. and Thomas Engineering Group, LLC. Plat Application (PA-16-05). The Planning and Zoning Board recommended approval of the PA-16-05 Plat Application to City Council by a vote of 3 to 1, with Board Member Sheppard dissenting.

Fiscal Years
Capital Expenditures
Operating Costs
External Revenues
Program Income (city)
In-kind Match (city)
Net Fiscal Impact
NO. Additional FTE Positions (cumulative)

III. Review Comments

A. Finance Department Comments:

B. Purchasing/Intergovernmental Relations/Grants Comments:

C. Department Director Review:

Contract Start Date

Contract End Date

Renewal Start Date

Renewal End Date

Number of 12 month terms this renewal

Dollar Amount

Contractor Company Name

Contractor Contact

Contractor Address

Contractor Phone Number

Contractor Email

Type of Contract

Describe

ATTACHMENTS:

File Name	Description	Upload Date	Type
Resolution_Equitas_Management_Group_Plat_(PA-16-05).docx	Resolution Equitas Management Group Plat (PA-16-05)	4/17/2017	Resolution
Uniform_Land_Use_applicaiton_and_project_narrative.pdf	Equitas Management Group Uniform Land Use Application and Narrative	4/17/2017	Backup Material

AVENUE_L_RETAIL_PLAT_3-3-2017.pdf	Exhibit A Equitas Management Group Plat	4/17/2017	Exhibit
Map_Request_Equitas_Retail_site_location_map.pdf	Equitas Management Group Plat Site Location Map	4/17/2017	Backup Material
Map_Request_Equitas_Retail_aerial_map.pdf	Equitas Management Group Plat Aerial Map	4/17/2017	Backup Material
PA-16-05_Equitas_Retail_Staff_Report_3_23_2017.pdf	P&Z Staff report	4/17/2017	Backup Material
Legal_ad_for_May32017_City_Council_meeting.pdf	Legal ad	4/17/2017	Backup Material

REVIEWERS:

Department	**Reviewer**	**Action**	**Date**
Community Development	Bailey, Terrance	Approved	4/20/2017 - 10:38 AM

RESOLUTION NO. _____

A RESOLUTION OF THE CITY COUNCIL OF THE CITY OF RIVIERA BEACH, PALM BEACH COUNTY, FLORIDA, APPROVING THE PLAT ENTITLED "AVENUE L RETAIL AT AUSTRALIAN AND BLUE HERON", TOTALING APPROXIMATELY 1.93 ACRES, LOCATED AT PARCEL CONTROL NUMBER 56-43-42-28-31-015-0010; AUTHORIZING THE MAYOR, CITY CLERK, AND CITY ENGINEER TO SIGN THE PLAT ENTITLED "AVENUE L RETAIL STORE AT AUSTRALIAN AND BLUE HERON"; AND PROVIDING AN EFFECTIVE DATE.

WHEREAS, the property referenced by Parcel Control Number 56-43-42-28-31-015-0010 is approximately 1.93 acres and owned by Shimonovitc Shraga F Trust; and

WHEREAS, Shimonovitc Shraga F Trust has authorized Equitas Management Group, LLC. and Thomas Engineering Group, LLC. to serve as the authorized agent for the parcel at Parcel Control Number 56-43-42-28-31-015-0010; and

WHEREAS, the Equitas Management Group, LLC. and Thomas Engineering Group, LLC. desire to develop a single story 8,247 square foot retail building on 0.92 acre of the 1.93 acres of vacant commercial land on Parcel Control Number 56-43-42-28-31-015-0010; and

WHEREAS, the City received an application for plat approval (PA-16-05) named "Avenue L Retail at Australian and Blue Heron" from the Equitas Management Group, LLC. and Thomas Engineering Group, LLC. to replat 1.93 acres of land at Parcel Control Number 56-43-42-28-31-015-0010 to build a single story 8,247 square foot retail building on 0.92 acre of the 1.93 acres of vacant commercial land; and

WHEREAS, on April 13, 2017, the City's Planning and Zoning Board held a public meeting to discuss the Equitas Management Group, LLC. and Thomas Engineering Group, LLC. plat application proposal and recommended approval of the proposed plat application proposal by a 3 to 1 vote, with Board member Sheppard dissenting; and

WHEREAS, the Avenue L Retail at Australian and Blue Heron Plat complies with the City's Code of Ordinances and with Florida Statutes; and

WHEREAS, the City Council desires to approve the Avenue L Retail at Australian and Blue Heron Plat, attached hereto as Exhibit A.

NOW, THEREFORE, BE IT RESOLVED BY THE CITY COUNCIL OF THE CITY OF RIVIERA BEACH, PALM BEACH COUNTY, FLORIDA AS FOLLOWS:

SECTION 1. That the City Council hereby approves the plat entitled "Avenue L Retail at Australian and Blue Heron", attached hereto and archived as part of this resolution as Exhibit A.

SECTION 2. The Mayor, City Clerk and City Engineer are hereby authorized to sign the plat entitled "Avenue L Retail at Australian and Blue Heron".

SECTION 3. This Resolution shall take effect immediately upon approval.

PASSED and APPROVED this _____day of _____, 2017.

[REMAINDER OF PAGE INTENTIONALLY BLANK.]

APPROVED:

_____
THOMAS A. MASTERS
MAYOR

_____
TERENCE D. DAVIS
CHAIRPERSON

ATTEST:

_____
CLAUDENE L. ANTHONY
CERTIFIED MUNICIPAL CLERK
CITY CLERK

_____
KASHAMBA MILLER-ANDERSON
CHAIR PRO TEM

_____
LYNNE L. HUBBARD
COUNCILPERSON

_____
TONYA DAVIS JOHNSON
COUNCILPERSON

_____
DAWN S. PARDO
COUNCILPERSON

MOTIONED BY: _____

SECONDED BY: _____

L. HUBBARD _____

K. MILLER-ANDERSON _____

T. DAVIS JOHNSON _____

D. PARDO _____

T. DAVIS _____

REVIEWED AS TO LEGAL SUFFICIENCY

ANDREW DEGRAFFENREIDT, ESQ.
CITY ATTORNEY

DATE: _____

For Staff Use Only

City of Riviera Beach	Date:	Case Number:
Community Development Department 600 W. Blue Heron Boulevard Riviera Beach, Florida 33404	Project Title:	
	Fee Paid:	Notices Mailed:
Phone: (561) 845-4060 Fax : (561) 845-4038	1st Hearing:	2nd Hearing:
	Publication Dates (if required)	

UNIFORM LAND USE APPLICATION

(Please attach separate sheet of paper for required additional information)

Complete appropriate sections of Application and sign.

APPLICANT

Name of Property Owner(s): Shimonovitc Shraga

Mailing Address: 21950 Town Place Dr, Boca Raton FL 33433

Property Address: Southwest corner Blue Heron Blvd and Avenue L

Name of Applicant (if other than owner): Jason Gunther, Thomas Engineering Group, LLC

Home: ( ) Work: (561) 203-7503 Fax: (954) 202-7000

E-mail Address: jgunther@thomaseg.com

PLEASE ATTACH LEGAL DESCRIPTION

PROPERTY

Future Land Use Map Designation: Com Current Zoning Classification: CG

Square footage of site: 40,177 Property Control Number (PCN): 56-43-42-28-31-015-0010

Type and gross area of any existing non residential uses on site: 8,247sf Retail

Gross area of any proposed structure:

Is there a current or recent use of the property that is/was in violation of City Ordinance? [ ] Yes [✓] No

If yes, please describe:

Have there been any land use applications concerning all or part of this property in the last 18 months? [ ] Yes [✓] No

If yes, indicate date, nature and applicant's name:

Briefly describe use of adjoining property: North: Vacant

South: Public Works Maintenance Yard

East: Atlas Sign Industries

West: Vacant

REZONE

Requested Zoning Classification:

Is the requested zoning classification contiguous with existing?

Is a Special Exception necessary for your intended use? [ ] Yes [ ] No

Is a Variance necessary for your intended use? [ ] Yes [ ] No

FUTURE LAND USE		
	Existing Use:	Proposed Use:
	Land Use Designation:	Requested Land Use:
	Adjacent Land Uses: North:	South:
	East:	West:
	Size of Property Requesting Land Use Change:	

SPECIAL EXCEPTION	
	Describe the intended use requiring a Special Exception:
	Provide specific LDR ordinance section number and page number:
	How does intended use meet the standards in the Land Development Code?
	Demonstrate that proposed location and site is appropriate for requested use:
	Demonstrate how site and proposed building(s) have been designed so they are compatible with adjacent uses and neighborhoods:
	Demonstrate any landscaping techniques to visually screen use from adjacent uses:
	Demonstrate what is proposed to reduce the impact of any potential hazards, problems, public nuisances generated by use:
	Demonstrate how utilities and other service requirements of the use can be met:
	Demonstrate how the impact of traffic generated will be handled: On-site:
	Off-Site:
	Other:

VARIANCE	
	Describe the Variance sought:
	Demonstrate that the Variance is needed to overcome a hardship caused by the unique physical conditions of the site:
	Specify the minimum Variance requirements including: height, lot area, size of structure, size of yard, setback, buffer or open space:
	Other:

SITE PLAN

Describe proposed development:
Construct a Retail Store with Support Parking

Demonstrate that proposed use is appropriate to site:
Retail is an permitted use within CG zoning district.

Demonstrate how drainage and paving requirement will be met:
Exfiltration trench will provide water quality and flood attenuation

Demonstrate any landscaping techniques to visually screen use from adjacent uses:
Buffers along streets will provide aesthetic corridor for public.

Demonstrate what is proposed to reduce the impact of any potential hazards, problems, public nuisances generated by use:
Hours of operation and location will provide minimal nuisance.

Demonstrate how utilities and other service requirements of the use can be met:
Water and sewer connection is available to site. Dumpster is proposed

Demonstrate how the impact of traffic generated will be handled:
On-site: Adequate parking is provided on-site
Off-site: Traffic study is provided.

OTHER

COMMUNICATION TOWER CO-LOCATION REQUIREMENTS:

- Three sets of signed and sealed Construction documents, elevations and all equipment shelters, cabinets, Coax, telephone and power conduits identified. These plans will then be used to obtain the Building Permit.
- Antenna manufacture cut sheets including antenna size and shape.
- Zoning map of area with site clearly marked.
- Photos of existing building or tower and surrounding uses.
- Letter of non-interference and FCC compliance from applicant's Radio Frequency Professional.
- Map of surrounding carrier existing locations in all directions with type i.e. Guyed, Self-Support, Monopole, Rooftop.
- Letter of structural capacity and building code compliance.
- Notes on plan or letter demonstrating floor area coverage not in excess of restrictions
- Provide Photo Enhancements of proposal.
- Statement that proposal is in compliance with Environmental Regulations prior to permit issue.

Confirmation of Information Accuracy

I hereby certify that the information on this application is correct. The information included in this application is for use by the City of Riviera Beach in processing my request. False or misleading information may be punishable by a fine of up to five hundred dollars ($500.00) and imprisonment of up to thirty (30) days and may result in the summary denial of this application.

Signature

9-26-16
Date

Shraga Shimonovitc
21950 Town Place Drive
Boca Raton, FL 33433

September 12, 2016

TO: All applicable Governmental Permitting Agencies
City of Riviera Beach, Florida
Palm Beach County, Florida
State of Florida

RE: **Authorization of Agent**

This will serve as confirmation that the undersigned Shraga Shimonovitc, the owner of the property located at Southwest corner of Blue Heron Blvd and Avenue L, Riviera Beach, Florida, identified by tax folio no. 56-43-42-28-31-015-0010 (the "Property"), hereby appoints Equitas Management Group, LLC and/or Thomas Engineering Group, LLC, to act as its authorized agent concerning all city, county, state and governmental agency permits and applications, but only to the extent that such permits and applications pertain to the proposed Avenue L Retail development at the Property.

Shraga Shimonovitc

STATE OF FLORIDA)
) ss.
COUNTY OF PALM BEACH)

The foregoing instrument was acknowledged before me this 23 day of Sept, 2016, by Shraga Shimonovitc. He/she ☐ is personally known to me or ☑ has produced drivers license as identification.

Print Name: Joan Richardson
NOTARY PUBLIC

My Commission Expires: Sept 13, 2017

JOAN RICHARDSON
MY COMMISSION # FF 017055
EXPIRES: September 13, 2017
Bonded Thru Notary Public Underwriters

AGENT AUTHORIZATION FORM

Owner(s) of Record: Shimonovitc Shraga

STATE OF FLORIDA
COUNTY OF PALM BEACH

BEFORE ME, the undersigned authority personally appeared Please see attached Letter of Authorization

who, being first duly sworn upon oath and personal knowledge say(s) that they are the owner(s) of record of the following described real property:

the street address of which is: Southwest corner Blue Heron Blvd + Avenue L

and that we hereby appoint:

Name: Equitas Management Group, LLC.
Address: 2034 Hamilton Place Blvd, Suite 400
Chattanooga, TN 37421
Telephone: 423-296-1791

as our authorized agent, to file applications and papers with the City of Riviera Beach, and to represent me (us) at any Hearing regarding my (our) interest.

_____ (Seal)

_____ (Seal)

_____ (Seal)

Sworn to and subscribed before me this _____ day of _____, _____.

_____
Notary Public

THOMAS
ENGINEERING GROUP

THOMAS ENGINEERING GROUP
125 W. INDIANTOWN RD., STE. 206
JUPITER, FL 33458
P: 561-203-7503
F: 561-203-7721

August 31, 2016

City of Riviera Beach

600 West Blue Heron Boulevard

Riviera Beach, FL 33404

Site Plan Approval Request – Avenue L Retail SWC Blue Heron Boulevard and Avenue L

Dear City Staff:

This project proposes an 8,247sf retail store positioned on site as to engage the adjacent roadways being Blue Heron Boulevard and Avenue L. Specifically the building placement is at the 20 foot setback of Blue Heron Boulevard and the 15 foot setback of Avenue L.

The site proposes two driveways, one off of Blue Heron Boulevard and a second on Avenue L. The Blue Heron Driveway is centered on the proposed parcel line for this property and a cross access easement will be provided for the benefit of this parcel and the vacant remainder of land to the west. Supporting parking is proposed on the parcel wherein the required parking is the sum of the retail and storage components of the building, totaling 38 spaces which is the number of provided spaces on the plan.

This parcel is located in the Blue Heron Boulevard Arterial Corridor and as such the building elevations have been designed with embellished architectural features. The prominent feature being a wraparound covered porch at the store entrance.

Pervious concrete is proposed in the parking bays adjacent to both Blue Heron Boulevard and the southern parcel line. These pervious paved area are proposed and designed to accommodate the 30% pervious requirement for commercial developments within the City's Comprehensive Plan.

The project proposes installing curb and gutter and a 5 foot concrete sidewalk along the frontage with Avenue L as an offsite improvement which will benefit the users both on foot and driving in this location.

There are ambitions by the property owner to develop the remaining portion of the undeveloped land in the near future however at this time the type of use proposed is not known. This plan has

THOMAS
ENGINEERING GROUP

THOMAS ENGINEERING GROUP
125 W. INDIANTOWN RD., STE. 206
JUPITER, FL 33458
P: 561-203-7503
F: 561-203-7721

been designed specific to the joint access on Blue Heron Boulevard in consideration of the future development potential of the site.

The proposed use is harmonious with the zoning district, arterial corridor and acts as a buffer from the users of Blue heron Boulevard to the Public Works maintenance facility located south of the site.

Sincerely,

THOMAS ENGINEERING GROUP, LLC

Jason M. Gunther, P.E.

Branch Manager

THOMAS
ENGINEERING GROUP

THOMAS ENGINEERING GROUP
125 W. INDIANTOWN RD., STE. 206
JUPITER, FL 33458
P: 561-203-7503
F: 561-203-7721

August 31, 2016

City of Riviera Beach

600 West Blue Heron Boulevard

Riviera Beach, FL 33404

Concurrency Compliance Avenue L Retail

Traffic Generation - The Average daily Trips form this retail store are calculated at 166.35 trips per 1,000sf per section 31-715 of the city's code. Therefore, the projected average daily trips form this store are 1,372 trips.

Sanitary Sewer - The daily sanitary sewer demand from this retail store is calculated at 0.10 gallons per square foot of floor space per section 31-717 of the city's code. Therefore, 825 gallons of sanitary waste are projected from this use.

Potable Water - The daily potable water demand from this retail store is calculated at 0.10 gallons per square foot of floor space per section 31-716 of the city's code. Therefore, 825 gallons of potable water are projected for this use.

Drainage – The project proposes exfiltration trench in a volume sufficient to provide complete storage within the trench for a 3 year 1 day storm. Project size of 0.90 acres does not require an NPDES permit however an Erosion Control Plan will be provided and implemented.

Solid Waste - This use most resembles a drug store use for solid waste generation. Solid waste generation is calculated as 5 pounds per day per 100 square feet of store area per section 31-718 of the city's code. Therefore this use is projected to generate 412 pounds per day of solid waste.

Sincerely,

THOMAS ENGINEERING GROUP, LLC

Jason M. Gunther, P.E.

Branch Manager

McMAHON
TRANSPORTATION ENGINEERS & PLANNERS

McMAHON ASSOCIATES, INC.
5500 Village Blvd | Suite 103 | West Palm Beach, FL 33407
p 561-840-8650 | f 561-840-8590
mcmahonassociates.com

PRINCIPALS
Joseph W. McMahon, P.E.
Joseph J. DeSantis, P.E., PTOE
John S. DePalma
William T. Steffens
Casey A. Moore, P.E.
Gary R. McNaughton, P.E., PTOE

ASSOCIATES
John J. Mitchell, P.E.
Christopher J. Williams, P.E.
R. Trent Ebersole, P.E.
Matthew M. Kozsuch, P.E.
Maureen Chlebek, P.E., PTOE

October 5, 2015

VIA E-MAIL

Mr. Hal R. Dodt, Director, Real Estate Florida
Equitas Management Group
5332 SW Orchid Bay Drive, Suite 200
Palm City, FL 34990

RE: Family Dollar Blue Heron Boulevard Traffic Analysis
McMahon Project No. M15578.01

Dear Mr. Dodt:

McMahon Associates, Inc. (McMahon) has completed a transportation engineering analysis associated with the development of a parcel located on the southwest corner of Blue Heron Boulevard and Avenue L, in the City of Riviera Beach. The proposed development, with an anticipated buildout year of 2017, will include an 8,000 square foot Family Dollar and 6,200 square feet of medical office space.

Trip Generation Analysis

Using information obtained from Palm Beach County and the Institute of Transportation Engineers (ITE), *Trip Generation Manual*, 9th Edition, trip generation estimates were developed for the proposed uses. **Table 1** summarizes the daily, AM peak hour and PM peak hour trips. Results of the analysis indicate that the proposed development is expected to generate 736 total daily trips, 45 total AM peak hour trips and 79 total PM peak hour trips. Pass-by reductions were based on information obtained from Palm Beach County. After accounting for pass-by traffic, the project is expected to generate 397 net new daily trips, 24 net new AM peak hour trips and 43 net new PM peak hour trips. Excerpts from ITE are attached in **Appendix A**.

Site Access

Access to the site is being proposed via a right-in/right-out driveway connection to Blue Heron Boulevard and a full access connection to Avenue L.

Project Distribution

The distribution of project traffic onto the surrounding roadway network, graphically shown on **Figure 1**, was based on the characteristics of the roadways adjacent to the project site, as well as existing travel patterns and land uses surrounding the project site. The project assignment, shown on Figure 1, was based on the trip generation and project distribution analyses. Based on the projected volumes at the proposed driveway connections, exclusive turn lanes are not required to access the project site at either driveway.

TABLE 1
TRIP GENERATION ANALYSIS
FAMILY DOLLAR BLUE HERON BOULEVARD TRAFFIC ANALYSIS

DAILY

LAND USE	ITE CODE	INTENSITY		TRIP GENERATION RATE [1]	IN	OUT	TOTAL TRIPS			PASS-BY[1]		NEW TRIPS		
							IN	OUT	TOTAL			IN	OUT	TOTAL
Family Dollar	814	8,000	SF	T = 64.03 (X)	50%	50%	256	256	512	317	62.00%	97	98	195
Medical Office	720	6,200	SF	T = 36.13 (X)	50%	50%	112	112	224	22	10.00%	101	101	202
TOTAL							368	368	736	339		198	199	397

AM PEAK HOUR

LAND USE	ITE CODE	INTENSITY		TRIP GENERATION RATE [1]	IN	OUT	TOTAL TRIPS			PASS-BY[1]		NEW TRIPS		
							IN	OUT	TOTAL			IN	OUT	TOTAL
Family Dollar	814	8,000	SF	T = 3.81 (X)	50%	50%	15	15	30	19	62.00%	6	5	11
Medical Office	720	6,200	SF	T = 2.39 (X)	79%	21%	12	3	15	2	10.00%	11	2	13
TOTAL							27	18	45	21		17	7	24

PM PEAK HOUR

LAND USE	ITE CODE	INTENSITY		TRIP GENERATION RATE [1]	IN	OUT	TOTAL TRIPS			PASS-BY[1]		NEW TRIPS		
							IN	OUT	TOTAL			IN	OUT	TOTAL
Family Dollar	814	8,000	SF	T = 6.82 (X)	50%	50%	28	27	55	34	62.00%	11	10	21
Medical Office	720	6,200	SF	Ln(T) = 0.90 Ln(X)+ 1.53	28%	72%	7	17	24	2	10.00%	5	17	22
TOTAL							35	44	79	36		16	27	43

Notes:

(1) Palm Beach County Trip Generation Rates, August 13, 2014 used for Medical office. ITE Trip Generation Manual, 9th Edition used for Family Dollar trip rate. Pass-by rate for Family Dollar based on Palm Beach County information.

McMAHON TRANSPORTATION ENGINEERS & PLANNERS

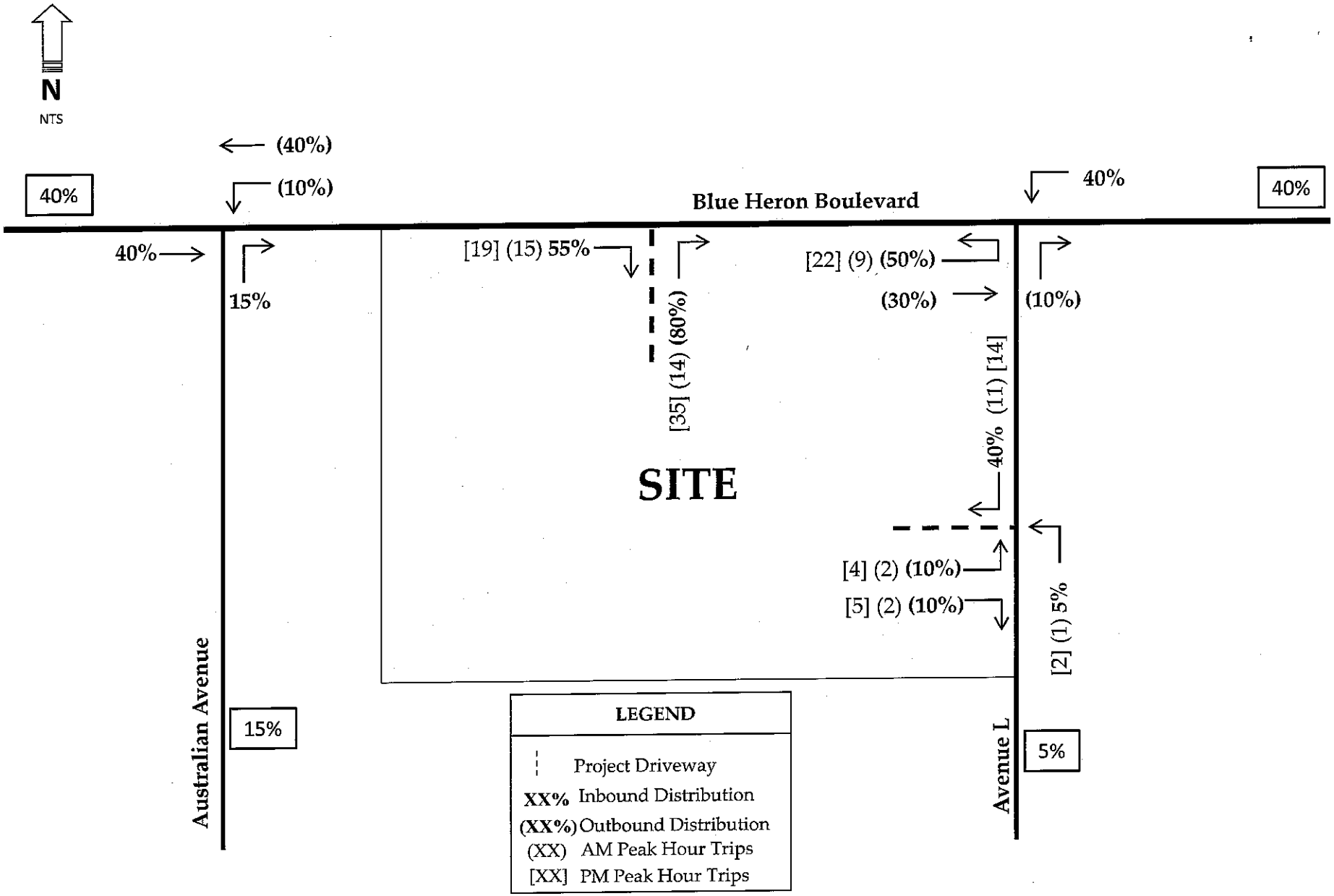

Figure 1
Project Distribution
Family Dollar Blue Heron Boulevard Traffic Analysis
Riviera Beach, Florida

McMAHON
TRANSPORTATION ENGINEERS & PLANNERS

Should you have any questions or comments regarding these findings, please do not hesitate to call me.

Sincerely,

9/2/16

Natalia Thais Lercari, P.E.
Professional Engineer
License No. 68205
State of Florida, Board of Professional Engineers
Certificate of Authorization No. 4908

NTL/amp
Enclosure

F:\FL\15578M_EQUITAS_FamilyDollarBlueHeron\15578M_01\Admin\LtrHD100515.doc

APPENDIX A

TRIP GENERATION RATES

Palm Beach County Trip Generation Rates

Cat	Landuse	ITE Code	Unit	Daily Rate/Equation	Pass-By %	AM Peak Hour In/Out	AM Peak Hour Rate/Equation	PM Peak Hour In/Out	PM Peak Hour Rate/Equation
Industrial	Light Industrial	110	1000 S.F.	6.97	10%	88/12	0.92	12/88	0.97
	Warehouse	150	1000 S.F.	3.56	10%	79/21	0.30	25/75	0.32
	Flex Space - IND FLU	PBC	1000 S.F.	7.86	10%	64/36	1.53	40/60	1.21
	Flex Space - COM FLU	PBC	1000 S.F.	29.67	45%	72/28	2.12	40/60	2.67
	Mini-Warehouse/SS	151	1000 S.F.	2.50	10%	55/45	0.14	50/50	0.26
Residential	Single Family Detached	210	Dwelling Unit	10	0%	25/75	0.75	63/37	Ln(T) = 0.90 Ln(X) + 0.51
	Apartment	220	Dwelling Unit	6.65	0%	20/80	T = 0.49(X) + 3.73	65/35	0.62
	Condo/TH (Fee Simple)	230	Dwelling Unit	6.65	0%	17/83	Ln(T) = 0.80 Ln(X) + 0.26	67/33	Ln(T) = 0.82 Ln(X) + 0.32
	55+ SF Detached	251	Dwelling Unit	3.68	0%	35/65	0.22	61/39	0.27
	55+ SF Attached	252	Dwelling Unit	3.44	0%	34/66	0.2	54/46	0.25
	Congregate Care Facility	253	Dwelling Unit	2.02	0%	59/41	0.06	55/45	0.17
	Assisted Living Facility	254	Beds	2.66	0%	65/35	0.14	44/56	0.22
Ldg	Hotel	310	Rooms	8.17	10%	59/41	0.53	51/49	0.6
Rec	Movie Theater	444	Seats	1.8	5%	N/A	0	60/40	0.144
	Health Club	492	1000 S.F.	32.93	5%	50/50	1.41	57/43	3.53
Institutional	Elementary School	520	Students	1.29	0%	55/45	0.45	49/51	0.15
	Middle/Junior School	522	Students	1.62	0%	55/45	0.54	49/51	0.16
	High School	530	Students	1.71	0%	68/32	0.42	47/53	0.13
	Private School (K-8)	534	Students	Use Private K-12 rate	0%	55/45	0.90	47/53	0.19
	Private School (K-12)	536	Students	2.48	0%	61/39	0.81	43/57	0.17
	Church/Synagogue[a]	560	1000 S.F.	9.11	5%	62/38	0.56	48/52	0.55
	Day Care	565	1000 S.F.	74.06	50%	53/47	12.18	47/53	12.34
	Library	590	1000 S.F.	56.24	10%	71/29	1.04	48/52	7.30
Med	Hospital	610	1000 S.F.	13.22	10%	63/37	0.95	38/62	0.93
	Nursing Home	620	beds	2.74	10%	69/31	0.17	33/67	0.22
Office	General Office	710	1000 S.F.	Ln(T) = 0.76 Ln(X) + 3.68	10%	88/12	Ln(T) = 0.80 Ln(X) + 1.57	17/83	1.49
	* Medical Office	720	1000 S.F.	36.13	10%	79/21	2.39	28/72	Ln(T) = 0.90 Ln(X) + 1.53
	Medical Office (Reduced)[b]	PBC	1000 S.F.	18.07	10%	79/21	1.2	27/73	T = 1/2 Med. Office PM
	Government Office	730	1000 S.F.	68.93	10%	84/16	1.16	31/69	1.21

Trip rates taken mostly from ITE Trip Generation Manual, 9th Edition except as noted.

August 13, 2014

F:\TRAFFIC\Development Review\Trip Generation\Trip Generation Rates for Web 8-13-2014

Palm Beach County Trip Generation Rates

Cat.	Landuse	ITE Code	Unit	Daily Rate/Equation	Pass-By %	AM Peak Hour In/Out	AM Peak Hour Rate/Equation	PM Peak Hour In/Out	PM Peak Hour Rate/Equation
Retail	Nursery (Wholesale)	818	acre	4.50	0%	N/A	0.26	N/A	0.45
	Gen. Commercial	820	1000 S.F.	Ln(T) = .65 Ln(X) + 5.83[a]	Note d	62/38	0.96	48/52	Ln(T) = 0.67 Ln(X) + 3.31[a]
	New Car Sales	841	1000 S.F.	32.30	15%	75/25	1.92	40/60	2.62
	Tire Store	848	1000 S.F.	24.87	28%	63/37	2.89	43/57	4.15
	Pharmacy + DT	881	1000 S.F.	96.91	50%	52/48	3.45	50/50	9.91
Services	Drive-In Bank[f]	912	1000 S.F.	148.15	47%	57/43	12.08	50/50	24.3
	Quality Restaurant	931	1000 S.F.	89.95	44%	50/50	0.81	67/33	7.49
	High Turnover Sit-Down Rest.	932	1000 S.F.	127.15	43%	55/45	10.81	60/40	9.85
	Fast Food Restaurant w/o DT	933	1000 S.F.	396.90	45%	60/40	43.87	51/49	26.15
	Fast Food Restaurant + DT	934	1000 S.F.	496.12	49%	51/49	45.42	52/48	32.65
	Gas Station	944	Fuel Positions	168.56	50%	50/50	12.16	50/50	13.87
	Convenience Store	851	1000 S.F.	737.99	61%	50/50	67.03	51/49	52.41
	Carwash (Automated)[g]	PBC	Lane	166.00	0%	50/50	11.97	50/50	13.65

Footnotes: a) Weekend peak hour rate = 12.04 per 1,000 s.f. with a 49/51 directional split
b) To be used only when adjacent to hospital, for Med. Office square footage not to exceed 44% of the hospital square footage
c) For intensities under 10,000 s.f., use a rate of 152.03 / 1,000 SF instead of the equation.
d) Pass-by percent = 62% for 10,000 sf or less, otherwise = 83.18 - 9.30 * Ln(A) where A is 1,000 s.f. of leasable area
e) For densities under 10,000 s.f., use a rate of 12.81 / 1,000 sf instead of the equation.
f) Use these rates for a drive-in bank with up to 4 drive-thru lanes (excl. ATM lane). For additional drive-thru lanes, use per lane rates from ITE Code 912 (139.25 daily, 9.29 AM, 33.24 PM. Use same in/out splits)
g) Daily rate taken from PBC trip gen. study. Peak hour rates derived by applying peak to daily ratios for gas station to daily carwash rate

Trip rates taken mostly from ITE Trip Generation Manual, 9th Edition except as noted.

Variety Store
(814)

Average Vehicle Trip Ends vs: 1000 Sq. Feet Gross Floor Area
On a: Weekday

Number of Studies: 15
Average 1000 Sq. Feet GFA: 10
Directional Distribution: 50% entering, 50% exiting

Trip Generation per 1000 Sq. Feet Gross Floor Area

Average Rate	Range of Rates	Standard Deviation
64.03	33.73 - 133.60	25.69

Data Plot and Equation

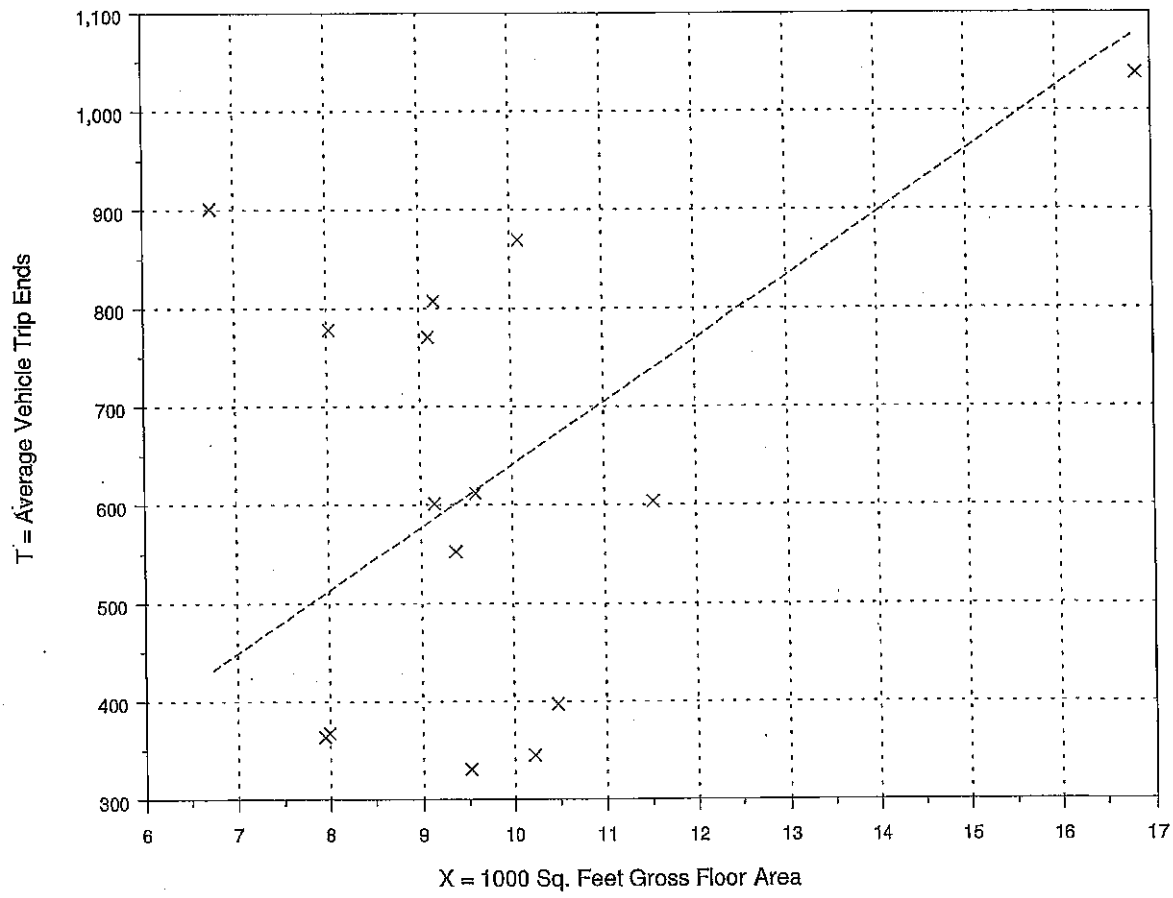

× Actual Data Points

------ Average Rate

Fitted Curve Equation: Not given

R^2 = ****

Variety Store
(814)

Average Vehicle Trip Ends vs: 1000 Sq. Feet Gross Floor Area
On a: Weekday,
Peak Hour of Adjacent Street Traffic,
One Hour Between 7 and 9 a.m.

Number of Studies: 15
Average 1000 Sq. Feet GFA: 10
Directional Distribution: Not available

Trip Generation per 1000 Sq. Feet Gross Floor Area

Average Rate	Range of Rates	Standard Deviation
3.81	1.68 - 11.86	2.74

Data Plot and Equation

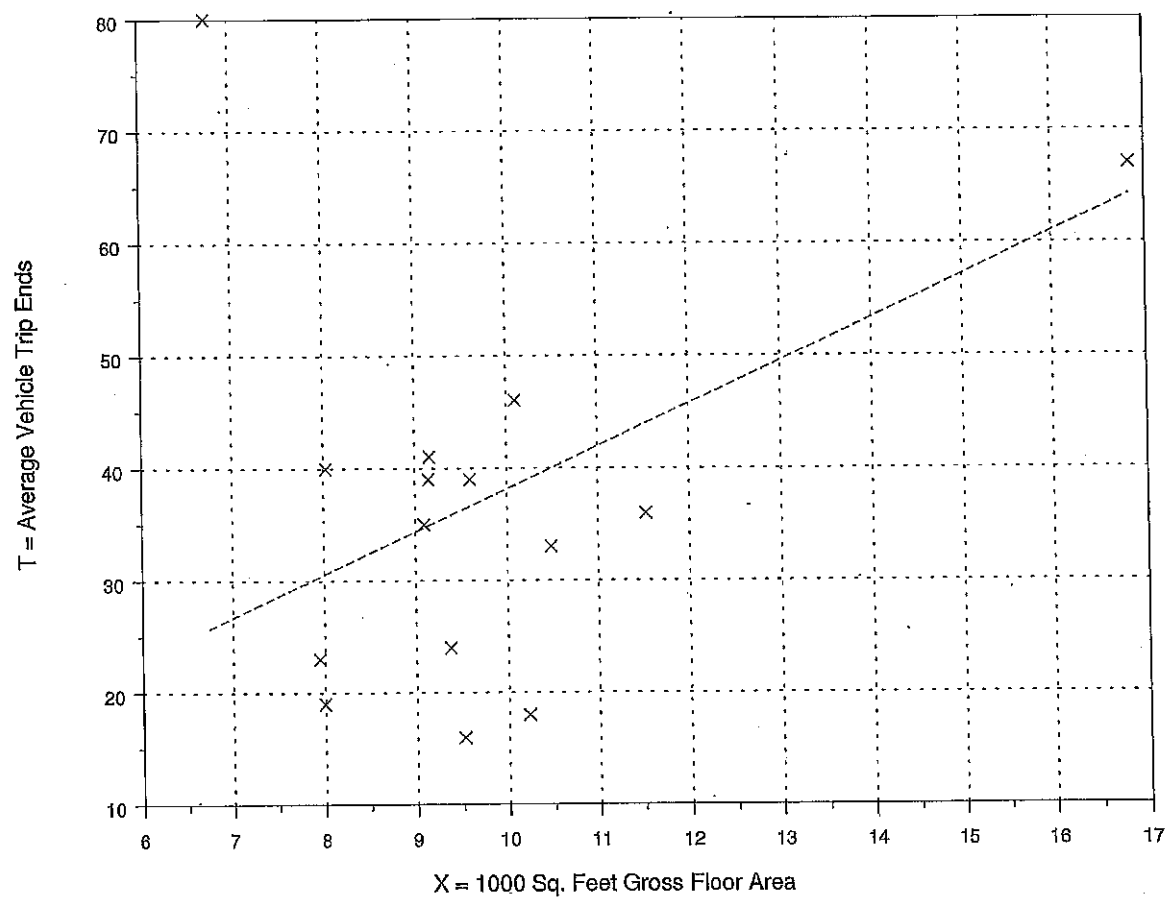

× Actual Data Points

------ Average Rate

Fitted Curve Equation: Not given

R^2 = ****

Variety Store
(814)

Average Vehicle Trip Ends vs: 1000 Sq. Feet Gross Floor Area
On a: Weekday,
Peak Hour of Adjacent Street Traffic,
One Hour Between 4 and 6 p.m.

Number of Studies: 15
Average 1000 Sq. Feet GFA: 10
Directional Distribution: Not available

Trip Generation per 1000 Sq. Feet Gross Floor Area

Average Rate	Range of Rates	Standard Deviation
6.82	3.15 - 13.94	3.80

Data Plot and Equation

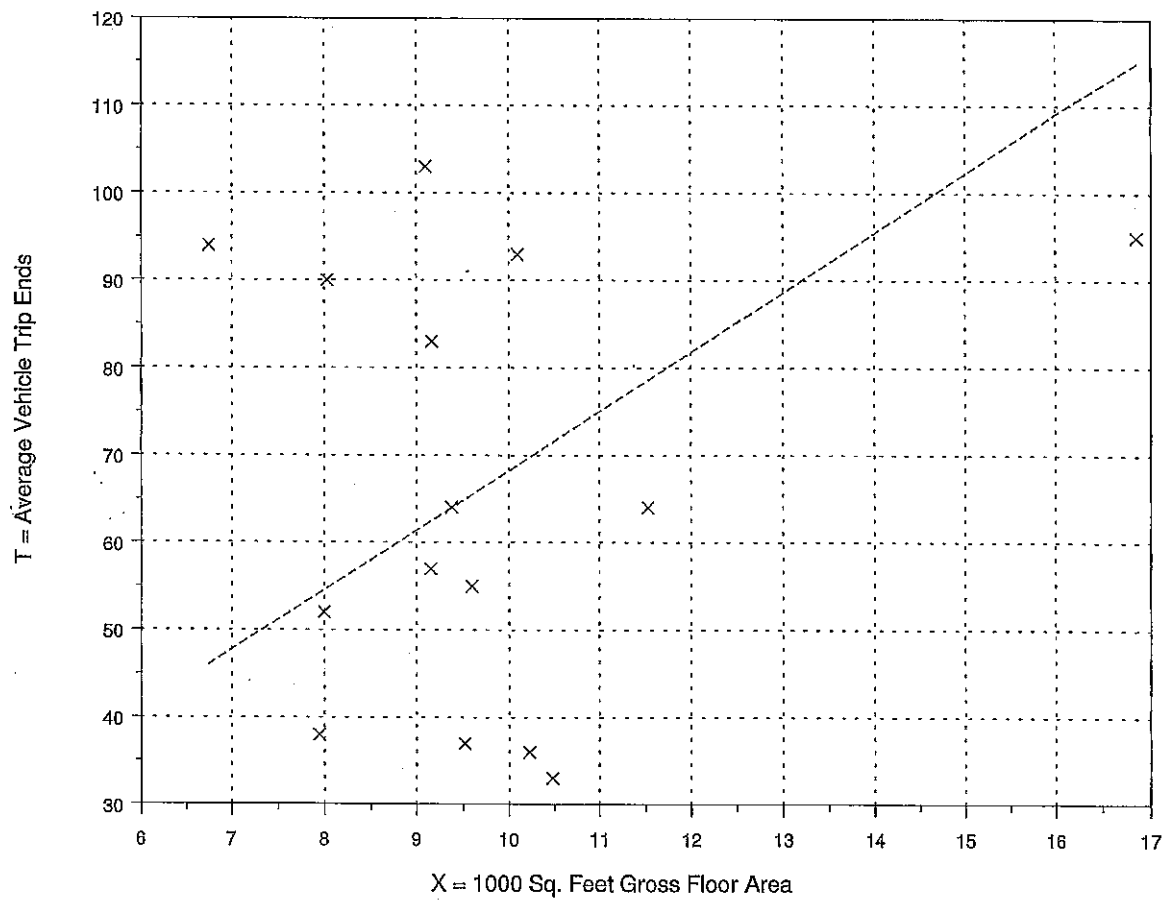

Fitted Curve Equation: Not given

R^2 = ****

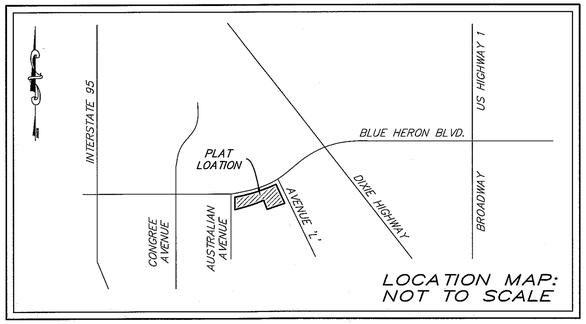

AVENUE 'L' RETAIL AT AUSTRALIAN AND BLUE HERON

LOTS 1 THROUGH 7, AND ALL OF LOT 8, LESS THE SOUTHERLY 160.19 FEET THEREOF, IN BLOCK 'O', OF REPLAT OF PLAT NO. 1, LEWIS TERMINALS, ACCORDING TO THE PLAT THEREOF, AS RECORDED IN PLAT BOOK 27, PAGE 39, OF THE PUBLIC RECORDS OF PALM BEACH COUNTY, FLORIDA.
LYING IN SECTION 29, TOWNSHIP 42 SOUTH, RANGE 43 EAST
CITY OF RIVIERA BEACH, PALM BEACH COUNTY, FLORIDA

THIS INSTRUMENT WAS PREPARED BY
ROBERT BLOOMSTER JR.
PROFESSIONAL SURVEYOR AND MAPPER NO. 4134
STATE OF FLORIDA
IN THE OFFICE OF

BLOOMSTER PROFESSIONAL LAND SURVEYORS, INC.
641 NORTHEAST SPENCER STREET
JENSEN BEACH, FLORIDA 34957
OFFICE PHONE NO. (772) 334-0868 – FAX NO. (772) 334-5283
LICENSED BUSINESS NO. 6018

STATE OF FLORIDA
COUNTY OF PALM BEACH

THIS PLAT WAS FILED FOR RECORD AT _____, ___, THIS _____ DAY OF _____ 2017, AND DULY RECORDED IN PLAT BOOK _____, PAGE _____.

SHARON R. BOCK
CLERK AND COMPTROLLER

BY:_____ D.C.

SHEET 1 OF 2

DEDICATION:

STATE OF FLORIDA
COUNTY OF PALM BEACH

KNOW ALL MEN BY THESE PRESENTS THAT EQUITAS MANAGEMENT GROUP, LLC, A TENNESSEE LIMITED LIABILITY COMPANY, LICENSED TO DO BUSINESS IN THE STATE OF FLORIDA, OWNER OF THE LAND SHOWN HEREON AS AVENUE 'L' RETAIL AT AUSTRALIAN AND BLUE HERON.

LOTS 1 THROUGH 7, AND ALL OF LOT 8, LESS THE SOUTHERLY 160.19 FEET THEREOF, IN BLOCK 'O', OF REPLAT OF PLAT NO. 1, LEWIS TERMINALS, ACCORDING TO THE PLAT THEREOF, AS RECORDED IN PLAT BOOK 27, PAGE 39, OF THE PUBLIC RECORDS OF PALM BEACH COUNTY, FLORIDA. LYING IN SECTION 29, TOWNSHIP 42 SOUTH, RANGE 43 EAST, CITY OF RIVIERA BEACH, PALM BEACH COUNTY, FLORIDA

BEING MORE PARTICULARLY DESCRIBED AS FOLLOWS:

BEGIN AT THE SOUTHWEST CORNER OF SAID LOT 1, BEING THE INTERSECTION OF THE EAST RIGHT OF WAY LINE OF AUSTRALIAN AVENUE AND THE SOUTH LINE OF SAID LOT 1 OF THE REPLAT OF PLAT NO. 1, LEWIS TERMINALS; THENCE NORTH 00°17'53" WEST, ALONG SAID EAST RIGHT OF WAY LINE, A DISTANCE OF 80.14 FEET TO THE BEGINNING OF A CIRCULAR CURVE CONCAVE TO THE SOUTHEAST, HAVING A RADIUS OF 25.00 FEET, A CENTRAL ANGLE OF 80°05'51", A CHORD BEARING OF NORTH 39°45'02" EAST AND A CHORD DISTANCE OF 32.17 FEET; THENCE RUN NORTHEASTERLY ALONG THE ARC OF SAID CURVE, A DISTANCE OF 34.95 FEET TO A POINT OF REVERSE CURVATURE OF A CIRCULAR CURVE CONCAVE TO THE NORTHWEST, HAVING A RADIUS OF 1960.08 FEET, A CENTRAL ANGLE OF 14°35'38", A CHORD BEARING OF NORTH 72°30'09" EAST, AND A CHORD DISTANCE OF 497.91 FEET; THENCE RUN NORTHEASTERLY ALONG THE ARC OF SAID CURVE, A DISTANCE OF 499.26 FEET TO A POINT OF REVERSE CURVATURE OF A CIRCULAR CURVE CONCAVE TO THE SOUTHWEST, HAVING A RADIUS OF 25.00 FEET, A CENTRAL ANGLE OF 92°18'12", A CHORD BEARING OF SOUTH 68°38'35" EAST, AND A CHORD DISTANCE OF 36.06 FEET; THENCE RUN SOUTHEASTERLY ALONG THE ARC OF SAID CURVE, A DISTANCE OF 40.27 FEET TO A POINT OF TANGENCY ALONG THE WESTERLY RIGHT OF WAY LINE OF AVENUE 'L'; THENCE SOUTH 22°29'29" EAST, A DISTANCE OF 173.94 FEET TO A POINT ON THE NORTH LINE OF THE SOUTHERLY 160.19 FEET OF SAID LOT 8; THENCE SOUTH 67°30'31" WEST, ALONG SAID NORTH LINE, A DISTANCE OF 287.13 FEET TO A POINT ON THE EASTERLY LINE OF A 44 FOOT RAILROAD RIGHT OF WAY LINE; THENCE NORTH 11°05'01" WEST, ALONG SAID EAST LINE, A DISTANCE OF 93.21 FEET; THENCE SOUTH 78°53'47" WEST, A DISTANCE OF 22.00 FEET; THENCE NORTH 11°05'55" WEST, A DISTANCE OF 10.00 FEET TO A POINT ON THE SOUTH LINE OF SAID LOT 4, SAID POINT ALSO BEING ON AN ARC OF A CIRCULAR CURVE CONCAVE TO THE NORTHWEST TO WHICH A RADIAL LINE BEARS SOUTH 17°22'52" EAST, HAVING A RADIUS OF 2060.08 FEET, A CENTRAL ANGLE OF 08°14'55" WEST, A CHORD BEARING OF SOUTH 76°44'36" WEST AND A CHORD DISTANCE OF 296.33 FEET; THENCE RUN SOUTHWESTERLY ALONG THE ARC OF SAID CURVE, A DISTANCE OF 296.58 FEET TO THE POINT OF BEGINNING.

HAVE CAUSED THE SAME TO BE SURVEYED, PLATTED, AND DOES HEREBY DEDICATE THE FOLLOWING:

1. THE PALM TRAN EASEMENT AS SHOWN HEREON IS DEDICATED IN PERPETUITY, BY OWNER, TO THE BOARD OF COUNTY COMMISSIONERS OF PALM BEACH COUNTY, ITS SUCCESSORS AND ASSIGNS (HEREINAFTER "COUNTY"), FOR THE CONSTRUCTION, INSTALLATION, MAINTENANCE AND USE OF A PUBLIC TRANSIT BOARDING AND ALIGHTING AREA, WHICH USE INCLUDES BUT IS NOT LIMITED TO A PUBLIC TRANSIT BUS SHELTER, TRANSFER STATION, AND ADVERTISING. THE OWNER, ITS SUCCESSORS AND ASSIGNS (HEREAFTER "OWNER"), SHALL MAINTAIN THE EASEMENT AREA UNTIL SUCH TIME AS THE COUNTY CONSTRUCTS IMPROVEMENTS IN THE EASEMENT AREA FOR ITS INTENDED USE AND PURPOSES, AT WHICH TIME THE COUNTY WILL ASSUME MAINTENANCE OF THE EASEMENT AREA SO LONG AS THE IMPROVEMENTS ARE LOCATED THEREON AND COUNTY USES THE EASEMENT AREA FOR ITS INTENDED PURPOSES. THE MAINTENANCE OBLIGATION SHALL AUTOMATICALLY REVERT TO THE OWNER UPON COUNTY'S TEMPORARY OR PERMANENT CESSATION OF USE OF THE IMPROVEMENTS OR REMOVAL OF THE IMPROVEMENTS.

2. TRACT 'A', AS SHOWN HEREON, IS HERBY DEDICATED TO EQUITAS MANAGEMENT GROUP, A TENNESSEE LIMITED LIABILITY COMPANY, ITS SUCCESSORS AND ASSIGNS, AS A DRIVEWAY TRACT SERVING ABUTTING LOTS FOR INGRESS, EGRESS, UTILITIES, DRAINAGE, AND OTHER PURPOSES NOT INCONSISTANT WITH THIS RESERVATION, AND IS THE PERPETUAL MAINTENANCE OBLIGATION OF SAID COMPANY, ITS SUCCESSORS AND ASSIGNS, WITHOUT RECOURSE TO THE CITY OF RIVIERA BEACH AND PALM BEACH COUNTY, FLORIDA

IN WITNESS THEREOF EQUITAS MANAGEMENT GROUP, LLC, A TENNESSEE LIMITED LIABILITY COMPANY, LICENSED TO DO BUSINESS IN THE STATE OF FLORIDA HAS CAUSED THESE PRESENTS TO BE SIGNED BY ITS _____ (POSITION) AND ITS CORPORATE SEAL AFFIXED HERETO BY AND WITH THE AUTHORITY OF ITS BOARD OF DIRECTORS.

EQUITAS MANAGEMENT GROUP, LLC
A TENNESSEE LIMITED LIABILITY COMPANY

WITNESS: _____

WITNESS: _____

_____
NAME, POSITION

WITNESS: _____

WITNESS: _____

ACKNOWLEDGEMENT:

STATE OF TENNESSEE
COUNTY OF _____

BEFORE ME PERSONALLY APPEARED _____ (NAME), _____ (POSITION), WHO IS KNOWN TO ME OR HAS PRODUCED _____ AS IDENTIFICATION, AND WHO EXECUTED THE FOREGOING INSTRUMENT AS _____ (POSITION) OF EQUITAS MANGAGEMENT GROUP, LLC, A TENNESSEE LIMITED LIABILITY COMPANY, ACKNOWLEDGED TO AND BEFORE ME THAT HE EXECUTED SUCH INSTRUMENT AS SUCH OFFICER OF SAID CORPORATION, AND THAT THE SEAL AFFIXED TO THE FOREGOING INSTRUMENT IS THE CORPORATE SEAL OF SAID CORPORATION AND THAT IT WAS AFFIXED TO SAID INSTRUMENT BY DUE AND REGULAR CORPORATE AUTHORITY, AND THAT SAID INSTRUMENT IS THE FREE ACT AND DEED OF SAID COMPANY.

WITNESS MY HAND OFFICIAL SEAL THIS _____ DAY OF _____ 2017.

BY:_____
NOTARY PUBLIC

TITLE CERTIFICATION:

STATE OF FLORIDA
COUNTY OF PALM BEACH

I, _____, A DULY LICENSED TITLE OFFICER IN THE STATE OF FLORIDA, DO HEREBY CERTIFY THAT I HAVE EXAMINED THE TITLE TO THE HEREON DESCRIBED PROPERTY; THAT I FIND THE TITLE TO BE VESTED IN EQUITAS MANAGEMENT GROUP, LLC, A TENNESSEE LIMITED LIABILITY COMPANY; LICENSED TO DO BUSINESS IN THE STATE OF FLORIDA; THAT THE CURRENT TAXES HAVE BEEN PAID THROUGH ____ DAY OF _____, 2017; THAT THERE ARE NO MORTGAGES OF RECORD AND THAT THERE ARE ENCUMBRANCES OF RECORDS, BUT THOSE ENCUMBRANCES DO NOT PROHIBIT THE CREATION OF A SUBDIVISION DEPICTED BY THIS PLAT.

_____
DATED:

BY: _____

NAME: _____

STATE OF _____

LICENSE NO: _____

REVIEWING SURVEYOR'S APPROVAL

ON BEHALF OF THE CITY OF RIVIERA BEACH, FLORIDA, IN ACCORDANCE WITH CHAPTER 177.081(1), FLORIDA STATUTES, THIS PLAT BEEN REVIEWED FOR CONFORMITY TO CHAPTER 177, PART I, PLATTING, FLORIDA STATUTES, AND THE ORDINANCES OF THE CITY OF RIVIERA BEACH, FLORIDA. THIS REVIEW DOES NOT INCLUDE THE VERIFICATION OF THE GEOMETRIC DATA OR THE FIELD VERIFICATION OF THE PERMANENT REFERENCE MONUMENTS AND LOT CORNERS.

THIS _____ DAY OF _____, 2017.

_____
BY: KEVIN M. BECK, P.S.M.
PROFESSIONAL SURVEYOR AND MAPPER
FLORIDA CERTIFICATE NO. LS 6168

SURVEYOR'S NOTES:

1. NOTICE: THIS PLAT, AS RECORDED IN ITS GRAPHIC FORM, IS THE OFFICIAL DEPICTION OF THE SUBDIVIDED LANDS DESCRIBED HEREIN AND WILL IN NO CIRCUMSTANCES BE SUPPLANTED IN AUTHORITY BY ANY OTHER GRAPHIC OR DIGITAL FORM OF PLAT. THERE MAY BY ADDITIONAL RESTRICTIONS THAT ARE NOT RECORDED ON THIS PLAT THAT MAY BE FOUND IN THE PUBLIC RECORDS OF THIS COUNTY.
2. BEARINGS SHOWN HEREON ARE BASED UPON AN ASSUMED BEARING OF N.00°17'53"W. ALONG THE EAST RIGHT OF WAY LINE OF AUSTRAILIAN AVENUE AS SHOWN ON PLAT BOOK 27, PAGE 39, PALM BEACH COUNTY RECORDS.
3. DIMENSIONS SHOWN HEREON ARE IN FEET AND DECIMAL PARTS THEREOF AND ARE BASED ON THE DEFINITION OF A FOOT AS ADOPTED BY THE UNITED STATES BUREAU OF STANDARDS AND REFER TO THE HORIZONTAL PLANE.
4. BUILDING SETBACKS SHALL CONFORM TO THE CITY OF RIVIERA BEACH ZONING ORDINANCES.
5. NO BUILDING OR ANY KIND OF CONSTRUCTION OR TREES OR SHRUBS SHALL BE PLACED ON ANY EASEMENT WITHOUT THE PRIOR WRITTEN APPROVAL OF ALL EASEMENT BENEFICIARIES AND ALL APPLICABLE CITY APPROVAL OR PERMITS AS REQUIRED FOR SUCH ENCROACHMENT.
6. IN THOSE CASES WHERE EASEMENTS OF DIFFERENT TYPES CROSS OR OTHERWISE COINCIDE, DRAINAGE EASEMENTS SHALL HAVE FIRST PRIORITY, UTILITY EASEMENTS SHALL HAVE SECOND PRIORITY, ACCESS EASEMENTS SHALL HAVE THIRD PRIORITY AND ALL OTHER EASEMENTS SHALL BE SUBORDINATE TO THESE WITH THEIR PRIORITIES BEING DETERMINED BY USE RIGHTS GRANTED.

CITY OF RIVIERA BEACH UTILITY SPECIAL DISTRICT APPROVAL:

CITY OF RIVIERA BEACH
PALM BEACH COUNTY, FLORIDA

THIS PLAT IS HEREBY APPROVED BY THE CITY OF RIVIERA BEACH UTILITY SPECIAL DISTRICT.

THIS _____ DAY OF _____, 2017.

BY: _____
CHAIRPERSON

CITY OF RIVIERA BEACH APPROVALS:

CITY OF RIVIERA BEACH
PALM BEACH COUNTY, FLORIDA

IT IS HEREBY CERTIFIED THAT THIS PLAT ENTITLIED PLAT OF FAMILY DOLLAR STORE AT AUSTRALIAN AND BLUE HEREON HAS BEEN OFFICIALLY APPROVED FOR RECORD BY THE CITY OF RIVIERA BEACH, FLORIDA.

THIS _____ DAY OF _____, 2017.

BY: _____
THOMAS A. MASTERS, MAYOR

BY: _____
CLAUDINE L. ANTHONY, CMC, CITY CLERK

BY: _____
TERRENCY BAILEY, P.E.

SURVEYORS CERTIFICATE:

THIS IS TO CERTIFY THAT THE PLAT SHOWN HEREON IS A TRUE AND CORRECT REPRESENTATION OF A SURVEY MADE UNDER MY RESPONSIBLE DIRECTION AND SUPERVISION; THAT SAID SURVEY IS ACCURATE TO THE BEST OF MY KNOWLEDGE AND BELIEF; THAT PERMANENT REFERENCE MONUMENTS (P.R.M.'S) AND PERMANENT CONTROL POINTS (P.C.P.'S) HAVE BEEN PLACED AS REQUIRED BY LAW; AND FURTHER, THAT THE SURVEY DATA COMPLIES WITH ALL THE REQUIREMENTS OF CHAPTER 177, PART I, FLORIDA STATUTES, AS AMENDED, AND WITH APPLICABLE CHAPTER 5J-17.050, FLORIDA ADMINISTRATIVE CODE, AND THE ORDINANCES OF THE CITY OF RIVIERA BEACH, FLORIDA.

BY: _____ DATED: _____

ROBERT BLOOMSTER JR.
PROFESSIONAL SURVEYOR AND MAPPER
LICENSE NO. 4134
STATE OF FLORIDA

NOTARY | EQUITAS | CITY OF RIVIERA BEACH | REVIEWING ENGINEER | REVIEWING SURVEYOR | SURVEYOR

THIS INSTRUMENT WAS PREPARED BY
ROBERT BLOOMSTER JR.
PROFESSIONAL SURVEYOR AND MAPPER NO. 4134
STATE OF FLORIDA
IN THE OFFICE OF
BLOOMSTER PROFESSIONAL LAND SURVEYORS, INC.
641 NORTHEAST SPENCER STREET
JENSEN BEACH, FLORIDA 34957
OFFICE PHONE NO. (772) 334-0868 – FAX NO. (772) 334-5283
LICENSED BUSINESS NO. 6018

AVENUE 'L' RETAIL AT AUSTRALIAN AND BLUE HERON

LOTS 1 THROUGH 7, AND ALL OF LOT 8, LESS THE SOUTHERLY 160.19 FEET THEREOF, IN BLOCK 'O', OF REPLAT OF PLAT NO. 1, LEWIS TERMINALS, ACCORDING TO THE PLAT THEREOF, AS RECORDED IN PLAT BOOK 27, PAGE 39, OF THE PUBLIC RECORDS OF PALM BEACH COUNTY, FLORIDA. LYING IN SECTION 29, TOWNSHIP 42 SOUTH, RANGE 43 EAST CITY OF RIVIERA BEACH, PALM BEACH COUNTY, FLORIDA

NOTICE:
THIS PLAT, AS RECORDED IN ITS GRAPHIC FORM, IS THE OFFICIAL DEPICTION OF THE SUBDIVIDED LANDS DESCRIBED HEREIN AND WILL IN NO CIRCUMSTANCES BE SUPPLANTED IN AUTHORITY BY ANY OTHER GRAPHIC OR DIGITAL FORM OF PLAT. THERE MAY BE ADDITIONAL RESTRICTIONS THAT ARE NOT RECORDED ON THIS PLAT THAT MAY BE FOUND IN THE PUBLIC RECORDS OF THIS COUNTY.

STATE OF FLORIDA
COUNTY OF PALM BEACH

THIS PLAT WAS FILED FOR RECORD AT _____, ___., THIS _____ DAY OF _____ 2015, AND DULY RECORDED IN PLAT BOOK _____, PAGE _____.

SHARON R. BOCK
CLERK AND COMPTROLLER

BY: _____ D.C.

SHEET 2 OF 2

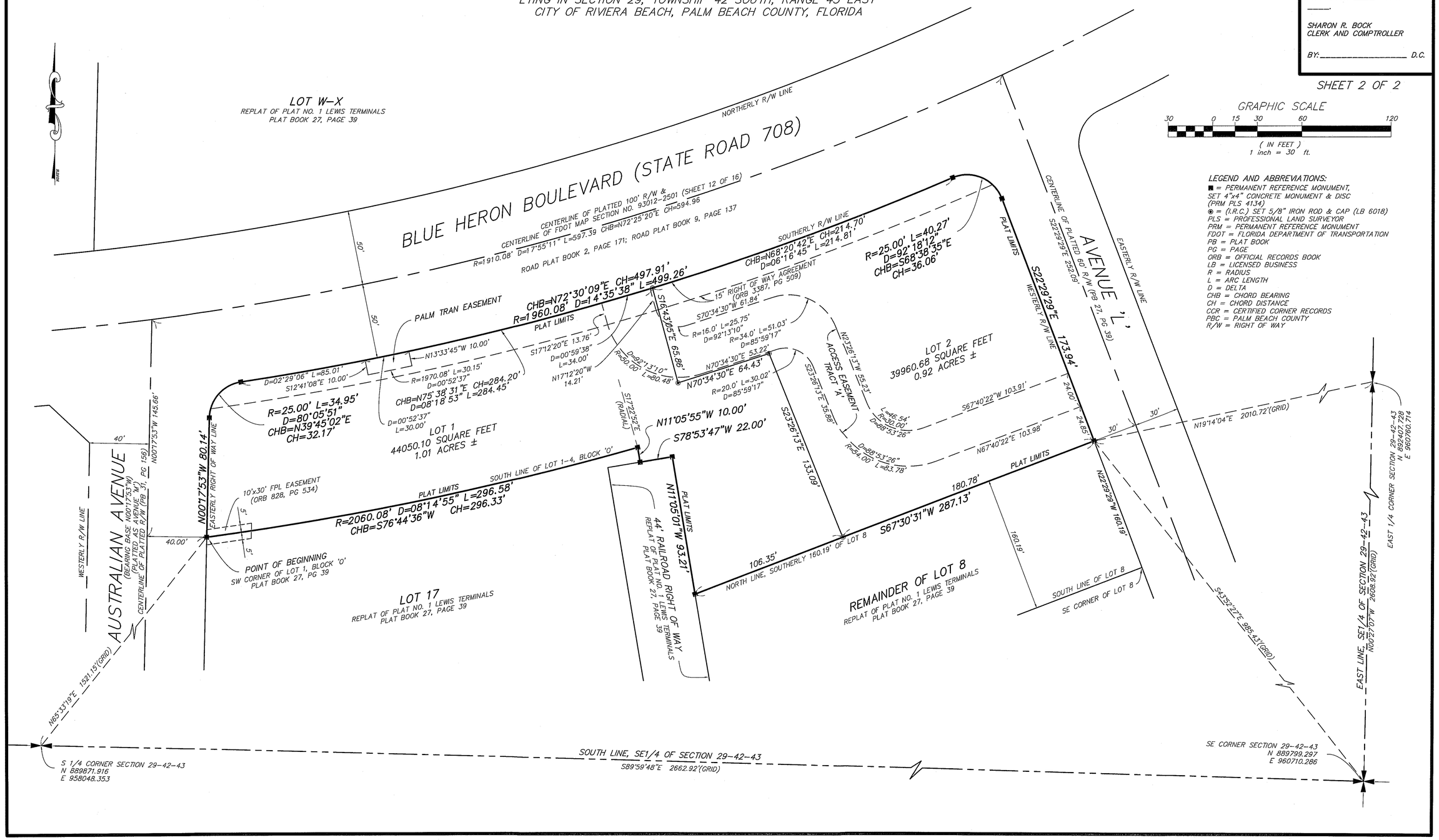

LEGEND AND ABBREVIATIONS:

■ = PERMANENT REFERENCE MONUMENT, SET 4"x4" CONCRETE MONUMENT & DISC (PRM PLS 4134)
◉ = (I.R.C.) SET 5/8" IRON ROD & CAP (LB 6018)
PLS = PROFESSIONAL LAND SURVEYOR
PRM = PERMANENT REFERENCE MONUMENT
FDOT = FLORIDA DEPARTMENT OF TRANSPORTATION
PB = PLAT BOOK
PG = PAGE
ORB = OFFICIAL RECORDS BOOK
LB = LICENSED BUSINESS
R = RADIUS
L = ARC LENGTH
D = DELTA
CHB = CHORD BEARING
CH = CHORD DISTANCE
CCR = CERTIFIED CORNER RECORDS
PBC = PALM BEACH COUNTY
R/W = RIGHT OF WAY

CITY OF RIVIERA BEACH EQUITAS MANAGEMENT GROUP, LLC. SP-16-16 LOCATION MAP

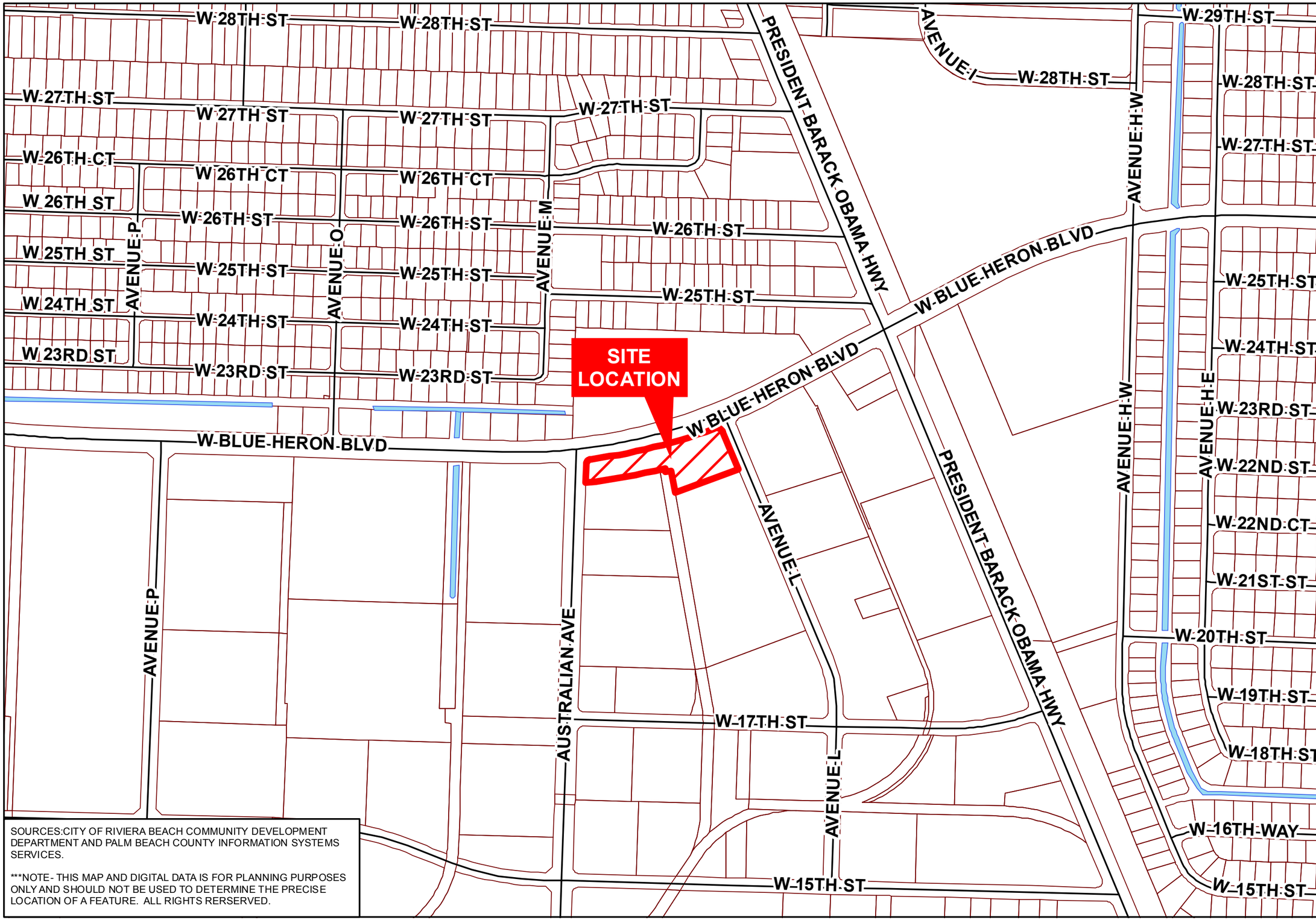

LEGEND

- STREETS
- CITY PARCELS
- WATER
- PROPERTY BOUNDARY ±1.93 ACRES
- MUNICIPALITIES

N

0 200 400
FEET

1 INCH = 400 FEET

CITY OF RIVIERA BEACH
DEPARTMENT OF
COMMUNITY DEVELOPMENT
600 W. BLUE HERON BLVD.
RIVIERA BEACH, FL 33404
(561) 845-4060
WWW.RIVIERABCH.COM

SOURCES:CITY OF RIVIERA BEACH COMMUNITY DEVELOPMENT DEPARTMENT AND PALM BEACH COUNTY INFORMATION SYSTEMS SERVICES.

***NOTE- THIS MAP AND DIGITAL DATA IS FOR PLANNING PURPOSES ONLY AND SHOULD NOT BE USED TO DETERMINE THE PRECISE LOCATION OF A FEATURE. ALL RIGHTS RERSERVED.

CITY OF RIVIERA BEACH EQUITAS MANAGEMENT GROUP, LLC. SP-16-16 AERIAL MAP

LEGEND

- STREETS
- CITY PARCELS
- PROPERTY BOUNDARY ±1.93 ACRES
- MUNICIPALITIES

N

0 50 100
FEET

1 INCH = 100 FEET

CITY OF RIVIERA BEACH
DEPARTMENT OF
COMMUNITY DEVELOPMENT
600 W. BLUE HERON BLVD.
RIVIERA BEACH, FL 33404
(561) 845-4060
WWW.RIVIERABCH.COM

SOURCES:CITY OF RIVIERA BEACH COMMUNITY DEVELOPMENT DEPARTMENT AND PALM BEACH COUNTY INFORMATION SYSTEMS SERVICES. AERIALS ARE 2015 TRUE COLOR.

***NOTE- THIS MAP AND DIGITAL DATA IS FOR PLANNING PURPOSES ONLY AND SHOULD NOT BE USED TO DETERMINE THE PRECISE LOCATION OF A FEATURE. ALL RIGHTS RERSERVED.

STAFF REPORT – CITY OF RIVIERA BEACH
EQUITAS MANAGEMENT GROUP, LLC.
THOMAS ENGINEERING GROUP, LLC. PA-16-07
PLANNING AND ZONING BOARD – MARCH 23, 2017

AN APPLICATION FROM EQUITAS MANAGEMENT GROUP, LLC. AND THOMAS ENGINEERING GROUP, LLC. (PA-16-05) REQUESTING APPROVAL OF A PLAT FOR A PROPERTY LOCATED PARCEL CONTROL NUMBER 56-43-42-28-31-015-0010, TOTALING 1.93 ACRES OF LAND, TO FACILITATE THE DEVELOPMENT OF A SINGLE STORY 8,247 SQUARE FOOT RETAIL BUILDING ON 0.92 ACRE OF 1.93 ACRES OF VACANT COMMERCIAL LAND.

A. Applicant: Equitas Management Group, LLC. (authorized agent)
Thomas Engineering Group, LLC. (authorized agent)

B. Request: The applicant is requesting a plat approval to facilitate the development of a single story 8,247 square foot retail building on 0.92 acre of the 1.93 acres of vacant commercial land on Parcel Control Number 56-43-42-28-31-015-0010.

C. Location: The proposed development is located at Parcel Control Number 56-43-42-28-31-015-0010 south of W. Blue Heron Boulevard, west of Avenue L, and east of Australian Avenue (see attached location map).

D. Property Description and Uses: The subject property description and uses are as follow:

Parcel Control Number:	56-43-42-28-31-015-0010;
Parcel Size:	±1.93 acres (84,010.78 square feet); proposed development will be ±0.92 acre (39,978 square feet)
Existing Use:	Vacant commercial land;
Zoning:	General Commercial (CG); and
Future Land Use:	Commercial (COM).

E. Adjacent Property Description and Uses:

North: Vacant commercial uses; Commercial (COM) Future Land Use and General Commercial (CG) Zoning.

South: Community facility uses (Riviera Beach Public Works facility); Community Facilities Future Land Use and Community Facility (CF) Zoning.

East: Industrial uses; Commercial (COM) Future Land Use and General Commercial (CG) Zoning.

West: Industrial uses; Industrial (IND) Future Land Use and Limited Industrial (IL) Zoning.

F. Background:

Shimonovitc Shraga F Trust owns the property referenced as Parcel Control Number 56-43-42-28-31-015-0010, which is a vacant commercial 1.93 acres parcel. Shimonovitc Shraga F Trust has authorized Equitas Management Group, LLC. and Thomas Engineering Group, LLC. to serve as the authorized agent for the parcel at Parcel Control Number 56-43-42-28-31-015-0010. Through a replat of the property (PA-16-05), 0.92 acre of the property will be used to support the proposed 8,247 square feet retail building. The remaining 1.10 acres of the property will be used for future development that's consistent with and compatible to the uses permitted within the General Commercial (CG) Zoning District and Commercial (COM) Future Land Use District).

On September 29, 2016, Equitas Management Group, LLC. and Thomas Engineering Group, LLC. submitted the official Plat application (PA-16-05) to Staff. City Departmental Staff reviewed the Plat application and provided corresponding comments to the applicant. All comments were addressed by the applicant and City Staff has no objections to the Plat application.

An overview of Staff's analysis is featured below.

G. Staff Analysis:

Proposed Development/Use: The applicant is proposing to build a single story 8,247 square foot retail building on 0.92 acre of the 1.93 acres of vacant commercial land at Parcel Control Number 56-43-42-28-31-015-0010.

Zoning Regulations: This applicant's proposed use as a single story 8,247 square foot retail building is consistent with the uses permitted in the General Commercial (CG) Zoning District as defined in the City's Land Development Regulations.

Comprehensive Plan: The applicant's proposed use is consistent with the permitted Commercial (COM) Future Land Use designation established in the City's Comprehensive Plan.

Compatibility: The applicant's proposed project is compatible with the surrounding parcels.

Levels of Service: City services such as roads, water, sewer, and garbage collection are currently available to the site.

Landscaping: The applicant's proposed landscape plan is compatible with the City's Land Development Regulations.

Parking/Traffic: Adequate parking has been proposed by the applicant in accordance with the City's Land Development Regulations.

H. Recommendation: Staff recommends the Planning and Zoning Board to consider all information presented and provide a recommendation to the City Council.

The Palm Beach Post

Palm Beach Daily News | ideabar

RECEIPT

Account:	G790	Phone:	561-845-4000
Name:	CITY OF RIVIERA BEACH	E-mail:	ap@rivierabch.com
Address:	10682 PO DRAWER RIVIERA BEACH FL 33419-0682		

Order Name:	Notice
Order Id:	730960
Original Order Id:	
Copy Line:	PUBLIC HEARING NOTICECITY OF RIVIERA BEA
Sales Rep:	PB116 R Hindmarch (P)
Purchase Order:	
Pay Type:	Billed
Account Group:	
Caller:	DeAndrae Spradley
Section:	6205 Legal Notices
Reply Request:	
Tear Sheets:	0

Order Summary

Base:	$261.44
Other Charges:	$0.00
Discounts:	$0.00
Agency Commission:	$0.00
Sales Tax:	$0.00
Total Order	$261.44

Payment Summary

No payment information available.

The Palm Beach Post

Palm Beach Daily News | ideabar

RECEIPT

Ad Name: 1439742A

Ad Id: 1439742

Original Ad Id:

Start:	04/19/2017
Stop:	04/19/2017
Issues:	1
Words:	351
Dimensions:	1 X 76
Color:	

Editions
PB Post
PB Post Web

The Palm Beach Post

Palm Beach Daily News | ideabar

RECEIPT

PUBLIC HEARING NOTICE
CITY OF RIVIERA BEACH, FLORIDA

The City Council will conduct a public hearing on Wednesday, May 3, 2017 at 6:00 p.m. or soon thereafter,and from time to time thereafter as necessary, in the Council Chambers at the Municipal Complex, 600 West Blue Heron Blvd., Riviera Beach, FL, to review the following resolutions and ordinances:

1. A RESOLUTION OF THE CITY COUNCIL OF THE CITY OF RIVIERA BEACH, PALM BEACH COUNTY, FLORIDA, APPROVING THE PLAT ENTITLED "AVENUE L RETAIL AT AUSTRALIAN AND BLUE HERON", TOTALING APPROXIMATELY 1.93 ACRES, LOCATED AT PARCEL CONTROL NUMBER 56-43-42-28-31-015-0010; AUTHORIZING THE MAYOR, CITY CLERK, AND CITY ENGINEER TO SIGN THE PLAT ENTITLED "FAMILY DOLLAR STORE AT AUSTRALIAN AND BLUE HERON"; AND PROVIDING AN EFFECTIVE DATE.

2. A RESOLUTION OF THE CITY COUNCIL OF THE CITY OF RIVIERA BEACH, PALM BEACH COUNTY, FLORIDA, APPROVING AN APPLICATION FROM THE EQUITAS MANAGEMENT GROUP, LLC. AND THOMAS ENGINEERING GROUP, LLC. FOR SITE PLAN APPROVAL TO DEVELOP A SINGLE STORY 8,247 SQUARE FOOT RETAIL BUILDING ON 0.92 ACRE OF 1.93 ACRES OF VACANT COMMERCIAL LAND LOCATED AT PARCEL CONTROL NUMBER 56-43-42-28-31-015-0010; AND PROVIDING FOR AN EFFECTIVE DATE.

Background material is available for review in its entirety in the Community Development Department between the hours of 8:30 AM and 5:00 PM, Monday through Friday, except holidays.

PLEASE TAKE NOTICE AND BE ADVISED, that if any interested person desires to appeal any decision made by the Board or Council with respect to any matter considered at the meetings, such interested person, at own expense, will need a record of the proceedings, and for such purpose may need to ensure that a verbatim record of the proceedings is made, which record includes the testimony and evidence upon which the appeal is to be based.

In accordance with the Americans with Disabilities Act of 1990, persons needing special accommodations to participate in the proceedings should contact the Legislative Aide at 561-845-4095 no later than 96 hours prior to the proceedings. If hearing impaired, telephone the Florida Relay Services 1-800-955-8771 (TDD) or 1-800-955-8770 (Voice) for assistance.

PUB: The Palm Beach Post
3-19/ 2017 #730960

The Palm Beach Post

Palm Beach Daily News | ideabar

RECEIPT

Ad shown is not actual print size.

CITY OF RIVIERA BEACH CITY COUNCIL
AGENDA ITEM SUMMARY

Meeting Date: 5/3/2017

Agenda Category: REGULAR RESOLUTION

Subject: A RESOLUTION OF THE CITY COUNCIL OF THE CITY OF RIVIERA BEACH, PALM BEACH COUNTY, FLORIDA, AUTHORIZING THE CITY MANAGER TO TRANSMIT NOTICE TO THE FLORIDA DEPARTMENT OF ECONOMIC OPPORTUNITY THAT THE CITY INTENDS ON PREPARING AN EVALUATION AND APPRAISAL REPORT OF THE CITY'S COMPREHENSIVE PLAN; AUTHORIZING THE FINANCE DIRECTOR TO TRANSFER $25,000 FROM ACCOUNT NUMBER 001-0714-515-0-1201 IN ORDER TO CREATE A FUND ACCOUNT NUMBER 001-0714-515-0-3107 ENTITLED COMPREHENSIVE PLAN UPDATE FOR PROFESSIONAL MODERATOR SERVICES FOR THE PUBLIC WORKSHOPS ASSOCIATED WITH THE PROPOSED COMPREHENSIVE PLAN AMENDMENTS; AND PROVIDING FOR AN EFFECTIVE DATE.

Recommendation/Motion: Staff is recommending the City Council to consider approving this Resolution

---

Originating Dept	Community Development	**Costs**	N/A
User Dept.	Community Development	**Funding Source**	The City desires to transfer $25,000 from account number 001-0714-515-0-1201 to create account number 001-0714-515-0-3107, entitled Comprehensive Plan Update, to serve as the primary account associated with amendments to the City of Riviera Beach's Comprehensive Plan and to hire a moderator for the public workshops associated with amendments to the City of Riviera Beach's Comprehensive Plan.
Advertised	No	**Budget Account Number**	001-0714-515-0-1201
Date			
Paper			
Affected Parties	Not Required		

Background/Summary:

The City's Comprehensive Plan and Code of Ordinances controls and directs development and uses throughout the City. Pursuant to Section 163.3191(1), Florida Statutes, at least once every 7 years, each local government in the State shall evaluate its comprehensive plan to determine if plan amendments are necessary to reflect changes in state requirements in this part since the last update of the comprehensive plan, and notify the state land planning agency as to its determination. By Ordinance Number 3073, the City of Riviera Beach's Comprehensive Plan was last amended on October 6, 2010. As such, the City is reviewing its Comprehensive Plan to ensure that the City meets the regulations set forth in the State statutes and to establish new goals, objectives, and policies for the City's residents, visitors, and business owners.

Pursuant to Rule Chapter: 73C-49.002, Florida Administrative Code, local governing bodies shall submit their evaluation and appraisal notification letter to the Department of Economic Opportunity, Bureau of Community Planning in accordance with the schedule set forth in Rule Chapter 73C-49.002. In order to amend the City's Comprehensive Plan, the City must submit its evaluation and appraisal notification letter to the Department of Economic Opportunity, Bureau of Community Planning by July 1, 2017.

The intent of this Resolution is to grant the City Manager permission to transmit the evaluation and appraisal intent letter to the Florida Department of Economic Opportunity, Bureau of Community Planning. Additionally, the intent of this Resolution is to authorize the Finance Director to transfer $25,000 from account number 001-0714-515-0-1201 to create an account number 001-0714-515-0-3107, entitled Comprehensive Plan Update. This new Comprehensive Plan Update account will serve as the primary account associated with the activities needed to amend the City of Riviera Beach's Comprehensive Plan.

Fiscal Years	2016-2017
Capital Expenditures	
Operating Costs	$25,000
External Revenues	
Program Income (city)	
In-kind Match (city)	
Net Fiscal Impact	$25,000
NO. Additional FTE Positions (cumulative)	

III. Review Comments

A. Finance Department Comments:

B. Purchasing/Intergovernmental Relations/Grants Comments:

C. Department Director Review:

Contract Start Date

Contract End Date

Renewal Start Date

Renewal End Date

Number of 12 month terms this renewal

Dollar Amount

Contractor Company Name

Contractor Contact

Contractor Address

Contractor Phone Number

Contractor Email

Type of Contract

Describe

ATTACHMENTS:

File Name	Description	Upload Date	Type
Exhibit_A_City_Manager_Letter_to_DEO.docx	Exhibit A - Letter to Florida Department of Economic Opportunity	4/7/2017	Exhibit
Resolution_DEO_comp_Plan_amendment.docx	RESOLUTION -DEPT OF ECONOMIC OPPORTUNITY	4/7/2017	Cover Memo

REVIEWERS:

Department	Reviewer	Action	Date
Community Development	Spradley, DeAndre	Approved	4/7/2017 - 4:31 PM
Purchasing	Daley, Pamela	Rejected	4/7/2017 - 4:39 PM
Community Development	Spradley, DeAndre	Approved	4/7/2017 - 4:42 PM
Purchasing	Mealy, Dean	Approved	4/7/2017 - 4:46 PM
Finance	Hoskins, Karen	Approved	4/7/2017 - 5:05 PM
Attorney	Degraffenreidt, Andrew	Approved	4/10/2017 - 11:50 AM
City Clerk	Robinson, Claudene	Approved	4/10/2017 - 12:01 PM
City Manager	Jones, Danny	Approved	4/12/2017 - 7:23 PM

CITY OF RIVIERA BEACH

CITY MANAGER'S OFFICE
600 WEST BLUE HERON BLVD. **RIVIERA BEACH, FLORIDA 33404**
(561) 845-4060 **FAX (561) 840-4038**

April 19, 2017

Ray Eubanks, Plan Processing Administrator
Bureau of Community Planning
Florida Department of Economic Opportunity
Caldwell Building
107 East Madison Street, MSC 160
Tallahassee, FL 32399-6545

Re: City of Riviera Beach Evaluation and Appraisal Notice of Intent

Dear Mr. Eubanks,

Pursuant to Section 163.3191(1), Florida Statutes, at least once every 7 years, each local government in the State of Florida shall evaluate its comprehensive plan to determine if plan amendments are necessary to reflect changes in state requirements in this part since the last update of the comprehensive plan, and notify the state land planning agency as to its determination. Per Rule Chapter 73C-49.002, Florida Administrative Code, the intent of this letter is to inform the Florida Department of Economic Opportunity, Bureau of Community Planning that the City of Riviera Beach intends to evaluate and amend its Comprehensive Plan to reflect changes in state requirements as well as a new planning period (2040). By Ordinance Number 3073, the City of Riviera Beach's Comprehensive Plan was last amended on October 6, 2010. Upon completion of the evaluation and appraisal report of the City's Comprehensive Plan, the City will submit the proposed amendments to the Department of Economic Opportunity for review in compliance with Chapter 163, Florida Statutes and Rule 9J-5, Florida Administrative Code.

Should you have any questions regarding the City's Evaluation and Appraisal of the Comprehensive Plan, feel free to contact Terrence bailey, Director of Community Development at (561) 845-4060 or by email at tbailey@rivierabch.com.

Thanks for your time and we look forward to working with the Florida Department of Economic Opportunity on this and future endeavors.

Best regards,

Jonathan E. Evans, MPA, MBA, ICMA-CM
City Manager

RESOLUTION NO. _____

A RESOLUTION OF THE CITY COUNCIL OF THE CITY OF RIVIERA BEACH, PALM BEACH COUNTY, FLORIDA, AUTHORIZING THE CITY MANAGER TO TRANSMIT NOTICE TO THE FLORIDA DEPARTMENT OF ECONOMIC OPPORTUNITY THAT THE CITY INTENDS ON PREPARING AN EVALUATION AND APPRAISAL REPORT OF THE CITY'S COMPREHENSIVE PLAN; AUTHORIZING THE FINANCE DIRECTOR TO TRANSFER $25,000 FROM ACCOUNT NUMBER 001-0714-515-0-1201 IN ORDER TO CREATE ACCOUNT NUMBER 001-0714-515-0-3107 ENTITLED COMPREHENSIVE PLAN UPDATE; AND PROVIDING FOR AN EFFECTIVE DATE.

WHEREAS, the City of Riviera Beach's Comprehensive Plan and Code of Ordinances controls and directs development and uses throughout the City; and

WHEREAS, pursuant to Section 163.3191(1), Florida Statutes, at least once every 7 years, each local government in the State of Florida shall evaluate its comprehensive plan to determine if plan amendments are necessary to reflect changes in state requirements in this part since the last update of the comprehensive plan, and notify the state land planning agency as to its determination; and

WHEREAS, by Ordinance Number 3073, the City of Riviera Beach's Comprehensive Plan was last amended on October 6, 2010; and

WHEREAS, pursuant to Rule Chapter: 73C-49.002, Florida Administrative Code, local governing bodies shall submit their evaluation and appraisal notification letter to the Department of Economic Opportunity, Bureau of Community Planning in accordance with the schedule set forth in Rule Chapter 73C-49.002, Florida Administrative Code; and

WHEREAS, pursuant to Rule Chapter: 73C-49.002, Florida Administrative Code, the City must submit its evaluation and appraisal notification letter to the Department of Economic Opportunity, Bureau of Community Planning by July 1, 2017; and

WHEREAS, pursuant to Rule Chapter: 73C-49.002, Florida Administrative Code, a draft of the City's evaluation and appraisal notification letter to the Department of Economic Opportunity, Bureau of Community Planning is attached and made part of this Resolution as "Exhibit A"; and

WHEREAS, the City Council desires to amend the City of Riviera Beach's Comprehensive Plan to establish new goals, objectives, and policies for the City's residents, visitors, and business owners; and

WHEREAS, the City desires to transfer $25,000 from account number 001-0714-515-0-1201 to create account number 001-0714-515-0-3107, entitled Comprehensive Plan Update, to serve as the primary account associated with activities required to amend the City of Riviera Beach's Comprehensive Plan; and

WHEREAS, the City of Riviera Beach's Comprehensive Plan and Land Development Regulations, which is part of the City's Code of Ordinances, needs updating to incorporate, regulate and control the location of development within the City to reflect the community's new goals, objectives, and policies; and

WHEREAS, the City Council has determined that preparing amendments to the City of Riviera Beach's comprehensive Plan and the enactment of this Resolution is for proper municipal purposes and protects the health, safety, and welfare of the public.

NOW, THEREFORE, BE IT RESOLVED BY THE CITY COUNCIL OF THE CITY OF RIVIERA BEACH, PALM BEACH COUNTY, FLORIDA, AS FOLLOWS:

SECTION 1. The City Council hereby authorizes the City Manager to transmit the City's Evaluation and Appraisal Notification Letter to the Department of Economic Opportunity, Bureau of Community Planning, which shall be attached hereto and made part of this Resolution as Exhibit "A".

SECTION 2. The City Council hereby authorizes the Finance Director to transfer $25,000 from account number 001-0714-515-0-1201 to create account number 001-0714-515-0-3107, entitled Comprehensive Plan Update, to serve as the primary account associated with activities required to amend the City of Riviera Beach's Comprehensive Plan.

SECTION 3. Should any one or more of the provisions or element of this Resolution be held invalid, such provision or element shall be null and void, and shall be deemed separate from the remaining provisions or elements and shall in no way affect the validity of any of the remaining provisions or elements of this resolution.

SECTION 4. This Resolution shall take effect immediately upon approval.

PASSED and APPROVED this _____day of _____, 2017.

[REMAINDER OF PAGE INTENTIONALLY BLANK]

APPROVED:

_____
THOMAS A. MASTERS
MAYOR

_____
TERENCE D. DAVIS
CHAIRPERSON

ATTEST:

_____
CLAUDENE L. ANTHONY
CERTIFIED MUNICIPAL CLERK
CITY CLERK

_____
KASHAMBA MILLER-ANDERSON
CHAIR PRO TEM

_____
LYNNE L. HUBBARD
COUNCILPERSON

_____
TONYA DAVIS JOHNSON
COUNCILPERSON

_____
DAWN S. PARDO
COUNCILPERSON

MOTIONED BY: _____

SECONDED BY: _____

L. HUBBARD _____

K. MILLER-ANDERSON _____

T. DAVIS JOHNSON _____

D. PARDO _____

T. DAVIS _____

REVIEWED AS TO LEGAL SUFFICIENCY

ANDREW DEGRAFFENREIDT
CITY ATTORNEY

DATE: _____

CITY OF RIVIERA BEACH CITY COUNCIL
AGENDA ITEM SUMMARY

Meeting Date: 5/3/2017

Agenda Category: ORDINANCE ON FIRST READING

Subject: The City seeks to adopt an ordinance as a local law to protect minors subject to conversion therapy efforts as minors are not effectively protected by other means, including but not limited to, other state statutes, local ordinances or federal legislation.

Recommendation/Motion:

Originating Dept	Executive	**Costs**	
User Dept.	Executive	**Funding Source**	
Advertised	No	**Budget Account Number**	
Date			
Paper			
Affected Parties	Not Required		

Background/Summary:

This item was originally approved on first reading at the March 1, 2017 Regular City Council Meeting. No comments were received concerning this item and no changes were made since first reading.

Major professional associations of mental health practitioners and researchers in the United States and elsewhere for nearly 40 years have agreed that being lesbian, gay, bisexual, transgender or gender non-conforming, or questing (LGBTQ) is not a mental disease, disorder or illness, deficiency or shortcoming.

The American Psychological Association's Task Force on Appropriate Therapeutic Responses to Sexual Orientation ("APA Task Force") conducted a systematic review of peer-reviewed journal literature on sexual orientation change efforts (SOCE) also referred to as (“Conversion" or “Reparative” therapy), and issued its report in 2009, citing research that sexual orientation change efforts can pose critical health risks to lesbian, gay, and bisexual people, including confusion, depression, guilt, helplessness, hopelessness, shame, social withdrawal, suicidality, substance abuse, stress, disappointment, self-blame, decreased self-esteem and authenticity to others, increased self-hatred, hostility and blame toward parents, feelings of anger and betrayal, loss of friends and potential romantic partners, problems in sexual and emotional intimacy, sexual dysfunction, high risk sexual behavior, a feeling of being dehumanized and untrue to self, a loss of faith, and a sense of having wasted time and resources. In this context, as detailed more fully in the attached ordinance, conversion therapies have been deemed harmful, without medical basis, and overwhelmingly “contraindicated” as tools to "help" LGBTQ individuals, and only serve to further ostracize, harm and pose risk to such individuals.

The proposed ban on the practice of conversion therapy efforts within the City of Riviera Beach would only apply to minors (i.e., persons under 18 years of age) and, significantly, is not intended to prevent

mental health providers from expressing their views to patients, whether children or adults, about SOCE, homosexuality, or any other topic; prevent mental health providers from recommending SOCE to patients, whether children or adults; prevent mental health providers from administering SOCE to any person who is 18 years of age or older; prevent mental health providers from referring minors to unlicensed counselors, such as religious leaders; prevent unlicensed providers, such as religious leaders, from administering SOCE to children or adults; or prevent minors from seeking SOCE from mental health providers in other municipalities, counties or states which do not prohibit such already.

Fiscal Years

Capital Expenditures

Operating Costs

External Revenues

Program Income (city)

In-kind Match (city)

Net Fiscal Impact

NO. Additional FTE Positions (cumulative)

III. Review Comments

A. Finance Department Comments:

B. Purchasing/Intergovernmental Relations/Grants Comments:

C. Department Director Review:

Contract Start Date

Contract End Date

Renewal Start Date

Renewal End Date

Number of 12 month terms this renewal

Dollar Amount

Contractor Company Name

Contractor Contact

Contractor Address

Contractor Phone Number

Contractor Email

Type of Contract

Describe

ATTACHMENTS:

File Name	Description	Upload Date	Type
ORDINANCE_On_Conversion_Therapy_CC_March_2017.docx	ORDINANCE On Conversion Therapy_CC March 2017	2/23/2017	Cover Memo

REVIEWERS:

Department	Reviewer	Action	Date
City Manager	Jones, Danny	Approved	4/12/2017 - 4:50 PM

ORDINANCE NO. _____

AN ORDINANCE OF THE CITY OF THE CITY COUNCIL OF THE CITY OF RIVIERA BEACH, PALM BEACH COUNTY, FLORIDA, PROHIBITING THE PRACTICE OF CONVERSION THERAPY ON PATIENTS WHO ARE MINORS; PROVIDING FOR CODIFICATION PURSUANT TO §1-8 OF THE CITY'S CODE OF ORDINANCES; PROVIDING FOR CONFLICT, SEVERABILITY, AND FOR OTHER PURPOSES; AND PROVIDING AN EFFECTIVE DATE;.

WHEREAS, as recognized by major professional associations of mental health practitioners and researchers in the United States and elsewhere for nearly 40 years, being lesbian, gay, bisexual, transgender or gender nonconforming, or questioning (LGBT or LGBTQ) is not a mental disease, disorder or illness, deficiency or shortcoming; and

WHEREAS, the American Academy of Pediatrics in 1993 published an article in its Journal, stating: "Therapy directed at specifically changing sexual orientation is contraindicated, since it can provoke guilt and anxiety while having little or no potential for achieving changes in orientation"[1]; and

WHEREAS, the American Psychiatric Association in December 1998 published its opposition to any psychiatric treatment, including reparative or conversion therapy, which therapy regime is based upon the assumption that homosexuality is a mental disorder per se or that a patient should change his or her homosexual orientation[2]; and

WHEREAS, the American Psychological Association's Task Force on Appropriate Therapeutic Responses to Sexual Orientation ("APA Task Force") conducted a systematic review of peer-reviewed journal literature on sexual orientation change efforts ("SOCE"), and issued its report in 2009, citing research that sexual orientation change efforts can pose critical health risks to lesbian, gay, and bisexual people, including confusion, depression, guilt, helplessness, hopelessness, shame, social withdrawal, suicidality, substance abuse, stress, disappointment, self-blame, decreased self-esteem and authenticity to others, increased self-hatred, hostility and blame toward parents, feelings of anger and betrayal, loss of friends and potential romantic partners, problems in sexual and emotional intimacy, sexual dysfunction, high-risk sexual behaviors, a feeling of being dehumanized and untrue to self, a loss of faith , and a sense of having wasted time and resources[3]; and

WHEREAS, following the report issued by the APA Task Force, the America Psychological Association in 2009 issued a resolution on Appropriate Affirmative

---

[1] http://pediatrics.aappublications.org/content/pediatrics/92/4/631.full.pdf
[2] https://www.camft.org/ias/images/PDFs/SOCE/APA_Position_Statement.pdf
[3] https://www.apa.org/pi/lgbt/resources/therapeutic-response.pdf

Responses to Sexual Orientation Distress and Change Efforts (SOCE), advising parents, guardians, young people, and their families to avoid sexual orientation change efforts that portray homosexuality as a mental illness or developmental disorder and to seek psychotherapy, social support, and educational services that provide accurate information on sexual orientation and sexuality, increase family and school support, and reduce rejection of sexual minority youth[4]; and

WHEREAS, the American Psychoanalytic Association in June 2012 issued a position statement on conversion therapy efforts, articulating that "As with any societal prejudice, bias against individuals based on actual or perceived sexual orientation, gender identity or gender expression negatively affects mental health, contributing to an enduring sense of stigma and pervasive self-criticism through the internalization of such prejudice" and that psychoanalytic technique "does not encompass purposeful attempts to 'convert, ' repair,' change or shift an individual's sexual orientation, gender identity or gender expression," such efforts being inapposite to "fundamental principles of psychoanalytic treatment and often result in substantial psychological pain by reinforcing damaging internalized attitudes"[5]; and

WHEREAS, the American Academy of Child & Adolescent Psychiatry in 2012 published an article in its Journal stating that clinicians should be aware that there is "no evidence that sexual orientation can be altered through therapy and that attempts to do so may be harmful;" that there is "no medically valid basis for attempting to prevent homosexuality, which is not an illness;" and that such efforts may encourage family rejection and undermine self-esteem, connectedness and caring, important protective factors against suicidal ideation and attempts; and that, for similar reasons cumulatively stated above, carrying the risk of significant harm, SOCE is contraindicated[6]; and

WHEREAS, the Pan American Health Organization, a regional office of the World Health Organization, issued a statement in 2012 stating: "'These supposed conversion therapies constitute a violation of the ethical principles of health care and violate human rights that are protected by international and regional agreements.'" The organization also noted that conversion therapies "lack medical justification and represent a serious threat to the health and well-being of affected people"[7]; and

WHEREAS, in 2014 the American School Counselor Association issued a position statement that states: "It is not the role of the professional school counselor to attempt to change a student's sexual orientation or gender identity. Professional school counselors do not support efforts by licensed mental health professionals to change a

---

[4] http://www.apa.org/about/policy/sexual-orientation.pdf
[5] http://www.apsa.org/content/2012-position-statement-attempts-change-sexual-orientation-gender-identity-or-gender
[6] http://www.jaacap.com/article/S0890-8567(12)00500-X/pdf
[7] http://www.paho.org/hq/index.php?option=com_content&view=article&id=6803%3A2012-therapies-change-sexual-orientation-lack-medical-justification-threaten-health&catid=740%3Apress-releases&Itemid=1926&lang-en

student's sexual orientation or gender as these practices have been proven ineffective and harmful"[8]; and

WHEREAS, a 2015 report of the Substance Abuse and Mental Health Services Administration, a division of the U.S. Department of Health and Human Services, "Ending Conversion Therapy: Supporting and Affirming LGBTQ Youth" further reiterates based on scientific literature that conversion therapy efforts to change an individual's sexual orientation, gender identity, or gender expression is a practice not supported by credible evidence and has been disavowed by behavioral health experts and associations, perpetuates outdated views of gender roles and identities, negative stereotypes, stating, importantly, that such therapy may put young people at risk of serious harm, and recognizing that, same-gender sexual orientation (including identity, behavior, and attraction) is part of the normal spectrum of human diversity and does not constitute a mental disorder[9]; and

WHEREAS, the American College of Physicians wrote a position paper in 2015 opposing the use of "conversion," " reorientation," or "reparative" therapy for the treatment of LGBT persons, stating that "[a]vailable research does not support the use of reparative therapy as an effective method in the treatment of LGBT persons. Evidence shows that the practice may actually cause emotional or physical harm to LGBT individuals, particularly adolescents or young persons"[10]; and

WHEREAS, at least one federal appeals court[11] found that a prohibition of SOCE does not violate first amendment rights and noted that the subject ordinance only required mental health providers who wish to engage in practices that seek to change a minor's sexual orientation either to wait until the minor turns 18 or be subject to professional discipline, leaving mental health providers free to discuss or recommend treatment and to express their views on any topic; and

WHEREAS, the City does not intend to prevent mental health providers from speaking to the public about SOCE; expressing their views to patients; recommending SOCE to patients; administering SOCE to any person who is 18 years of age or older; or referring minors to unlicensed counselors, such as religious leaders. This ordinance does not prevent unlicensed providers, such as religious leaders, from administering SOCE to children or adults; nor does it prevent minors from seeking SOCE from mental health providers in other political subdivisions or states outside of the City of Riviera Beach, Florida; and

WHEREAS, City of Riviera Beach has a compelling interest in protecting the physical and psychological well-being of minors, including but not limited to lesbian, gay, bisexual, transgender and questioning youth, and in protecting its minors against

---

[8] https://www.schoolcounselor.org/asca/media/asca/PositionStatements/PS_LGBTQ.pdf
[9] http://store.samhsa.gov/shin/content/SMA15-4928/SMA15-4928.pdf
[10] http://annals.org/article.aspx?articleid=2292051
[11] Pickup v. Brown, 740 F3d 1208 (9th Cir. 2014)

exposure to serious harms caused by sexual orientation and gender identity change efforts; and

WHEREAS, the City Council hereby finds the overwhelming research demonstrating that sexual orientation and gender identity change efforts can pose critical health risks to lesbian, gay, bisexual, transgender or questioning persons, and that being lesbian, gay, bisexual, transgender or questioning is not a mental disease, mental disorder, mental illness, deficiency, or shortcoming; and

WHEREAS, the City Council finds minors receiving treatment from licensed therapists in the City of Riviera Beach, FL who may be subject to conversion or reparative therapy are not effectively protected by other means, including, but not limited to, other state statutes, local ordinances, or federal legislation; and

WHEREAS, the City Council desires to prohibit, within the geographic boundaries of the City, the practice of sexual orientation or gender identity change efforts on minors by licensed therapists only, including reparative and/or conversion therapy, which have been demonstrated to be harmful to the physical and psychological well-being of lesbian, gay, bisexual, transgender and questioning persons.

NOW, THEREFORE, BE IT ORDAINED BY THE CITY COUNCIL OF THE CITY OF RIVIERA BEACH, PALM BEACH COUNTY, FLORIDA, AS FOLLOWS:

SECTION 1: That the City of Riviera Beach hereby prohibits the practice of Conversion Therapy on patients who are minors and that the foregoing recitals are ratified and affirmed as being true and correct and will be codified and made a part of the City's Code of Ordinance pursuant to §1-8**;**

PROHIBITION OF CONVERSION THERAPY ON MINORS

(1) Intent

The Intent of this Ordinance is to protect the physical and psychological well-being of minors, including but not limited to lesbian, gay, bisexual, transgender and/or questioning youth, from exposure to the serious harms and risks caused by conversion therapy or reparative therapy by licensed providers, including but not limited to licensed therapists. These provisions are exercises of police power of the City for the public safety, health, and welfare; and its provisions shall be liberally construed to accomplish that purpose.

(2) Definitions.

a. *Conversion therapy* or *reparative therapy* means, interchangeably, any counseling, practice or treatment performed with the goal of changing an individual's sexual orientation or gender identity, including, but not limited to,

efforts to change behaviors, gender identity, or gender expression, or to eliminate or reduce sexual or romantic attractions or feelings toward individuals of the same gender or sex. Conversion therapy does not include counseling that provides support and assistance to a person undergoing gender transition or counseling that provides acceptance, support, and understanding of a person or facilitates a person's coping, social support, and development, including sexual orientation-neutral interventions to prevent or address unlawful conduct or unsafe sexual practices, as long as such counseling does not seek to change sexual orientation or gender identity.

b. *Minor* means any person less than eighteen (18) years of age.

c. *Provider* means any person who is licensed by the State of Florida to provide professional counseling, or who performs counseling as part of his or her professional training under Chapters 456, 458, 459, 490 or 491 of the Florida Statutes, as such chapters may be amended, including but not limited to, medical practitioners, osteopathic practitioners, psychologists, psychotherapists, social workers, marriage and family therapists, and licensed counselors. A Provider does not include members of the clergy who are acting in their roles as clergy or pastoral counselors and providing religious counseling to congregants, as long as they do not hold themselves out as operating pursuant to any of the aforementioned Florida Statutes licenses.

(3) Conversion therapy prohibited.

It shall be unlawful for any Provider to practice conversion therapy efforts on any individual who is a minor regardless of whether the person receives monetary compensation in exchange for such services.

(4) Enforcement and civil penalties.

a. Enforcement of this chapter may be done pursuant to Chapter 2 entitled “Administration”, Article VI entitled “Code Enforcement of the City’s Code of Ordinance.

b. The violation of any provisions of this chapter shall be punished by a fine of Two Hundred Fifty Dollars ($250.00) for the first violation and Five Hundred Dollars ($500.00) for each repeated violation. Each day any violation of this chapter occurs shall constitute a separate offense. These penalties shall not preclude any other remedies available at law or in equity, including, injunctive relief in the circuit court.

SECTION 2: All ordinances or parts of ordinances in conflict herewith are hereby repealed.

SECTION 3: Should any section or provision of this Ordinance or any portion, paragraph, sentence or word be declared by a court of competent jurisdiction to be invalid, such decision shall not affect the validity of the remainder of this Ordinance.

SECTION 4: Authority is hereby granted to codify this ordinance as set forth in Section 1 of this Ordinance.

SECTION 5: This Ordinance shall take effect immediately upon its approval and adoption.

PASSED AND APPROVED on the first reading this _____ day of _____, _____.

PASSED AND ADOPTED on second and final reading this _____day of _____, _____.

APPROVED:

_____
THOMAS A. MASTERS
MAYOR

_____
TERENCE D. DAVIS
CHAIRPERSON

ATTEST:

_____
CLAUDENE L. ANTHONY
CERTIFIED MUNICIPAL CLERK
CITY CLERK

_____
KASHAMBA MILLER-ANDERSON
CHAIR PRO TEM

_____
LYNNE L. HUBBARD
COUNCILPERSON

_____
TONYA DAVIS JOHNSON
COUNCILPERSON

_____
DAWN S. PARDO
COUNCILPERSON

1ST READING		2ND & FINAL READING	
MOTIONED BY:_____		MOTIONED BY: _____	
SECONDED BY:_____		SECONDED BY:_____	
L. HUBBARD	_____	L. HUBBARD	_____
K. MILLER-ANDERSON	_____	K. MILLER-ANDERSON	_____
T. DAVIS JOHNSON	_____	T. DAVIS JOHNSON	_____
D. PARDO	_____	D. PARDO	_____
T. DAVIS	_____	T. DAVIS	_____

REVIEWED AS TO LEGAL SUFFICIENCY

_____
ANDREW DEGRAFFENREIDT, III
CITY ATTORNEY

DATE: _____

CITY OF RIVIERA BEACH CITY COUNCIL
AGENDA ITEM SUMMARY

Meeting Date: 5/3/2017

Agenda Category: REGULAR RESOLUTION

Subject: Authorize the re-establishment of the Riviera Beach Education Advisory Committee

---

Recommendation/Motion: **A RESOLUTION OF THE CITY COUNCIL OF THE CITY OF RIVIERA BEACH, PALM BEACH COUNTY, FLORIDA, RE-ESTABLISHING THE RIVIERA BEACH EDUCATION ADVISORY COMMITTEE (RBEAC); SETTING FORTH THE TERMS AND CONDITIONS UNDER WHICH THE COMMITTEE SHALL OPERATE; AND PROVIDING AN EFFECTIVE DATE.**

Originating Dept	Executive	**Costs**
User Dept.	Executive	**Funding Source**
Advertised	No	**Budget Account Number**
Date		
Paper		
Affected Parties	Not Required	

Background/Summary:

In 1992 former Councilperson Hyacinthia Becton presented the need for establishing an Education Advisory Committee in an effort to address unfair treatment of students and schools within the city's boundaries by the Palm Beach County School Board.
At its May 6, 1992 City Council Meeting, the sitting board voted unanimously to establish the Riviera Beach Education Advisory Committee with the active education advocates, from throughout the county, being its board members
In addition to staffing the scholarship program and being the think tank for the Academic Summer Camp, some of their accomplishments include: facilitating Town Hall Meetings that aided in preventing school closures in Riviera Beach; numerous occasions where members advocated for the rights of children from Riviera Beach; one of the founding organizations of the Coalition for Black Student Achievement (CBSA); listed as one of the authors of "Achievement Matters for All" in the School District's Academic Business Plan; one member chaired the CBSA for two years; lobbied the School Board and successfully obtained the first Preference SAC designation in the County for Magnet Programs (Suncoast High School); assisted many parents in getting their child admitted into Suncoast High School's Magnet Programs; advocated for and served on search committees to facilitate assignment of compatible principals to city schools; one member chaired the School District's Compliance Monitoring Committee assisting the School District in developing a plan to obtain release from U. S. Department of Justice Oversight; represented the City as a member of Pam Beach Gardens High School Magnet Advisory Committee; one member has chaired the School District's Advisory Boundary Committee (ABC) for over 10 years; another member has served on the ABC for over 10 years; and advised Mayor and City Council and sought their involvement in education focused initiatives and issues affecting the City.

Fiscal Years

Capital Expenditures

Operating Costs

External Revenues

Program Income (city)

In-kind Match (city)

Net Fiscal Impact

NO. Additional FTE Positions (cumulative)

III. Review Comments

A. Finance Department Comments:

B. Purchasing/Intergovernmental Relations/Grants Comments:

C. Department Director Review:

Contract Start Date

Contract End Date

Renewal Start Date

Renewal End Date

Number of 12 month terms this renewal

Dollar Amount

Contractor Company Name

Contractor Contact

Contractor Address

Contractor Phone Number

Contractor Email

Type of Contract

Describe

ATTACHMENTS:

File Name	Description	Upload Date	Type
RESOLUTION_NO_EDUCATION_ADVISORY_COMMITTEE_(RBEAC)__05032017.docx	RIVIERA BEACH EDUCATION ADVISORY	4/28/2017	Resolution

REVIEWERS:

Department	Reviewer	Action	Date
Finance	Jones, Danny	Approved	4/26/2017 - 8:16 PM

RESOLUTION NO. _____

A RESOLUTION OF THE CITY COUNCIL OF THE CITY OF RIVIERA BEACH, PALM BEACH COUNTY, FLORIDA, RE-ESTABLISHING THE RIVIERA BEACH EDUCATION ADVISORY COMMITTEE (RBEAC); SETTING FORTH THE TERMS AND CONDITIONS UNDER WHICH THE COMMITTEE SHALL OPERATE; AND PROVIDING AN EFFECTIVE DATE.

WHEREAS, in 1992 former Councilperson Hyacinthia Becton presented the need for establishing an Education Advisory Committee in an effort to address unfair treatment of students and schools within the city's boundaries by the Palm Beach County School Board; and

WHEREAS, the function and establishment of the committee was patterned after existing committees in the City of West Palm Beach and the Village of Wellington. At its May 6, 1992 City Council Meeting, the sitting board voted unanimously to establish the Riviera Beach Education Advisory Committee with the active education advocates, from throughout the county, being its board members; and

WHEREAS, a City Council representative has served on the committee as the liaison between the elected officials and the committee for the purpose of keeping the City Council apprised of pending actions and final decisions made by the Palm Beach County School Board; and

WHEREAS, throughout the history of the committee, successful valiant efforts were made resulting in a number of accomplishments that proved to be advantageous to the students and schools within the City's boundaries.

WHEREAS, it is the desire of Council to formally re-establish this committee and establish approved guidelines and procedures.

NOW, THEREFORE, BE IT RESOLVED THE CITY COUNCIL OF THE CITY OF RIVIERA BEACH, PALM BEACH COUNTY, FLORIDA, AS FOLLOWS:

SECTION 1. That the Riviera Beach Education Advisory Committee is hereby formally re-established as follows:

A. PURPOSE:

The Riviera Beach Education Advisory Committee (RBEAC) is hereby re-established and shall serve as a fact-finding and advisory committee to make recommendations to the City Council on issues related to public schools within the city's boundaries and public school students who attend said school or schools within a 5 mile radius. In addition, it will administer the annual award of educational scholarships.

B. DUTIES:

The City of Riviera Beach Education Advisory Committee shall:

1. Monitor all Palm Beach County School Board (school board) activities.

2. Serve as a liaison between the School Board, City Council and the community on school issues.

3. Participate in an information exchange with the administration of each public school within the city or within a five-mile radius of the city who have students who attend that reside in the city.

4. Prepare an annual "State of Schools" report with respect to schools within the city and schools attended by students who reside within city boundaries.

5. Submit recommendations to the City Council for forwarding to the School Board for actions which may be taken regarding support of schools within the City and with respect to proposed legislation at the State and Federal level.

6. Maintain continuous public relations in an effort to improve and maintain a positive image of public schools within the city and highlight successful programs within public schools.

7. Identify and attract State and Federal programs and grants in direct support of public schools within the City.

8. Provide comments and recommendations to the City Council regarding proposed developments and their impacts upon the racial balance of public schools within the city.

9. Develop lines of communication between the School Board, their administrative personnel, the City Council, and parents of school children who reside within the City.

10. Arrange meetings for disseminating information to concerned parents on given public school issues.

11. Invite School Board officials to Committee meetings to answer questions and update the Committee on various school issues and parental concerns including but not limited to School Board plans for redistricting, school busing issues, construction planning for new schools, the progress of school construction and research alternatives to these plans, and proper maintenance of existing schools within the City.

12. Assist the city and public schools within the city in recruiting volunteers to assist public school students before, during, and after school.

13. Contact businesses within the geographical boundaries of the city and businesses outside the geographical boundaries of the city, who conducts business with the city to provide professional skills, materials, financial, or educational support for the schools and scholarship fund.

14. Coordinate with the City's Police Department to improve safety for public school students before, during, and after school.

15. Coordinate with the City's Parks and Recreation Department to improve parks and playgrounds near public schools within the City.

16. Contact the various Chambers of Commerce, real estate groups, and other community groups to implement programs at public schools within the city that benefit public school students.

17. Advise the City Council of Committee findings with respect to the foregoing issues and make recommendations on any referred public school related matter or issue within 30 days or within specified timeframe by the City Council.

18. Assess per capita funding allocations and equipment provided for public schools and students within the city or public schools residential students attend and make recommendations to improve inequities currently and in the future.

19. Administer the awarding of annual scholarships to include soliciting donations from area businesses and/or those who conduct business with the city.

20. Twelve scholarships are to be awarded as follows: eight scholarships shall be awarded to residential students and four scholarships shall be awarded to students of City of Riviera Beach (CRB) employees who is the parent(s), guardian, or close relative (aunt, uncle, or grandparent(s)) and meet the remaining qualifications. In the event, there is not enough funding for all 12 scholarships, awards shall be given to residential students only. In the event, there is excess funding, scholarships shall be awarded with preference given to residential students first followed by students of CRB employees. All other established requirements shall be followed.

21. The City Council's liaison shall not be a part of the scholarship selection process and shall not attempt to affect any decision of the selection process.

C. BOARD ORGANIZATION; QUALIFICATIONS AND TERMS OF OFFICE OF BOARD MEMBERS.

1. The Board shall be composed of nine (9) regular members, one appointment for each district, two appointments from District-at-Large, and one appointment by the mayor; all appointments must be ratified by

majority vote of the City Council. All appointees, with the exception of the high school students, shall serve for the duration of the appointing elected official and shall serve no more than three full consecutive terms unless waived by a majority vote of said council at a Regular City Council Meeting.

2. Board members shall represent education but not

a) an employee of the School Board

b) an organization funded by the School Board (i.e. charter school employee)

c) nor a person affiliated with an employee of the aforementioned;

neighborhood associations, and other community based organizations including but not limited to the NAACP, Urban League of Palm Beach County and Chambers Commerce.

3. In addition, two high school students, in their junior year and with a GPA of at least 2.5, shall serve on the board for two years upon majority vote of the City Council. The students must be a resident of the city or a student at a high school within the city's boundaries or within a 5 mile radius.

4. A City Councilperson shall be selected yearly to serve as the liaison between the Committee and the City Council.

5. All members shall serve at the pleasure of the City Council and without compensation. Vacancies shall be filled within thirty (30) days of the vacancy in the same manner as original appointments and shall remain a committee member for the duration of said filled position.

D. ORGANIZATION; MEETINGS; ANNUAL REPORT

1. The committee shall meet on a regular monthly basis, organize their own meeting agenda, discuss, vote and make recommendations to Council for action on a given topic or issue.

2. The committee shall appoint its own Chairperson, Vice Chairperson and recording Secretary. The Chairperson and Secretary will prepare written reports to be presented to the City Council on recommended proposals, plans, activities, programs or the progress of school construction. Both majority and minority positions may be presented to Council for review.

3. The Chairperson shall have the authority to form subcommittees to investigate or collect data on specific school issues. The chairperson of each subcommittee shall file a report of the subcommittee's findings with the Chairperson or Vice Chairperson.

4. All meetings of the RBEAC are subject to the Sunshine Law and shall be conducted under Robert's Rules of Order. Minutes of all meetings shall be recorded and prepared by the secretary or the Chairperson's designee.

5. Whenever possible, meetings of said committee shall be attended by the City Council's liaison.

E. ADMINISTRATION

The Board shall have technical and logistical support provided as designated by the City Manager or his/her designee. The City Manager or his designee shall be the official city contact with the Committee.

SECTION 2. This Resolution shall take effect immediately upon approval by the City Council.

APPROVED:

THOMAS A. MASTERS
MAYOR

KASHAMBA MILLER-ANDERSON
CHAIRPERSON

ATTEST:

CLAUDENE L. ANTHONY
CERTIFIED MUNICIPAL CLERK
CITY CLERK

TONYA DAVIS JOHNSON
CHAIR PRO TEM

LYNNE L. HUBBARD
COUNCILPERSON

TERENCE D. DAVIS
COUNCILPERSON

DAWN S. PARDO
COUNCILPERSON

REVIEWED AS TO LEGAL SUFFICIENCY

ANDREW DEGRAFFENREIDT, III
CITY ATTORNEY

DATE: _____

MOTIONED BY: _____

SECONDED BY: _____

L. HUBBARD _____

K. MILLER-ANDERSON _____

T. DAVIS JOHNSON _____

D. PARDO _____

T. DAVIS _____

CITY OF RIVIERA BEACH CITY COUNCIL
AGENDA ITEM SUMMARY

Meeting Date: 5/3/2017

Agenda Category: DISCUSSION AND DELIBERATION

Subject: **SOLICITATION OF PROFESSIONAL SERVICES FOR A LABOR ATTORNEY AND A HUMAN RESOURCES PRACTITIONER FOR THE PURPOSES OF REVIEWING CURRENT ORGANIZATIONAL PRACTICES.**

Recommendation/Motion:

Originating Dept	EXECUTIVE	**Costs**	
User Dept.	EXECUTIVE	**Funding Source**	
Advertised	No	**Budget Account Number**	
Date			
Paper			
Affected Parties	Not Required		

Background/Summary:

Fiscal Years
Capital Expenditures
Operating Costs
External Revenues
Program Income (city)
In-kind Match (city)
Net Fiscal Impact
NO. Additional FTE Positions (cumulative)

III. Review Comments

A. Finance Department Comments:

B. Purchasing/Intergovernmental Relations/Grants Comments:

C. Department Director Review:

Contract Start Date

Contract End Date

Renewal Start Date

Renewal End Date

Number of 12 month terms this renewal

Dollar Amount

Contractor Company Name

Contractor Contact

Contractor Address

Contractor Phone Number

Contractor Email

Type of Contract

Describe

ATTACHMENTS:

File Name	Description	Upload Date	Type
MEMO-SOLICITATION_OF_PROF._SERVICES._04252017.pdf	MEMO - SOLICITATION OF PROFESSIONAL SERVICES. 04252017	4/25/2017	Cover Memo

REVIEWERS:

Department	Reviewer	Action	Date
City Manager	Mitchell, Dorothy	Approved	4/26/2017 - 7:22 PM

CITY OF RIVIERA BEACH **CITY MANAGER'S OFFICE**

INTER-DEPARTMENTAL COMMUNICATION

TO: **HONORABLE MAYOR AND CITY COUNCILPERSONS**

FROM: **JONATHAN E. EVANS, CITY MANAGER**

DATE: **APRIL 25, 2017**

SUBJECT: **SOLICITATION OF PROFESSIONAL SERVICES FOR A LABOR ATTORNEY AND A HUMAN RESOURCES PRACTITIONER FOR THE PURPOSES OF REVIEWING CURRENT ORGANIZATIONAL PRACTICES**

Hon. Mayor, Chairman, and Councilmembers, the premise of this email is to inform you of an agenda item that I would like to place on the agenda for approval. The intent behind the respective item is to request an audit by a labor attorney as it relates to the City's hiring practices and procedures.

To begin with, there have been issues that I have uncovered which are certainly disheartening, to include the fact that most of the executive directors in their tenure have never had performance evaluations and this particular inactivity is just a scratch on the surface. It is my desire to effectuate a process whereby an individual(s) with a distinctive legal background and knowledge, can conduct investigatory actions, as well as audits relating to the placement of employees in their respective positions.

This request to engage such professional services, stems from my concern that there may be improprieties in the selection, recruitment, and hiring of positions within the organization. Therefore, in an effort to effectively address these issues, appropriate analyses are required. As part of the criteria to be included in the solicitation, proposers cannot have had past relationships with the City and will be required to report directly to the City Manager.

I would also like to retain the selected firm to conduct investigations to determine if hostile work conditions exist and to ascertain the necessary steps the organization can take to cure any improper past practices. All findings will be addressed immediately and a final report will be presented publicly to the Mayor and City Council at a regularly scheduled Council meeting.

If this pleases the Mayor and City Council, I ask for your support as we embark upon this journey together to ensure that our City is successful.

Respectfully Submitted,

Jonathan E. Evans, MPA, MBA, ICMA-CM
City Manager – Riviera Beach

CITY OF RIVIERA BEACH CITY COUNCIL
AGENDA ITEM SUMMARY

Meeting Date: 5/3/2017

Agenda Category: DISCUSSION AND DELIBERATION

Subject: Discussion for the City of Riviera Beach to implement a Summer Youth Employment (SYEP) and Job Training Program for qualifying Riviera Beach Youths.

Recommendation/Motion: Staff recommends a discussion to implement a Riviera Beach Summer Youth Employment (SYEP) and Job Training Program for the qualifying youths of the City of Riviera Beach.

Originating Dept	Police	**Costs**	-0-
User Dept.	Police	**Funding Source**	
Advertised	No	**Budget Account Number**	
Date			
Paper			
Affected Parties	Not Required		

Background/Summary:

The City of Riviera Beach Summer Youth Employment and Job Training Program (SYEP) offers job coaching and placement with employers in our community.

The goal is to provide summer employment and training opportunities to City youth with businesses and organizations that will provide real-world work experiences.

The SYEP is open to youth ages 14-21 residing in the City of Riviera Beach, and who meet (Jobs and Family Services TAN eligibility guidelines), federal, state, and local low to moderate income eligibility guidelines.

The Riviera Beach SYEP will provide training to 500 City of Riviera Beach youth who will then be placed to work part time at local businesses and organizations.

- Youth will be paid for participating in 36 hours of job coaching between June 12-August 7, 2017.
- Youth will be paid ( ) hours of employment during the SYEP time frame.
- Program participants will spend their summer gaining impactful work and training experience.

The City of Riviera Beach is committed to preparing and training our next generation of business leaders.

The City of Riviera Beach will invite businesses, organizations, schools, churches, and government to serve as a worksite, providing the youth participants with a wholesome employment and real-world work experience for City young persons.

The SYEP will provide for the following services for program participants:

- Youth ages 14-21.
- Pre-screened and vetted by SYEP personnel.
- Youth paired with worksites based on interest and experience.
- Employment period is June 12-August 7, 2017.
- Work experience on job sites.
- Job coaching and workplace preparation by SYEP personnel.
- Youth paid for all hours of program participation.

The City of Riviera Beach SYEP and its worksite partners will provide for eligible youth the opportunity to be exposed to and engaged in work activities where they will learn the basic requirements of various career tracks.

The SYEP will be funded using all available public sector dollars. It is anticipated that the program will be able to attract funding support from the private sector creating a public/private joint funding stream for the program. The current program design requires initial funding to be provided by public sectors.

The following positions are key to creating and implementing a successful Summer Youth Employment Program (SYEP):

SYEP PROJECT DIRECTOR

Responsible for the overall direction, coordination, implementation, execution, control, and completion of the City of Riviera Beach Summer Youth Employment Program (SYEP).

MAIN JOB TASKS AND RESPONSIBILITIES

- Create public/private sustaining funding sources.
- Lead the planning and implementation of project.
- Facilitate the definition of project scope, goals, and deliverables.
- Define project tasks and resource requirements.
- Develop full-scale project plans.
- Develop and approve all SYEP worksites.
- Assemble and coordinate project staff.
- Manage and oversee project budget.
- Manage project resource allocation.
- Plan and schedule project timelines.
- Constantly monitor and report on progress of the project to all stakeholders.
- Present reports defining project progress, problems, and solutions.
- Implement and manage project changes and interventions to achieve project outputs.
- Project evaluations and assessment of result.

SYEP PROJECT MANAGER

Assist the Project Director in the Project coordination, implementation, execution, control, and completion of the City of Riviera Beach Summer Youth Employment Program (SYEP).

MAIN JOB TASKS AND RESPONSIBILITIES

- Assist with the management of project staff.
- Track project deliveries.
- Assist with providing direction and support to the project staff.
- Assist with quality assurance.
- Monitor and report on project staff.
- Assist in the preparation reports defining project progress, problems, and solutions.
- Troubleshoot and manage project changes and interventions as needed.
- Assist with project evaluations and assessments.

SYEP LEAD STAFF ADVOCATE

Assist Senior Management in areas, such as, but not limited to, coordinating staff schedules, coordinating additional mentoring services for youth as needed, and various program monitoring functions.

MAIN JOB TASKS AND RESPONSIBILITIES

- Manages the SYEP Advocate Team.
- Coordinates and manages SYEP Advocates schedules.
- Monitor and manage SYEP Advocates timesheets and log in sheets.
- Provide care management assistance to SYEP Advocates.
- Provide mentoring services for youth and worksites.

Fiscal Years
Capital Expenditures
Operating Costs
External Revenues
Program Income (city)
In-kind Match (city)
Net Fiscal Impact
NO. Additional FTE Positions (cumulative)

III. Review Comments

A. Finance Department Comments:

B. Purchasing/Intergovernmental Relations/Grants Comments:

C. Department Director Review:

Contract Start Date

Contract End Date

Renewal Start Date

Renewal End Date

Number of 12 month terms this renewal

Dollar Amount

Contractor Company Name

Contractor Contact

Contractor Address

Contractor Phone Number

Contractor Email

Type of Contract

Describe

ATTACHMENTS:

File Name	Description	Upload Date	Type
Attachment_Youth_Employment(Front__Back_Pages)_SYEP_Agenda_Item.pdf	Flyer: RB Youth Summer Jobs Program	2/22/2017	Backup Material
SYEP_Background_Summary_Overview.Distr_1.March_2017.pdf	SYEP Background Summary Overview	3/8/2017	Cover Memo

REVIEWERS:

Department	Reviewer	Action	Date
City Manager	Mitchell, Dorothy	Approved	3/29/2017 - 3:52 PM

Riviera Beach

Youth Summer Jobs Program

The City of Riviera Beach Summer Youth Employment and Job Training Program (SYEP) offers job coaching and placement with employers in our community.

The SYEP is open to youth ages 14-21 residing in the City of Riviera Beach, and who meet (Jobs and Family Services TAN eligibility guidelines), federal, state, and local low to moderate income eligibility guidelines.

The SYEP will provide for the following services for program participants:

- Youth ages 14-21.
- Pre-screened and vetted by SYEP personnel.
- Youth paired with worksites based on interest and experience.
- Employment period is June 12-August 7, 2017.
- Work experience on job sites.
- Job coaching and workplace preparation by SYEP personnel.
- Youth paid for all hours of program participation.

The City of Riviera Beach SYEP and its worksite partners will provide for eligible youth the opportunity to be exposed to and engaged in work activities where they will learn the basic requirements of various career tracks.

Our Goal

The goal is to provide summer employment and training opportunities to City youth with businesses and organizations that will provide real-world work experiences.

Our Commitment

The City of Riviera Beach is committed to preparing and training our next generation of business leaders.

Employers

The City of Riviera Beach will invite businesses, organizations, schools, churches, and government to serve as a worksite, providing the youth participants with a wholesome employment and real-world work experience for City young persons.

Funding

The SYEP will be funded using all available public sector dollars. It is anticipated that the program will be able to attach funding support from the private sector creating a public/private joint funding stream for the program. The current program design requires initial funding to be provided by public sectors.

SYEP Leadership

The following positions are key to creating and implementing a successful Summer Youth Employment Program (SYEP): **PROJECT DIRECTOR**, **PROJECT MANAGER** and **LEAD STAFF ADVOCATE**.

SYEP Program

The Riviera Beach SYEP will provide training to 500 City of Riviera Beach youth who will then be placed to work part time at local businesses and organizations.

- Youth will be paid for participating in 36 hours of job coaching between June 12 through August 7, 2017.
- Youth will be paid ( ) hours of employment during the SYEP time frame.
- Program participants will spend their summer gaining impactful work and training experience.

Summer Youth Employment Program
Background/Summary and Overview

The City of Riviera Beach Summer Youth Employment and Job Training Program (SYEP) offers job coaching and placement with employers in our community.

The goal is to provide summer employment and training opportunities to City youth with businesses and organizations that will provide real-world work experiences.

The SYEP is open to youth ages 14-21 residing in the City of Riviera Beach, and who meet (Jobs and Family Services TAN eligibility guidelines), federal, state, and local low to moderate income eligibility guidelines.

The Riviera Beach SYEP will provide training to 500 City of Riviera Beach youth who will then be placed to work part time at local businesses and organizations.

- Youth will be paid for participating in 36 hours of job coaching between June 12-August 4, 2017.
- Youth will be paid $9 per hour for 288 hours of employment during the SYEP time frame.
- Program participants will spend their summer gaining impactful work and training experience.

The City of Riviera Beach is committed to preparing and training our next generation of business leaders.

The City of Riviera Beach will invite businesses, organizations, schools, churches, and government to serve as a worksite, providing the youth participants with a wholesome employment and real-world work experience for City young persons.

The SYEP will provide for the following services for program participants:

- Youth ages 14-21.
- Pre-screened and vetted by SYEP personnel.
- Youth paired with worksites based on interest and experience.
- Employment period is June 12-August 7, 2017.
- Work experience on job sites.
- Job coaching and workplace preparation by SYEP personnel.
- Youth paid for all hours of program participation.

The City of Riviera Beach SYEP and its worksite partners will provide for eligible youth the opportunity to be exposed to and engaged in work activities where they will learn the basic requirements of various career tracks.

The SYEP will be funded using all available public sector dollars. It is anticipated that the program will be able to attract funding support from the private sector creating a public/private joint funding stream for the program. The current program design requires initial funding to be provided by public sectors.

The following positions are key to creating and implementing a successful Summer Youth Employment Program (SYEP). It is important the positions of Project Director and Project Manager be considered and funded immediately, in preparation for the implementation of the program.

SYEP PROJECT DIRECTOR

Responsible for the overall direction, coordination, implementation, execution, control, and completion of the City of Riviera Beach Summer Youth Employment Program (SYEP).

MAIN JOB TASKS AND RESPONSIBILITIES

- Create public/private sustaining funding sources.
- Lead the planning and implementation of project.
- Facilitate the definition of project scope, goals, and deliverables.
- Define project tasks and resource requirements.
- Develop full-scale project plans.
- Develop and approve all SYEP worksites.
- Assemble and coordinate project staff.
- Manage and oversee project budget.
- Manage project resource allocation.
- Plan and schedule project timelines.
- Constantly monitor and report on progress of the project to all stakeholders.
- Present reports defining project progress, problems, and solutions.
- Implement and manage project changes and interventions to achieve project outputs.
- Project evaluations and assessment of result.

SYEP PROJECT MANAGER

Assist the Project Director in the Project coordination, implementation, execution, control, and completion of the City of Riviera Beach Summer Youth Employment Program (SYEP).

MAIN JOB TASKS AND RESPONSIBILITIES

- Assist with the management of project staff.
- Track project deliveries.
- Assist with providing direction and support to the project staff.
- Assist with quality assurance.
- Monitor and report on project staff.
- Assist in the preparation reports defining project progress, problems, and solutions.
- Troubleshoot and manage project changes and interventions as needed.
- Assist with project evaluations and assessments.

SYEP LEAD STAFF ADVOCATE

Assist Senior Management in areas, such as, but not limited to, coordinating staff schedules, coordinating additional mentoring services for youth as needed, and various program monitoring functions.

MAIN JOB TASKS AND RESPONSIBILITIES

- Manages the SYEP Advocate Team.
- Coordinates and manages SYEP Advocates schedules.
- Monitor and manage SYEP Advocates timesheets and log in sheets.
- Provide care management assistance to SYEP Advocates.
- Provide mentoring services for youth and worksites.

City of Riviera Beach
Estimated Budget

Summer Youth Employment Program (SYEP)

Program Director and Program Manager Costs

SYEP Project Director

Rate (per hour)	Hours (40 per week)	Salary (hours x rate)	FICA (Salary x .0765)	Total Wages (salary + FICA)
35.00	320	11,200.00	856.80	12,056.80
			Total Employees	1
			Sub Total	12,056.80

SYEP Project Manager

Rate (per hour)	Hours (40 per week)	Salary (hours x rate)	FICA (Salary x .0765)	Total Wages (salary + FICA)
25.00	320	8,000.00	612.00	8,612.00
			Total Employees	1
			Sub Total	8,612.00

Total Cost of Project Director and Manager $ 20,668.80

City of Riviera Beach
Estimated Budget

Summer Youth Employment Program (SYEP)
8 Weeks

Youth Employee

Rate (per hour)	Hours (35 per week)	Salary (hours x rate)	FICA (Salary x .0765)	Total Wages (salary + FICA)
9.00	288	2,592.00	198.29	2,790.29

Total Employees	500
Sub Total	1,395,144.00

SYEP Project Director

Rate (per hour)	Hours (40 per week)	Salary (hours x rate)	FICA (Salary x .0765)	Total Wages (salary + FICA)
35.00	320	11,200.00	856.80	12,056.80

Total Employees	1
Sub Total	12,056.80

SYEP Project Manager

Rate (per hour)	Hours (40 per week)	Salary (hours x rate)	FICA (Salary x .0765)	Total Wages (salary + FICA)
25.00	320	8,000.00	612.00	8,612.00

Total Employees	1
Sub Total	8,612.00

SYEP Lead Staff Advocates

Rate (per hour)	Hours (40 per week)	Salary (hours x rate)	FICA (Salary x .0765)	Total Wages (salary + FICA)
15.00	320	4,800.00	367.20	5,167.20

Total Employees	20
Sub Total	103,344.00

Total Wages	1,519,156.80
Liability Ins., W/C, est.(2%)	30,383.14
Operating Expenses (1%)	15,191.57
Total Project Budget	**$ 1,564,731.50**

CITY OF RIVIERA BEACH CITY COUNCIL
AGENDA ITEM SUMMARY

Meeting Date: 5/3/2017

Agenda Category: DISCUSSION AND DELIBERATION

Subject: DISCUSSION AND DELIBERATION ON THE WELLNESS RESORT AND SPA PROJECT, APPROVED AT 3100 NORTH OCEAN DRIVE, BY CITY RESOLUTION NO. 143-15 ON OCTOBER 12, 2015.

Recommendation/Motion: Discussion and Deliberation on the Wellness Resort and Spa Project.

Originating Dept	Community Development	**Costs**	N/A
User Dept.	City	**Funding Source**	N/A
Advertised	No	**Budget Account Number**	N/A
Date			
Paper			
Affected Parties	Not Required		

Background/Summary:

On October 12, 2015, a site plan for the Wellness Resort and Spa was approved by City Council by Resolution No. 143-15. The project history and conditions of approval are provided within said resolution which has been attached to this item as back up material. The development team for the Wellness Resort and Spa have requested amendments to the originally approved site plan. These requests are outlined within the March 17, 2017, correspondence (attached) from Yashpal Kakkar, Owner's Representative. The amendment request includes modified building dimensions, reduced unit count and modification of unit types, as well as new building elevations. Although the requested amendments may fall within the Administrative Approval powers of City Staff, as provided within Section 2, No. 6 or Resolution 143-15, this item is being presented for public review under discussion and deliberation to ensure process transparency.

Fiscal Years	N/A
Capital Expenditures	N/A
Operating Costs	N/A
External Revenues	N/A
Program Income (city)	N/A
In-kind Match (city)	N/A
Net Fiscal Impact	N/A
NO. Additional FTE Positions (cumulative)	N/A

III. Review Comments

A. Finance Department Comments:

B. Purchasing/Intergovernmental Relations/Grants Comments:

C. Department Director Review:

Contract Start Date

Contract End Date

Renewal Start Date

Renewal End Date

Number of 12 month terms this renewal

Dollar Amount

Contractor Company Name

Contractor Contact

Contractor Address

Contractor Phone Number

Contractor Email

Type of Contract

Describe

ATTACHMENTS:

ATTACHMENTS:

File Name	Description	Upload Date	Type
1_-_Resolution_No._143-15__3100_N._Ocean_Drive__Wellness_Resort_and_Spa_(FKA_Amrit).pdf	1 - Resolution No. 143-15, 3100 N. Ocean Drive, Wellness Resort and Spa (FKA Amrit)	4/10/2017	Backup Material
2_-_Exhibit__A___Site_Plan__Oct._12__2015_City_Council_Meeting.pdf	2 - Exhibit 'A', Site Plan, Oct. 12, 2015 City Council Meeting	4/10/2017	Backup Material
3_-_Exhibit__B___Landscape_Plan__Oct._12__2015_City_Council_Meeting.pdf	3 - Exhibit 'B', Landscape Plan, Oct. 12, 2015 City Council Meeting	4/10/2017	Backup Material
4_-_Exhibit__C___Elevations_(N_S_E_W)_Oct._12__2015_City_Council_Meeting.pdf	4 - Exhibit 'C', Elevations (N,S,E,W) Oct. 12, 2015 City Council Meeting	4/10/2017	Backup Material
5_-_Letter_Re_Site_Plan_Amendment__April_3__2017.pdf	5 - Letter Re Site Plan Amendment, April 3, 2017	4/10/2017	Backup Material
6_-_Letter_Re_Plat_April_3__2017.pdf	6 - Letter Re Plat April 3, 2017	4/10/2017	Backup Material
7_-_Letter_Site_Plan_Review_Response_4-4-17.pdf	7 - Letter Site Plan Review Response_4-4-17	4/10/2017	Backup Material
8_-_Exhibits_to_Letter_Site_Plan_Review_Response_4-4-17.pdf	8 - Exhibits to Letter Site Plan Review Response_4-4-17	4/10/2017	Backup Material
9_-_Approved_and_Proposed_Site_Plan_-_Tower_Outline.pdf	9 - Approved and Proposed Site Plan - Tower Outline	4/10/2017	Backup Material
10_-_032817_Memo_RE_Wellness_Resort_Vesting_of_Site_Plan_and_Extension_of_Development_Order_Pursuant_to_Section_252.363__FS.pdf	10 - 032817 Memo RE Wellness Resort Vesting of Site Plan and Extension of Development Order Pursuant to Section 252.363, FS	4/10/2017	Backup Material

REVIEWERS:

Department	Reviewer	Action	Date
Community Development	Gagnon, J	Approved	4/10/2017 - 5:33 PM
City Manager	Evans, Jonathan	Approved	4/12/2017 - 6:16 PM

CITY OF RIVIERA BEACH

600 WEST BLUE HERON BLVD. • RIVIERA BEACH, FLORIDA 33404 • (561) 845-4090 • Fax (561) 840-3438

OFFICE OF THE CITY CLERK
Claudene L. Anthony, CMC
City Clerk

STATE OF FLORIDA	)	
	)	
COUNTY OF PALM BEACH	)	**SS.**
	)	
CITY OF RIVIERA BEACH	)	

I, CLAUDENE L. ANTHONY, CERTIFIED MUNICIPAL CLERK, CITY CLERK OF THE CITY OF RIVIERA BEACH, PALM BEACH COUNTY, FLORIDA DO HEREBY CERTIFY THAT THIS IS A TRUE AND CORRECT COPY OF Resolution 143-15

AS SHOWN IN THE RECORDS OF THE CITY ON FILE IN THE OFFICE OF THE CITY CLERK.

IN WITNESS WHEREOF, I HAVE HEREUNTO SET MY HAND AND AFFIXED THE SEAL OF THE CITY OF RIVIERA BEACH, FLORIDA, DONE THIS 14th **DAY OF,** November, 2015.

(SEAL)

CLAUDENE L. ANTHONY, CMC
CITY CLERK

RESOLUTION NO. 143-15

A RESOLUTION OF THE CITY COUNCIL OF THE CITY OF RIVIERA BEACH, PALM BEACH COUNTY, FLORIDA, APPROVING AN APPLICATION FROM YASHPAL KAKKAR, AGENT FOR PROPERTY OWNER DINESH PANDYA, TRUSTEE, (SP-14-08) REQUESTING SITE PLAN APPROVAL TO DEVELOP 7.1 ACRES OF LAND AT 3100 NORTH OCEAN DRIVE, KNOWN BY PARCEL CONTROL NUMBER 56-43-42-26-01-001-0030, AND 56-43-42-27-03-013-0120 IN ORDER TO CONSTRUCT TWO (2) 20-STORY HIGH-RISE BUILDINGS, NAMED THE WELLNESS RESORT AND SPA, CONSISTING OF 150 RESORT HOTEL ROOMS AND 209 RESORT HOTEL SUITES, WESTWARD OF THE 1979 COASTAL CONSTRUCTION CONTROL LINE, LOCATED WITHIN THE RESORT HOTEL (RH) ZONING DISTRICT; AND PROVIDING AN EFFECTIVE DATE.

WHEREAS, 3100 North Ocean Drive has a Resort Hotel (RH) Zoning Designation, and consists of two parcels known by Parcel control number 56-43-42-26-01-001-0030 and 56-43-42-27-03-013-0120, which totals approximately 7.1 acres; and

WHEREAS, Section 31-57 of the City of Riviera Beach Code of Ordinances establishes requirements for site plan review by the City Council; and

WHEREAS, the owner of 3100 North Ocean Drive, Dinesh Pandya, Trustee, submitted a site plan application for the "Wellness Resort and Spa" on April 1, 2014 (City staff site plan number SP-14-08) proposing to develop two 20-story high-rise buildings, consisting of 150 resort hotel rooms and 209 resort hotel suites as well as a +/- 30,000 square foot spa and also +/- 10,000 square feet of restaurant and bar space; and

WHEREAS, in July of 2014, Ordinance 4047 was approved by City Council initiating a moratorium regarding potential amendments to development setbacks on the Atlantic Ocean coastline on Singer Island; and

WHEREAS, in May of 2015, Ordinance 4061 was approved by City Council adopting new coastal setback development regulations, amending the easternmost development setback line within the Resort Hotel (RH) Zoning District from the 1979 Coastal Construction Control Line to the 1997 Coastal Construction Control line, resulting in a greater development setback from the Atlantic Ocean coastline; and

WHEREAS, the Wellness Resort and Spa site plan application was submitted prior to the July 2014 moratorium and proposes construction of the easternmost 20-

story tower west of the 1979 Coastal Construction Control Line, and east of the 1997 Coastal Construction Control Line; and

WHEREAS, historically, in October of 2004, The City's Zoning Board of Adjustment reviewed a variance application for 3100 North Ocean Drive and granted three variances as provided below:

1. "The current regulation under Section 31-529 (8) limits the east to west length to 200 feet. The applicant is requesting a 170 foot east to west variance for the building, which would allow a 370 foot long building."
2. "The current regulation under Section 31-529 (7) limits the north south width to 120 feet. The applicant is requesting a 75 foot north to south width variance for the building, which would allow a 195 foot wide building."
3. "Section 31-527 defines a high-rise structure as any part of a structure three stories in height or more. The applicant is requesting a six story variance from the high-rise definition."; and

WHEREAS, the Zoning Board of Adjustment granted the three aforementioned variances with the following condition, "The applicant shall utilize the requested variances to develop the property substantially consistent with the elevation and site plan presented to the zoning board of adjustment."; and

WHEREAS, the historic elevation and site plan presented to the Zoning Board of Adjustment in 2004 proposed a 20-story tower to the eastern portion of the property and a 9-story structure to the west, which is known as the "Amrit" project; and

WHEREAS, the current Wellness Resort and Spa site plan application proposes modified building elevations, massing and site configuration than the Amrit site plan; and

WHEREAS, the Wellness Resort and Spa site plan application proposes to utilize a portion of variance number 1 (267 feet versus 370 feet, east to west building length) and variance number 2 (193 feet versus 195 feet, north to south building width), and does not propose to utilize variance number 3; and

WHEREAS, in accordance with City Resolution 236-04, the applicant held a public community meeting on Singer Island, at 3100 North Ocean Drive, on July 13, 2015; and

WHEREAS, on August 27, 2015, the Planning and Zoning Board, an advisory board to the City Council, reviewed the Wellness Resort and Spa site plan application and City staff report, which included the Site Plan, Landscape Plan, and building

elevations attached hereto as Exhibit "A", "B", and "C" and recommended approval with an affirmative vote of 6 to 1; and

WHEREAS, the City Council desires to approve the application for Site Plan approval from Dinesh Pandya, Trustee, to develop two 20-story high-rise buildings, consisting of 150 resort hotel rooms and 209 resort hotel suites as well as a +/- 30,000 square foot spa and also +/- 10,000 square feet of restaurant and bar space, within the Resort Hotel (RH) zoning district, at 3100 North Ocean Drive.

NOW, THEREFORE, BE IT RESOLVED BY THE CITY COUNCIL OF THE CITY OF RIVIERA BEACH, PALM BEACH COUNTY, FLORIDA AS FOLLOWS:

SECTION 1. The City Council finds that the application for Site Plan approval from Dinesh Pandya, Trustee, to develop two 20-story high-rise buildings, consisting of 150 resort hotel rooms and 209 resort hotel suites as well as a +/- 30,000 square foot spa and also +/- 10,000 square feet of restaurant and bar space, within the Resort Hotel (RH) zoning district, at 3100 North Ocean Drive, parcel control number 56-43-42-26-01-001-0030 and 56-43-42-27-03-013-0120, is substantially consistent with the site plan and elevation(s) provided to the Zoning Board of Adjustment in 2004 (VA-04-03) and also consistent with the City's Comprehensive Plan and the City's Land Development Regulations.

SECTION 2. The City Council approves the Wellness Resort and Spa site plan application from Dinesh Pandya, Trustee (hereinafter "developer" or Wellness Resort and Spa"), with the following conditions:

1. A two-year landscaping performance bond for one hundred and ten percent (110%) of the value of landscaping and irrigation shall be required before the final certificate of occupancy is issued, in accordance with City Code of Ordinances Section 31-603.

2. All future advertising must state that the development is located in the City of Riviera Beach. Fees and penalties in accordance with City Code Sec. 31-554 will be levied against the property owner and/or business for violation of this condition.

3. Construction must be initiated within 18 months of the effective date of this resolution in accordance with Section 31-60(b), of the City Code of Ordinances. Demolition, site preparation or land clearing shall not be considered construction. Building permit application and associated plans and documents shall be submitted in its entirety and shall not be accepted by City staff in a partial or incomplete manner, per the Florida Building Code.

4. This development must receive final Certificate of Occupancy from the City for all buildings and units approved within five years of the approval of this resolution (by

October 12, 2020) or the resolution shall be considered null and void, requiring the applicant to resubmit application for site plan approval and re-initiate the site plan approval process.

5. Once this resolution is passed and approved, and if litigation ensues, this resolution is upheld by a court of competent jurisdiction and all appeal periods have expired, this resolution shall supersede any previous site plan approval resolutions associated with this property, causing previous site plan approval resolutions to be null and void.

6. City council authorizes City staff to approve future amendments to this site plan administratively so long as the site plan does not deviate greater than five percent (5%) from the originally approved submittal.

7. Guest parking spaces denoted on the site plan shall be maintained for guest use and may not be sold or reserved for private use.

8. Prior to sale of individual units, the developer shall advise potential owners that this property and the adjacent property to the north have a Resort Hotel Zoning and Future Land Use Designation, thus, customary property uses and events are to be expected, including weddings and other gatherings that may include music, etc.

9. A unity of title for parcels known by parcel control number 56-43-42-26-01-001-0030, and 56-43-42-27-03-013-0120 shall be completed and provided to the City prior to issuance of a City building permit.

10. A sea turtle site lighting plan shall be completed by the developer, and approved by Palm Beach County Environmental Resources Management and submitted to the City prior to issuance of a City building permit.

11. Building height for the Wellness Center and Spa proposal must adhere to City Land Development Regulations, specifically Sec. 31-529(4), "*Maximum building height*: 20 stories or 200 feet, excluding mechanical facilities, ornamental towers and antennas, which shall not exceed twenty feet in additional height."

12. A 5 foot public access easement on the south side of the property as indicated on the site plan shall be granted and maintained in perpetuity by the property owner. The southernmost fence shall be relocated to the north side of the 5 foot public easement to provide for access.

13. Existing pathways through the dune area from the access easements to the north and south of the property shall remain intact and unaltered by this proposal.

14. Ten percent (10%) of upper management jobs will be targeted for preference to qualified Riviera Beach residents for a minimum of three years from approval, with semi-annual employment status reports provided to the City Council.

15. Wellness Resort and Spa will not voluntarily apply for tax abatement for the property to reduce taxes due to the City for a time period of ten years after issuance of Certificate of Occupancy.

16. Neither Wellness Resort and Spa nor its successors will ask applicants for employment about past criminal history until an offer for employment is extended.

SECTION 3. The associated site plan, landscape plan and elevations are attached hereto as Exhibit "A", "B" and "C" and shall be archived as a part of this resolution.

SECTION 4. Should any one or more of the provisions or elements of this resolution be held invalid, such provision or element shall be null and void, and shall be deemed separate from the remaining provisions or elements and shall in no way affect the validity of any of the remaining provisions or elements of this resolution.

SECTION 5. This resolution shall take effect immediately upon approval.

PASSED and APPROVED this 12th **day of** OCTOBER **, 2015.**

[REMAINDER OF PAGE INTENTIONALLY BLANK]

APPROVED:

THOMAS A. MASTERS
MAYOR

DAWN S. PARDO
CHAIRPERSON

ATTEST:

CLAUDENE L. ANTHONY
CERTIFIED MUNICIPAL CLERK
CITY CLERK

TERENCE D. DAVIS
CHAIR PRO TEM

BRUCE A. GUYTON
COUNCILPERSON

KASHAMBA L. MILLER-ANDERSON
COUNCILPERSON

CEDRICK A. THOMAS
COUNCILPERSON

MOTIONED BY: C. THOMAS

SECONDED BY: T. DAVIS

B. GUYTON	AYE
K. MILLER-ANDERSON	AYE
C. THOMAS	AYE
D. PARDO	NAY
T. DAVIS	AYE

REVIEWED AS TO LEGAL SUFFICIENCY

PAMALA H. RYAN, B.C.S.
CITY ATTORNEY

DATE: 11/4/15

Exhibit 'A', Site Plan, Oct. 12, 2015 City Council Meeting

SITE PLAN INFORMATION

PROPOSED LAND USAGE	SFT	ACRES
TOTAL SITE AREA	309,556	7.106

NUMBER OF UNITS

EASTERN TOWER	150 HOTEL ROOMS
	102 HOTEL SUITES
WESTERN TOWER	107 HOTEL SUITES
TOTAL	359 UNITS

ARCHITECTURE

EASTERN TOWER

BUILDING LENGTH	267'-4"
BUILDING WIDTH	86'-8"

WESTERN TOWER

BUILDING LENGTH	193'=0"
BUILDING WIDTH	73'-2"

PARKING DATA

GARAGE LEVEL 1 PARKING SPACES/ MECHANICAL DBL STACKED	200
GARAGE LEVEL 2 PARKING SPACES/MECHANICAL DBL STACKED	198
GARAGE LEVEL 3 PARKING SPACES/MECHANICAL DBL STACKED	198
SURFACE PARKING	11
TOTAL PARKING SPACES REQUIRED	387
(20% MEAHOP Discount applied)	
TOTAL PARKING SPACES PROVIDED	607
TOTAL H.C SPACES PROVIDED	20

AREA CALCULATIONS

EASTERN TOWER AREA

LEVEL 1 ENCLOSED AREA	46,425
LEVEL 2 ENCLOSED AREA	22,205
LEVEL 3 ENCLOSED AREA	24,108
LEVEL 4 ENCLOSED AREA	20,730
LEVEL 5 ENCLOSED AREA	20,176
LEVEL 6-20 ENCLOSED AREA	258,672
EASTERN TOWER TOTAL	392,136

WESTERN TOWER AREA

LEVEL 3 ENCLOSED AREA	16,853
LEVEL 4-20 ENCLOSED AREA	208,920
WESTERN TOWER TOTAL	225,773
TOTAL	617,909

GARAGE LEVEL 1	66,771
GARAGE LEVEL 2	66,627
GARAGE LEVEL 3	56,360

FAR

FLOOR AREA RATIO	2.0

LAND CALCULATIONS	SFT	ACRES
PERVIOUS AREA	194,616	4.466
IMPERVIOUS AREA	114,940	2.64

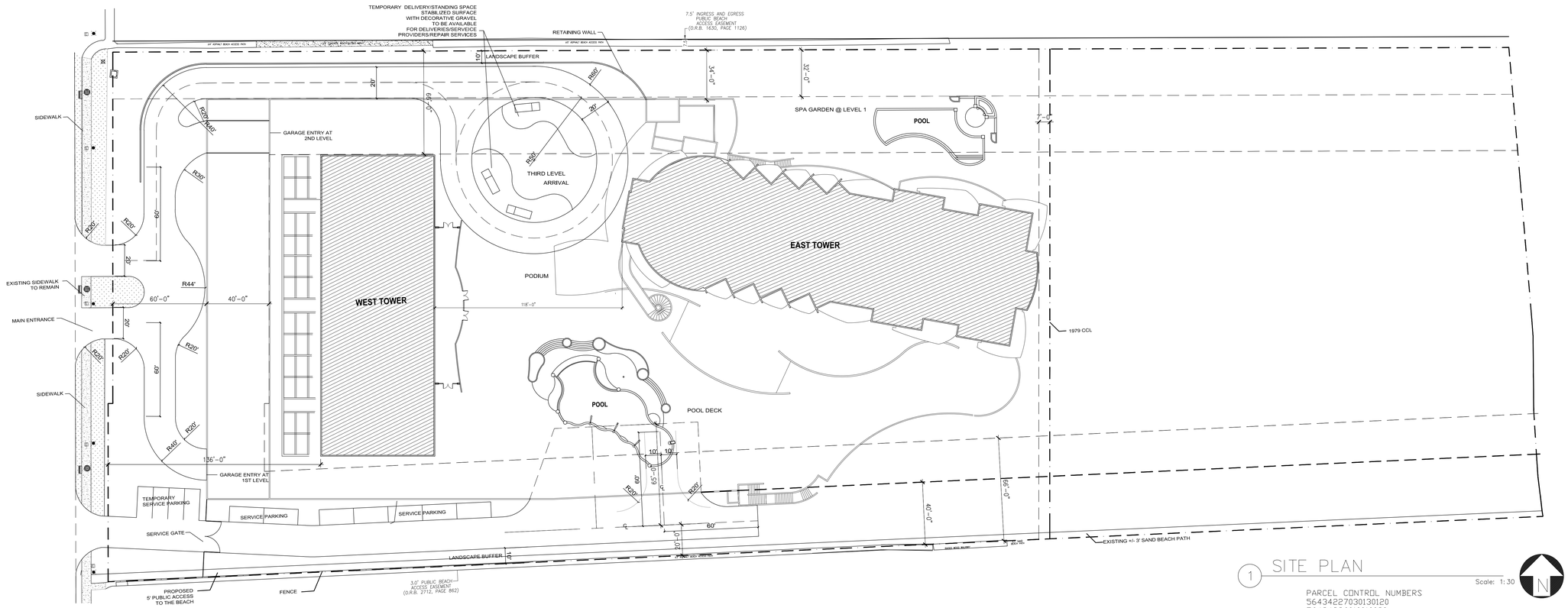

1 SITE PLAN

Scale: 1:30

PARCEL CONTROL NUMBERS
56434227030130120
56434226010010030

30 15 0 30 60
GRAPHIC SCALE
(IN FEET)

S4 design llc
architecture
7995 SW 147 Street, Palmetto Bay, FL 33158
305 431 2996. E-mail: don@s4designllc.com

RESORT HOTEL
WELLNESS RESORT
3100 N. OCEAN DRIVE
SINGER ISLAND, RIVIERA BEACH, FLORIDA

SITE PLAN

SCALE :AS NOTED

DATE : **JANUARY 5, 2015**
PROJECT NUMBER :
DRAWN BY :
FILE NAME :
BACKGROUND DATE :

REVISION :	DATE :	BY :
1 7' SETBACK	08/02/15	

A-101

Exhibit 'B', Landscape Plan, Oct. 12, 2015 City Council Meeting

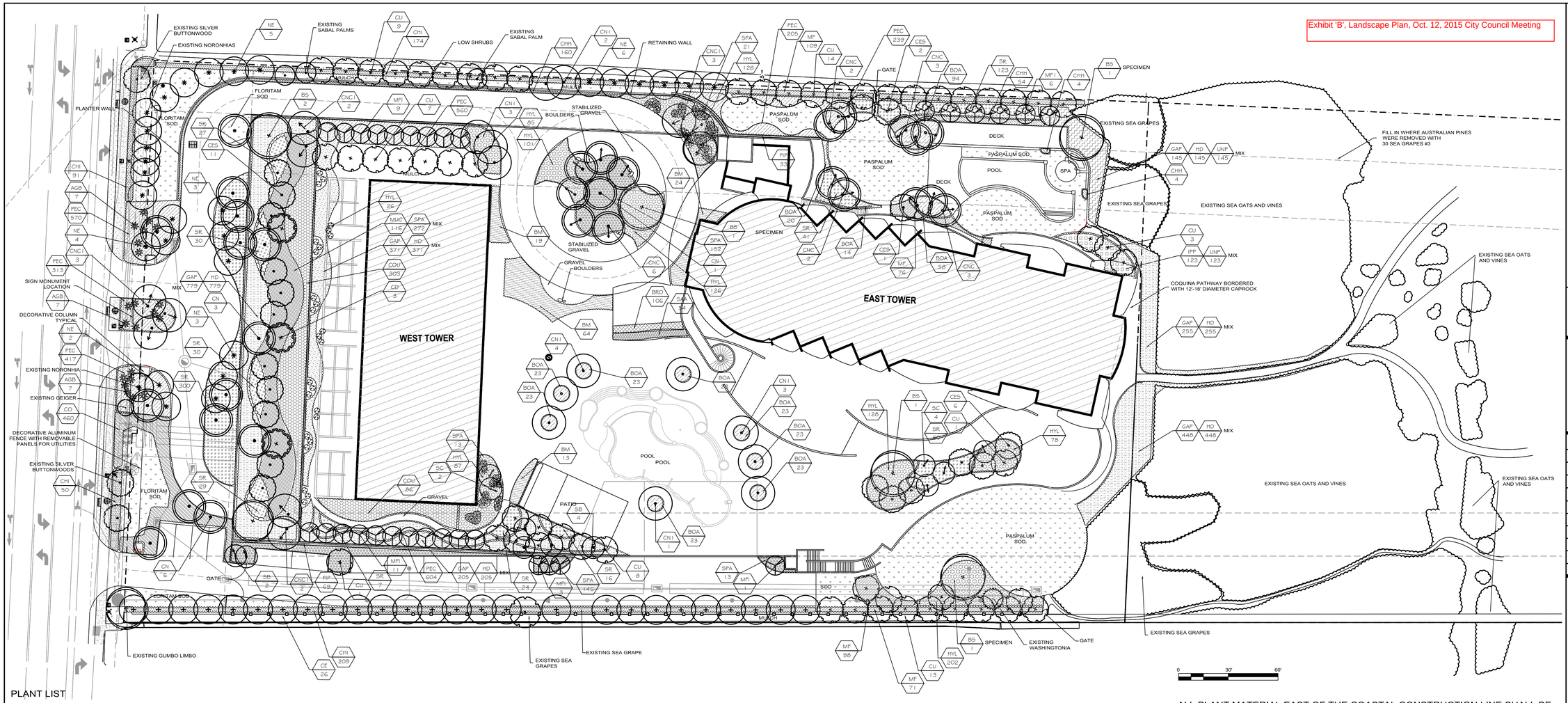

PLANT LIST

SYM	QTY	BOTANICAL	COMMON	SIZE AT TIME OF PLANTING	SPACING	SIZE AT MATURITY	NATIVE?	RATE OF GROWTH	DROUGHT TOLLERANCE	SALT TOLLERANCE	LIGHT REQUIR.	NUTRITION NUTRITION	WIND RESISTANCE	ECOLOGICAL IMPORTANCE
		SHADE TREES												
BS	6	*BURSERA SIMARUBA*	GUMBO LIMBO	12'x5' , 6" CT 2" CAL.	AS SHOWN	40'x35'	Y	H	H	H	M, H	L	H	food (M), cover (M)
CD	3	*COCCOLOBA DIVERSIFOLIA*	PIGEON PLUM	12'x5' , 6" CT 2" CAL.	AS SHOWN	30'X15'	Y	M	H	H	H	M	M	food (H), cover (H)
CU	56	*COCCOLOBA UVIFERA*	SEA GRAPE	12'x5' , 6" CT 2" CAL.	AS SHOWN	30'x25'	Y	M	H	H	M, H	L	H	food (M), cover (H)
CE	26	*CONOCARPUS ERECTUS*	GREEN BUTTONWOOD	12'x5' , 6" CT 2" CAL.	AS SHOWN	40'X20'	Y	M	H	H	H	L	M	food (H), cover (H),
CES	20	*CONOCARPUS ERECTUS SERICEUS*	SILVER BUTTONWOOD MULTISTEM	12'x5' , 6" CT 1.5" CAL. PER STEM	AS SHOWN	25'x20'	Y	M	H	H	H	L	H	food (H), cover (H),
NE	23	*NORONHIA EMARGINATA*	MADAGASCAR OLIVE	12'x5' , 6" CT 2" CAL.	AS SHOWN	25'x20'		S	H	H	H	M	M	
		ACCENT NATIVE TREES												
MF1	30	*MYRCIANTHES FRAGRANS*	SIMPSON'S STOPPER MULTISTEM	10'x5', 5' CT , 3 STEMS MIN 1"CAL	AS SHOWN	20'x15'	Y	S	H	H	M,H	L	H	food (H), cover (H),
		PALMS												
CN1	13	*COCOS NUCIFERA* GREEN MALAYAN	COCONUT PALM GREEN MALAYAN	18'-30' WD	AS SHOWN	60'		M	H	H	H	H	H	
CNC1	10	*COCOS NUCIFERA* GREEN MALAYAN	COCONUT PALM GREEN MALAYAN	18-30' WD CT CURVED TRUNK	AS SHOWN	60'		M	H	H	H	H	H	
CN	15	*COCOS NUCIFERA* MAYPAN	COCONUT PALM MAYPAN	8-14' CT	AS SHOWN	60'		M	H	H	H	H	H	
CNC	16	*COCOS NUCIFERA* MAYPAN	COCONUT PALM MAYPAN	8-14' CT CURVED TRUNK	AS SHOWN	60'		M	H	H	H	H	H	
SC	6	*SABAL PALMETTO*	SABAL PALM CURVED	20-28' O.A., CURVED TRUNK	AS SHOWN	40'	Y	L	H	H	H	L	H	
SB	6	*SABAL PALMETTO*	SABAL PALM	14-28' O.A. , SLICK	AS SHOWN	40'	Y	L	H	H	M, H	L	H	
		SHRUBS												
AGB	21	*AGAVE*	BLUE AGAVE	#15	AS SHOWN									
BM	120	*BAMBUSA MALINGENSIS*	SEABREEZE BAMBOO	#15	4' O.C.									
BOA	370	*BORRICHIA ARBORESCENS*	SEA OXEYE DAISY	#1	24" O.C.	2-4'	Y	S	M	H	H	L	H	food (M), cover (M), attracts butterflies
CHI	524	*CHRYSOBALANUS ICACO*	COCOPLUM	#7	24" O.C.	5'	Y	M, H	M	M	M,H	L	H	food (H), cover (H),dune stabilizer, honey plant
CHH	222	*CHRYSOBALANUS ICACO 'HORIZONTALIS'*	PROSTRATE COCOPLUM	#3	24" O.C.	2'	Y	M	H	M	H	L	H	edible fruits attractive to wildlife (H)
CO	460	*COCCOLOBA UVIFERA*	SEA GRAPE	#3FULL	24" O.C.		Y	M	H	H	M, H	L	H	food (H), cover (H),dune stabilizer, honey plant
COU	389	*COCCOLOBA UVIFERA*	SEA GRAPE	#7 FULL	36" O.C.		Y	M	H	H	M, H	L	H	food (H), cover (H),dune stabilizer, honey plant
GAP	2203	*GAILLARDIA PULCHELLA*	BLANKET FLOWER	#1 FULL	18" O.C.	2'	Y	H	H	H	H	L	H	
HD	2203	*HELIANTHUS DEBILIS*	BEACH/DUNE SUNFLOWER	4" POT	18" O.C.	1'-2'	Y	H	H	H	H	L	H	dune stabilizer, attracts butterflies, pollinators
HYL	987	*HYMENOCALLIS LATIFOLIA*	SPIDER LILY	#3 FULL	30" O.C.	3'	Y	H	H	H	H, M	L	H	
MUC	116	*MUHLENBERGIA CAPILLARIS*	MUHLY GRASS/HAIR GRASS	#3	36" O.C.	1'-3'	Y	M	H	H	M, H	L	H	attracts beneficial insects (ladybug bittles), cover (H)
MF	354	*MYRCIANTHES FRAGRANS*	SIMPSON'S STOPPER	#7	24" O.C.		Y	S	H	H	M,H	M		food (H), cover (H),
SAA	54	*SCHEFFLERA ARBORICOLA*	GREEN SCHEFFLERA	#10	24" O.C.									
SR	687	*SERENOA REPENS*	SILVER SAW PALMETTO	#3 FULL	36" O.C.	6'-10'	Y	L	H	H	M, H	L		food (H), cover (H)
SPA	617	*SPARTINA BAKERI*	SMOOTH CORDGRASS	#1	36" O.C.	3'-6'	Y	M	H	M	H	L		good stabilizer of dunes
UNP	268	*UNIOLA PANICULATA*	SEA OATS	#1	18" O.C.	3'-6'	Y	H	H	H	H	L		stabilizer of beach dunes
		GROUNDCOVERS AND VINES												
BRO	106	*BROMELIADS*	BROMELIADS MIX VARIETIES	9" POTS	18" O.C.							L	M	
FP	102	*FICUS PUMILA*	CREEPING FIG	#1 FULL	3' O.C.			M	H		L,M	L	H	
IPP	123	*IPOMOEA PES-CAPRAE*	RAILROAD VINE	#1	18" O.C.	16"X30"	Y	H	H	H	H	L	H	dune restoration, stabilization
PEC	2908	*PEPEROMIA OBTUSIFOLIA*	PEPEROMIA	#1	18" O.C.	6"x24"	Y	M	M	M	L	L	H	
		L - LOW, **M** - MEDIUM, **H** - HIGH												

ALL PLANT MATERIAL EAST OF THE COASTAL CONSTRUCTION LINE SHALL BE HAND WATERED UNTIL ESTABLISHED. A TEMPORARY IRRIGATION SYSTEM MAYBE INSTALLED UNTIL PLANTS ARE ESTABLISHED IF APPROVED BY PBC ERM.

ANY DUNE MODIFICATIONS WILL REQUIRE ADDITIONAL PERMITTING AND APPROVALS FROM PBC ERM AND DEP.

NO LIGHTING OR TREE PLANTING PERMITTED TO BE CONSTRUCTED/INSTALLED ABOVE THE CITY'S EXISTING WATER OR SEWER LINES.

OWNER WILL BE RESPONSIBLE FOR ANY SHRUBS OR SOD REMOVAL AND REPLACEMENT NECESSARY FOR FUTURE UTILITY WORK

ALL LANDSCAPING IN THE A1A RIGHT OF WAY FRONTING THE PROPERTY SHALL BE THE MAINTENANCE RESPONSIBILITY OF THE PROJECT.

IF YOU DIG FLORIDA...
CALL US FIRST!
1-800-432-4770
SUNSHINE STATE ONECALLING OF FLORIDA, INC.
IT'S THE LAW

NOTE:
INDICATED UTILITIES ARE APPROXIMATE.
CONTRACTOR IS RESPONSIBLE FOR VERIFICATION OF ALL UTILITIES ON SITE PRIOR TO COMMENCEMENT OF ANY WORK.
LANDSCAPE ARCHITECT ASSUMES NO LIABILITY FOR UTILITY DAMAGE.

IT IS THE CONTRACTOR'S RESPONSIBILITY TO VERIFY PLANT, SOD AND MULCH AMOUNTS FOR BIDDING PURPOSES. PLAN DRAWING TAKES PRECEDENCE OVER ANY QUANTITY SCHEDULES.

Parcel control number: 56434227030130120 & 56434226010010030

Applicant :

Name: Yashpal Kakkar
Address: 8895 N. Military Trail - Ste 101B, Palm Beach Gardens, FL 33410
Telephone: 561-627-7988

Landscape Architect:
Connie Roy-Fisher
413 24th Street
West Palm Beach
FL 33407
Tel (561) 747-3462
Fax (561) 747-0281
www.studio-sprout.com
LA 0000907
LCC 000213

STUDIO Sprout

SCALE	1"=30'-0"
DESIGNED BY	CRF
DRAWN BY	GF
CHECKED BY	CRF
CAD DWG.	
DATE	01.02.15
REVISIONS	08.03.15

WELLNESS RESORT
3100 NORTH OCEAN DRIVE
SINGER ISLAND, RIVIERA BEACH, FLORIDA

LANDSCAPE PLAN

Exhibit 'C', Elevations (N,S,E,W) Oct. 12, 2015 City Council Meeting

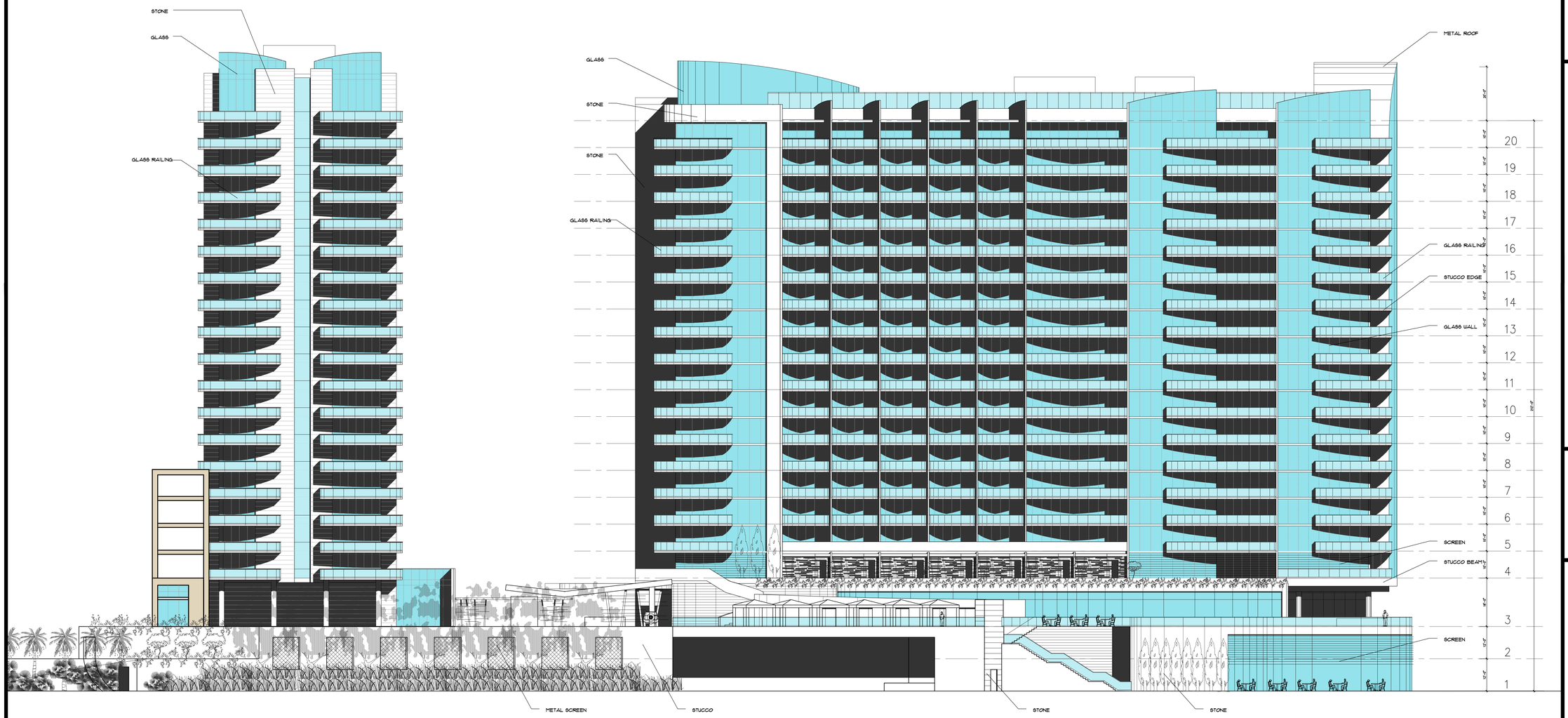

1 SOUTH ELEVATION

Scale: 1/16" = 1'-0'

10 20
20 0 40
GRAPHIC SCALE
(IN FEET)

S4 design llc
architecture
7995 SW 147 Street, Palmetto Bay, FL 33158
305 431 2996. E-mail: don@s4designllc.com

RESORT HOTEL
WELLNESS RESORT
3100 N. OCEAN DRIVE
SINGER ISLAND, RIVIERA BEACH, FLORIDA

SOUTH ELEVATION

SCALE : AS NOTED

DATE : JANUARY 5, 2015
PROJECT NUMBER :
DRAWN BY :
FILE NAME :
BACKGROUND DATE :
REVISION : DATE : BY :

A-301

Exhibit 'C', Elevations (N,S,E,W) Oct. 12, 2015 City Council Meeting

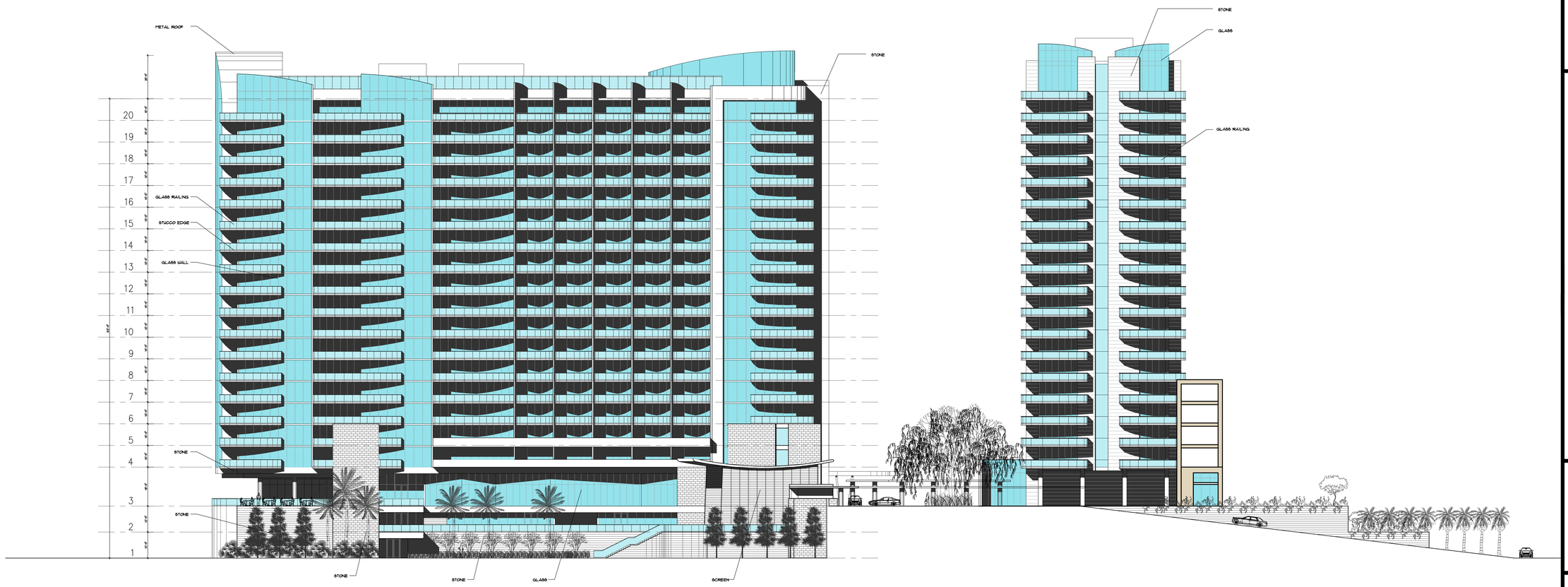

1 NORTH ELEVATION

Scale: 1:20

10 20
20 0 40
GRAPHIC SCALE
(IN FEET)

S4 design llc
architecture
7995 SW 147 Street, Palmetto Bay, FL 33158
305 431 2996. E-mail: don@s4designllc.com

RESORT HOTEL
WELLNESS RESORT
3100 N. OCEAN DRIVE
SINGER ISLAND, RIVIERA BEACH, FLORIDA

NORTH ELEVATION

SCALE : AS NOTED

DATE : JANUARY 5, 2015
PROJECT NUMBER :
DRAWN BY :
FILE NAME :
BACKGROUND DATE :
REVISION : DATE : BY :

A-302

Exhibit 'C', Elevations (N,S,E,W) Oct. 12, 2015 City Council Meeting

1 WEST ELEVATION

Scale: 1/16" =1'-0"

10 20
20 0 40
GRAPHIC SCALE
(IN FEET)

S4 design llc
architecture
7995 SW 147 Street, Palmetto Bay, FL 33158
305 431 2996. E-mail: don@s4designllc.com

RESORT HOTEL
WELLNESS RESORT
3100 N. OCEAN DRIVE
SINGER ISLAND, RIVIERA BEACH, FLORIDA

WEST
ELEVATION

SCALE : AS NOTED

DATE : JANUARY 5, 2015
PROJECT NUMBER :
DRAWN BY :
FILE NAME :
BACKGROUND DATE :
REVISION : DATE : BY :

A-303

Exhibit 'C', Elevations (N,S,E,W) Oct. 12, 2015 City Council Meeting

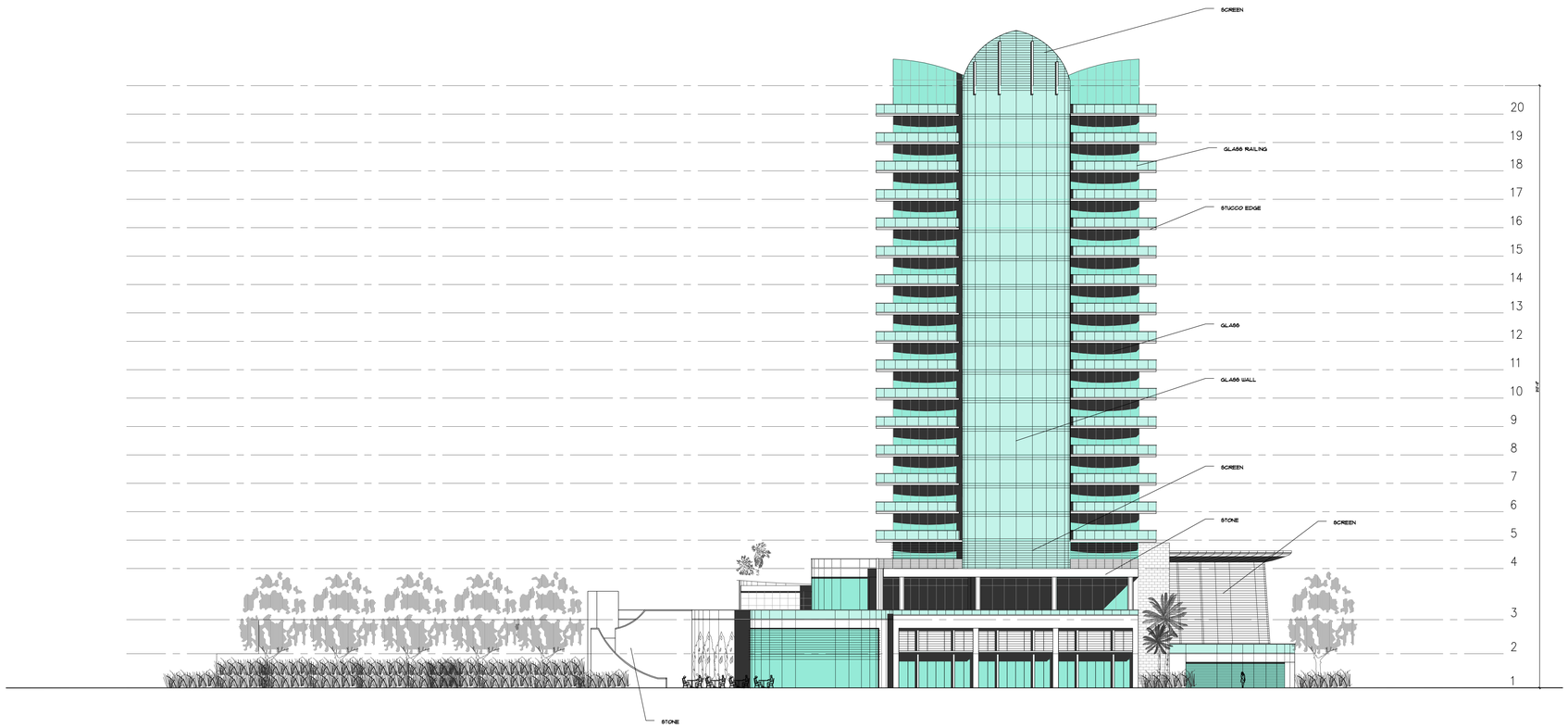

1 EAST ELEVATION

Scale: 1"= 20'

10 20
20 0 40
GRAPHIC SCALE
(IN FEET)

S4 design llc
architecture
7995 SW 147 Street, Palmetto Bay, FL 33158
305 431 2996. E-mail: don@s4designllc.com

RESORT HOTEL
WELLNESS RESORT
3100 N. OCEAN DRIVE
SINGER ISLAND, RIVIERA BEACH, FLORIDA

EAST
ELEVATION

SCALE : AS NOTED

DATE : JANUARY 5, 2015
PROJECT NUMBER :
DRAWN BY :
FILE NAME :
BACKGROUND DATE :
REVISION : DATE : BY :

A-304

CITY OF RIVIERA BEACH

DEPARTMENT OF COMMUNITY DEVELOPMENT
600 WEST BLUE HERON BLVD. RIVIERA BEACH, FLORIDA 33404
(561) 845-4060 FAX (561) 840-4038

April 3, 2017

Sent by Email: shama@creativechoice.net

Amrit Wellness Resort and Spa
Mr. Yashpal Kakkar, Owner's Representative
3100 North Ocean Drive
Riviera Beach, FL 33404

Re: 3100 North Ocean Drive, Amrit Wellness Resort and Spa, Proposed Site Plan Amendments

Dear Mr. Kakkar:

City staff has reviewed your correspondence dated March 13, 2017 (revised on March 16th and March 17th) and in conjunction with the executive office, believes that the requested site plan amendments should be brought before the public prior to issuance of any Site Plan Amendment or City building permits. This item will be placed on the April 19th 2017 City Council agenda for discussion and deliberation. If your team wishes to proceed with the aforementioned site plan amendments, please provide a full and itemized description of ALL changes to the site, new renderings in color, updated cost estimate and economic impact statement, and an updated landscape plan so that we may arrange for an agenda item to be heard at a future City Council Meeting. Please note that the foundation permit requested cannot be issued until the plans submitted match the approved site plan. The soonest this project can get on the City Council agenda is May 3rd and this assumes your team is prepared to provide the documents requested above.

In addition, please find a copy of my comments in reference to the associated plat.

Please feel free to contact me for additional information.

Sincerely,

Terrence Bailey, P.E.
Director of Community Development

C: Jonathan Evans, City Manager
Jeff Gagnon, Assistant Director of Community Development
Ladi March, Building Official

Enclosure

CITY OF RIVIERA BEACH • P. O. Drawer 10682 • RIVIERA BEACH, FLORIDA 33419
DEPARTMENT OF PUBLIC WORKS INTER-DEPARTMENTAL COMMUNICATION
Tel. (561) 845-4080 **Fax (561) 840-4845**

TO: Jeff Gagnon, Assistant Director
FROM: Terrence N. Bailey, PE
DATE: 4/3/17
RE: Amrit Ocean Resort Plat Review

==========

Engineering Division has reviewed the submittal for the above referenced plat:

1) Please provide a copy of the ALTA survey.
2) Please provide an updated site plan showing the location of the proposed property lines. Proposed property lines should not cut through buildings, structured parking or any other significant construction elements on the parcel.
3) Tract 1 in the northeast portion of the property does not have legal access from a public right of way.
4) Resolution 143-15 stipulates in Section 2(9) states: "A unity of title for parcels known by parcel control number 56-43-42-26-01-001-0030, and 56-43-42-27-03-013-0120 shall be completed and provided to the City prior to issuance of a City Building Permit." The City accepted the plat to provide comments, but prior to building permit issuance this stipulation for unit of Title must be addressed.
5) Please add Terrence N. Bailey, PE and my PE number 60706 inside the circle under the City Engineer's circle on the plat cover.

Terrence N. Bailey, P.E.
City Engineer

April 4, 2017

Mr. Terrence N. Bailey, LEED AP, P.E.
Director of Community Development
City of Riviera Beach
600 W. Blue Heron Boulevard
Riviera Beach, FL 33404

RE: 3100 N. Ocean Drive, Amrit Wellness Resort and Spa – Site Plan Review

Dear Mr. Bailey:

I am in receipt of your letter dated April 3, 2017. Thank you for the status update regarding the permitting process. In an effort to keep the permitting process moving forward, please find attached all of the information requested in the above-mentioned letter.

The following are attached hereto:

1. Description of all changes to the site - provided per March 17, 2017 letter
2. New renderings in color
3. Cost estimate
4. Economic impact study – provided August 27, 2015
5. Landscape plans - provided January 30, 2017 with the building permit application (4 full sized copies included with this letter – 3 pages of Landscape Tree Plan enclosed here for reference)

Our Design Team has maintained the approved site plan and developed it further, as allowed per City of Riviera Beach Resolution 143-15, Condition #6. Condition #6 of Resolution 143-15 specifically states: *"City Council authorizes City staff to approve future amendments to this site plan administratively so long as the site plan does not deviate greater than five percent (5%) from the originally approved submittal."*

It should be noted that none of the minor changes made exceed the five percent (5%) deviation allowed by the City of Riviera Beach Resolution 143-15, condition #6. The allowable modifications are primarily due to fire and life safety requirements, as delineated in our March 17th correspondence.

It is not uncommon for the site plans to be slightly modified, after being approved, based in large part from comments and input from staff during the permitting process. The above-mentioned Resolution anticipated that there would be some changes, and gave staff the authority to approve the changes without going back to the City Council as long as the changes did not deviate greater than five percent (5%) from the originally approved submittal. The changes in question do not exceed the allowed five percent (5%) deviation.

As you know, in November 2016, at Mr. Gagnon's request, we had provided a comparison of the current and approved site plans, highlighting the footprint of each, and noting that there is no deviation from the approved site plan. Upon your request on March 3, 2017, we evaluated further and confirmed that all major elements were the same, including Entry Driveway, Circular Drop-off, Building Locations, and Pool Deck. We explained that architectural improvements can be seen in the ramp to the garage and the shape of the pools. Overall however, the footprint is as it was approved. In reply to Mr. Gagnon's memo dated March 10th, we submitted on

March 13th a detailed response to all items requested. Thank you and staff for your partnership in identifying the allowable modifications, as provided in our final correspondence dated March 17th.

In addition to the items addressed in our March 17th letter, if there are any additional items of concern in the Building Permit Site Plan, we would like to discuss and resolve promptly. We would like to respectfully request that should the site plan in question go back to the City Council, which is not required, please place on the agenda as an action item. Resolving any open items in advance will allow that we and staff present our views in harmony. This would facilitate a decision on April 19, 2017.

If clarification is needed, we are available to discuss at your earliest convenience. We would greatly appreciate your timely response by Friday, April 7th.

We appreciate that City staff is looking to see this project come to fruition. Please let us know how we can assist to best present to the City Council on April 19, 2017. Thank you again for your support.

Sincerely,

Yashpal Kakkar | Owner's Representative

cc: Jonathan Evans, City Manager
Danny Jones, Assistant City Manager
Andrew Degraffenreidt, City Attorney
Ladi March, Building Official
Jeff Gagnon, Assistant Director of Community Development

Attachments:

1. City of Riviera Beach Resolution 143-15
2. Description of all changes to the site - provided per March 17, 2017 letter
3. New renderings in color
4. Cost estimate
5. Economic impact study – provided August 27, 2015
6. Landscape plans - provided January 30, 2017 with the building permit application (4 full sized copies resubmitted with this letter – 3 pages of Landscape Tree Plan enclosed here for reference)

March 13, 2017
Revised: March 16, 2017
Revised: March 17, 2017

Mr. Terrence N. Bailey, LEED AP, P.E.
Director of Community Development
City of Riviera Beach
600 W. Blue Heron Boulevard
Riviera Beach, FL 33404

RE: 3100 N. Ocean Drive, Amrit Wellness Resort and Spa - City Permit #16-2798 & #17-0211

Dear Mr. Bailey:

Thank you for clarifying the issues that we needed to address. Our design team has maintained the original site plan and developed it further, as allowed per Resolution No. 143-15.

Please find the requested response to each point in the same sequence as Mr. Gagnon's Memo dated March 10, 2017 in the revised letter below:

1. With respect to the size, shape, and footprint of the buildings, please see attached site plan (Attachment 1), and note that the West Tower dimensions are 193'-8" x 75', compared to 193' x 73'-2"; East Tower Dimensions are 257'-11" x 89', compared to 267'-4" x 86'-8". The height of both towers is 200', allowing for twenty feet additional height for mechanical facilities, ornamental towers and antennas.

2. The Total Unit count is 353 units, compared to 359 units. There are 153 hotel rooms, compared to 150 hotel rooms, and 198 hotel suites, compared to 209 hotel suites.

3. Total square footage dedicated for spa use is 29,570 square feet and for restaurant and bar uses is 9,975 square feet.

4. The ratio of pervious and impervious surface area has been maintained.

5. Regarding architectural elevations, both building footprints are per the dimensions mentioned in point #1, and the curvatures of the balconies have been maintained in both towers. Please see West Elevation attached (Attachment 2). To accommodate the necessary fire truck radius and clearance, per our discussions with Riviera Beach Fire Rescue, the west face of the East Tower was pushed back, while maintaining the curves.

6. The building footprint is 8'-6" inside of the 1979 CCCL.

7. Based on the unit mix of 153 hotel rooms and 198 hotel suites, 470 parking spaces are required. 586 parking spaces are provided, including service parking areas. Under the MEAHOP provisions, a reduction of up to 20% of the required spaces is allowed; if fully applied, that would reduce the required parking spaces from 470 to 376.

8. Regarding the garage entrance configuration, note that the adjustment was a life safety necessity to meet fire egress requirements for the safety of onsite traffic flow and pedestrian egress.

9. No guardhouse has been added at the front entrance.

10. While maintaining the shape and location of the drive aisle and drop-off area, we have accommodated the required fire staging locations, which were further improved based on discussions with Riviera Beach Fire Rescue.

11. To accommodate the fire staging areas at the drop-off drive, the pools were required to shift and split. However, the overall size and location of swimming pools at the Level 3 deck have been maintained.

12. The 5-foot access easement has been maintained within the 10' landscape buffer on the south property line and will be identified as required.

Regarding the sea turtle lighting plan, please see email approval (Attachment 2).

If clarification is needed, we are available to meet at your earliest convenience. We would greatly appreciate your timely response by Friday, March 17th. I look forward to hearing from you soon.

Sincerely,

Yashpal Kakkar | Owner's Representative

cc: Danny Jones, Deputy City Manager
Andrew Degraffenreidt, City Attorney
Ladi March, Building Official
Jeff Gagnon, Assistant Director of Community Development

Attachments:
Attachment 1 - Site Plan for Construction
Attachment 2 – West Elevation
Attachment 3 – Approval email for Sea Turtle Lighting Plan

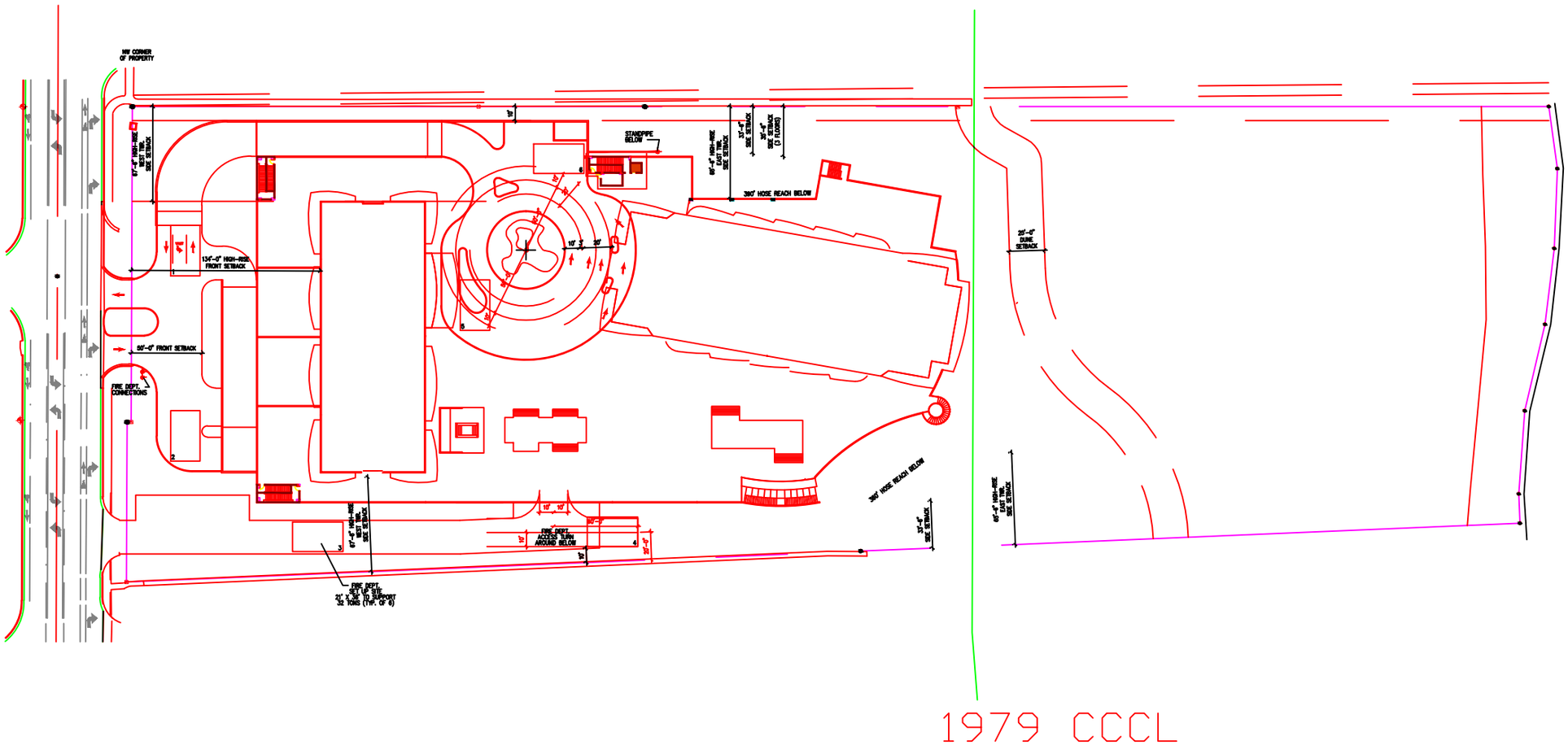

1979 CCCL

NOTE: BUILDING FOOTPRINT IS 8'6" INSIDE OF 1979 CCCL

REMARKS

AMRIT WELLNESS RESORT AND SPA
RIVIERA BEACH, FLORIDA

DATE :
SHEET NO

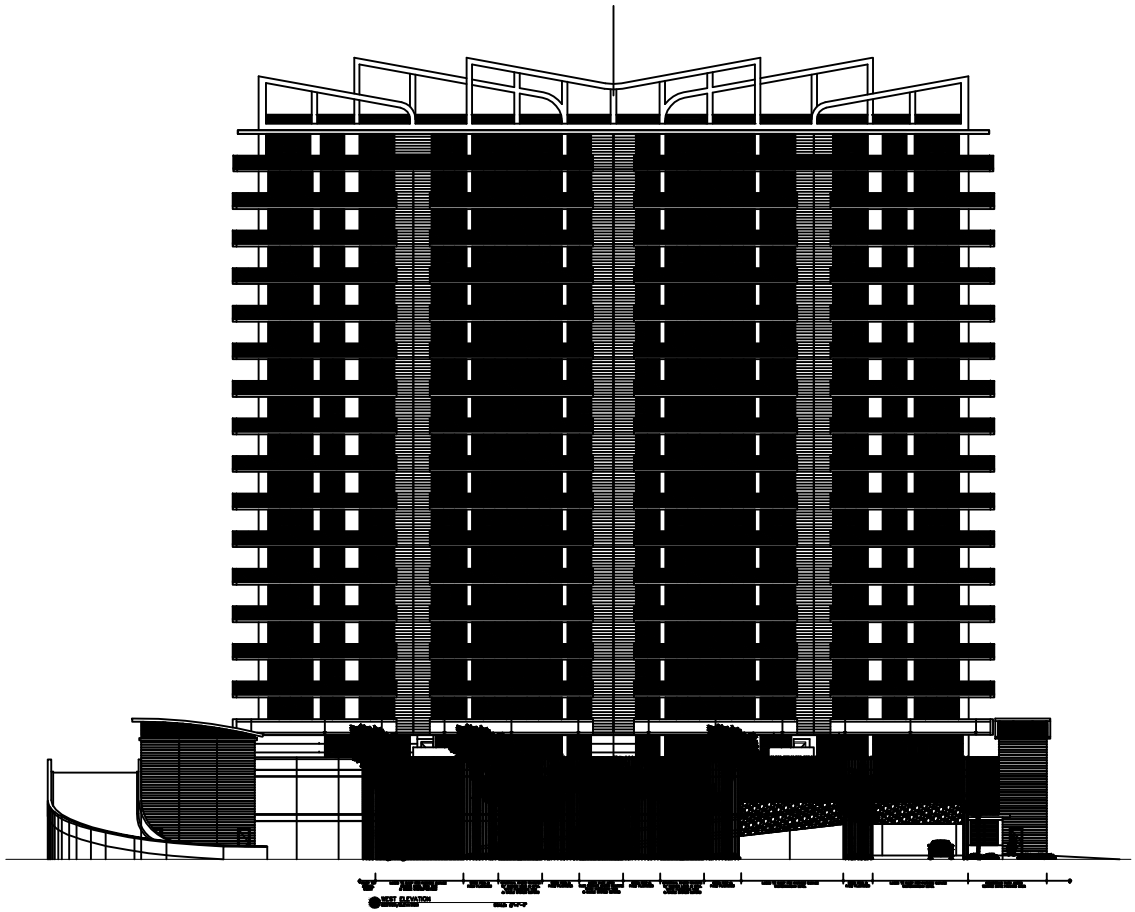
NEXT ELEVATION

From: Kelly Martin [mailto:KMartin@pbcgov.org]
Sent: Tuesday, March 7, 2017 12:40 PM
To: John Bourassa <john@creativechoice.net>
Cc: James Brown <jim@wrspalmbeach.com>; Mann, Douglas <Douglas.Mann@cbi.com>; Matt Mitchell <MMitchell@pbcgov.org>
Subject: RE: Amrit Review

I have completed review of the plans. It is approved upon the following conditions.

1. Fixture 1 (Phillips Pole Light) – If these lights are visible from the beach, a shield will need to be designed for the eastern side of the fixture to direct light downward to the pathway and away from the beach.
2. Fixture 7 (BK Lighting Pathway Light) – There is a very large number of fixtures proposed. If the vegetation and building are situated in such a way that they are not visible from the beach then this will be acceptable. If these fixtures are directly visible from the beach upon completion of construction, we will have to ask that they be reduced in numbers or an alternative fixture be used.
3. Fixture 9 (BK Lighting Step Light) – This particular fixture has been known to cause a considerable amount of wall wash. If they are situated in such a way that the building itself blocks their view from the beach then that is fine. The stairwell from the ground floor to the third floor may be problematic.
4. There is a chance that there will be a large amount of wall wash or indirect illumination on the building walls. If it becomes problematic we will need to address the issue through shields and redirection of fixtures.

We will approve the application provided that the above matters are understood. We are not asking for changes currently but if we should find that any of the issues listed above become a problem after construction, we will need to address them.

I need to print a clean copy of all pages of the application to sign/seal and it will need to be routed internally for multiple signatures. We will mail a hard copy of the approval to you once complete. I will scan and email a copy to you as well.

Kelly Martin
Environmental Analyst
Palm Beach County
Dept. Environmental Resources Management
2300 North Jog Road, 4th Floor
West Palm Beach, FL 33411-2743
561-233-2509 office
KMartin@pbcgov.org

Cost Estimate – Q1 2017

Amrit Wellness Resort & Spa – 3100 N. Ocean Drive

	Item	Target Budget
1	Site Work & Utilites	$ 3,023,000.00
2	Concrete & Masonry	$ 29,200,000.00
3	Glass & Glazing	$ 8,100,000.00
4	Metals & Steel	$ 1,900,000.00
5	Plumbing	$ 4,200,000.00
6	Mechanical / HVAC	$ 6,900,000.00
7	Electrical	$ 5,800,000.00
8	Wood & Plastics	$ 512,000.00
9	Thermal & Moisture	$ 1,200,000.00
10	Door (Interior & Exterior)	$ 2,000,000.00
11	Finishes	$ 9,180,000.00
12	Specialties	$ 1,540,000.00
13	Equipment	$ 2,800,000.00
14	Special Construction	$ 1,450,000.00
15	Conveying Systems	$ 3,300,000.00
16	Roof	$ 595,000.00
17	Carpentry	$ 2,100,000.00
18	Fire Sprinklers	$ 1,200,000.00
	Total	$ 85,000,000.00

ECONOMIC IMPACT

- ✓ Direct revenue to City of Riviera Beach = $ 38,139,095
- ✓ Positive impact on the local area during Development Phase = $161,164,646
- ✓ Positive impact on local area during ongoing resort operations = $43,380,000
- ✓ Substantial job creation during development phase = 3035 new jobs
- ✓ Subsequent Permanent and Resort direct jobs = 659 new jobs
- ✓ Economic impact calculation done by SDI, Inc. and Dr. Michael Evans

PAGE 1: City Revenue for CCH Singer Island Resort

Assessed Value	TOTAL	$ 375,000,000	PHASE 1 RESORT SUITES	102
DATE: 04-26-2015	PHASE1 RESORT	$ 125,000,000	PHASE 1 RESORT ROOMS	150
NOTE: CONTINUAL FEE	PHASE1 HOTEL/SPA	$ 75,000,000	Restaurant, Bar & SPA	25
	PHASE 2 RESORT	$ 175,000,000	PHASE 2 RESORT SUITES	107

All calculations are subordinate to the final development approval of the project.

Department	Contact	Revenue Source	Source Document		
1- City of Riviera Beach	SDI Inc.	2015 City Millage	0.0086064	$ 3,227,400	
		SUBTRACT 2014 City Ad Valorem	Current Tax	$ 53,134	
		TOTAL ADDITIONAL CITY TAX REVENUE		$ 3,174,266	$ 3,174,266
		CITY MUNICIPAL IMPACT FEES Phase 1 & 2 HOTEL/RESORT			$ 438,233
2-Building Department	Jim Brown/SDI	Building Permit Fee			$ 950,350
		Plan Review Fee (Electrical, Mechanical, Plumbing & Structural)			$ 2,500
		Fire Rescue Plan Review			$ 276,000
		Training Surcharge Fee			$ 14,588
3-Utilities/Engineering Department	Jim Brown/SDI	Engineering Plan Review Fee			$ 230,000
		Utility Connections	Utility Dept RVBeach		$ 1,310,501
FIRST YEAR & DEVELOPMENT PHASE CITY REVENUE				**$**	**6,396,438**
1- City of Riviera Beach	SDI Inc.	10 YR at 0% YEARLY GROWTH	$3,174,266 x 10 YEARS	$	31,742,656.40
TOTAL ADDITIONAL REVENUE FOR CITY OF RIVIERA BEACH				**$**	**38,139,095**

REQUESTED FUNDS FROM CITY $0.00

COPYRIGHT PENDING

DEVELOPMENT PHASE

Employment & Economic Impact of Singer Island Resort

DATE: 4-26-15

Project Description: The project is a one million square foot mixed use resort-residences project. Spread across two 20 story buildings, will have 150 hotel rooms and 209 resort residences for sale. The resort will also feature a wellness spa, restaurants, retail space and executive meeting areas. The constriction will last for about 30 months. The total of hard and soft costs is approx. $215 Million

Strategic Development Initiatives

The Impact on the Local Area Economy during *Development Phase*	
Area Economic Impact for One time Development Costs **PHASE I**	***$92,983,000***
Area Economic Impact for One time Development Costs **PHASE II**	***$68,181,646***
TEMPORARY DEVELOPMENT PHASE NEW JOBS CREATED	
TOTAL PHASE I JOBS ACROSS ALL INDUSTRIES	**1484**
TOTAL PHASE II JOBS ACROSS ALL INDUSTRIES	**1551**

3035 TOTAL DEVELOPMENT PHASE NEW JOBS

PERMANENT JOBS CREATED

Employment & Economic Impact of Singer Island Resort

DATE: 4-26-15

Project Description: The project is a one million square foot mixed use resort-residences project. Spread across two 20 story buildings, will have 150 hotel rooms and 209 resort residences for sale. The resort will also feature a wellness spa, restaurants, retail space and executive meeting areas. The constriction will last for about 30 months. The total of hard and soft costs is approx. $215 Million

Strategic Development Initiatives

PERMANENT NEW JOBS CREATED

**TOTAL PERMAENT JOBS ACROSS ALL INDUSTRIES	659
**TOTAL RESORT DIRECT JOBS - Subset of permanent	442
*Area Economic Impact for First year & Ongoing Resort Operations	$43,380,000

TOTAL 659 NEW JOBS

Continual Economic Expansion and Investment into the area economy

Estimated Annual Ongoing Economic Impact over $25,000,000

*Direct Job Payroll *Indirect Job Payroll *New Residences *Tourism

COPYRIGHT PENDING

*Area = tri-county of Dade, Broward, Palm Beach

**Localized Jobs multipliers are just Palm Beach & Martin

PROJECT PATH: Y:\PROJECTS\16.008 - SINGER ISLAND WELLNESS RESORT\DRAWINGS\CADENCEDOC\16-008_LANDSCAPE TREE PLAN.DWG

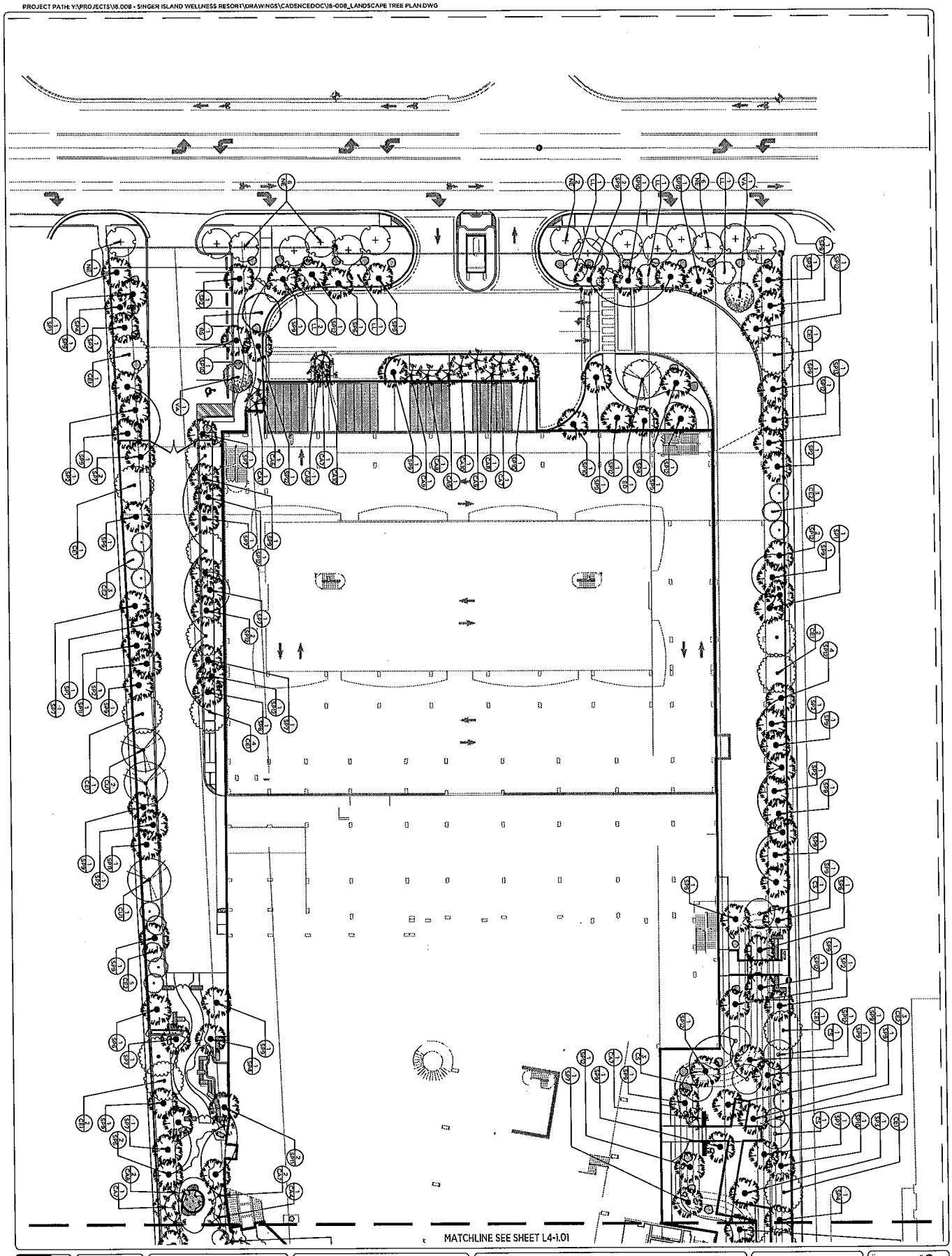

LANDSCAPE TREE PLAN - LEVEL 1 WEST

L4-1.00

KEY MAP

NTS

PERMIT DRAWINGS

PROJECT NO: 16.008

DRAWN BY: Cadence

CHK'D BY:

DATE: JANUARY 30, 2017

SCALE: 1" = 20'-0"

NORTH

0 10' 20' 40'

REVISIONS & MILESTONES

NO.	DESCRIPTION	DATE

Project:

AMRIT WELLNESS RESORT AND SPA

SINGER ISLAND
RIVIERA BEACH, FLORIDA 33404

cadence

PROJECT PATH: Y:\PROJECTS\16.008 - SINGER ISLAND WELLNESS RESORT\DRAWINGS\CADENCEDOC\16-008_LANDSCAPE TREE PLAN.DWG

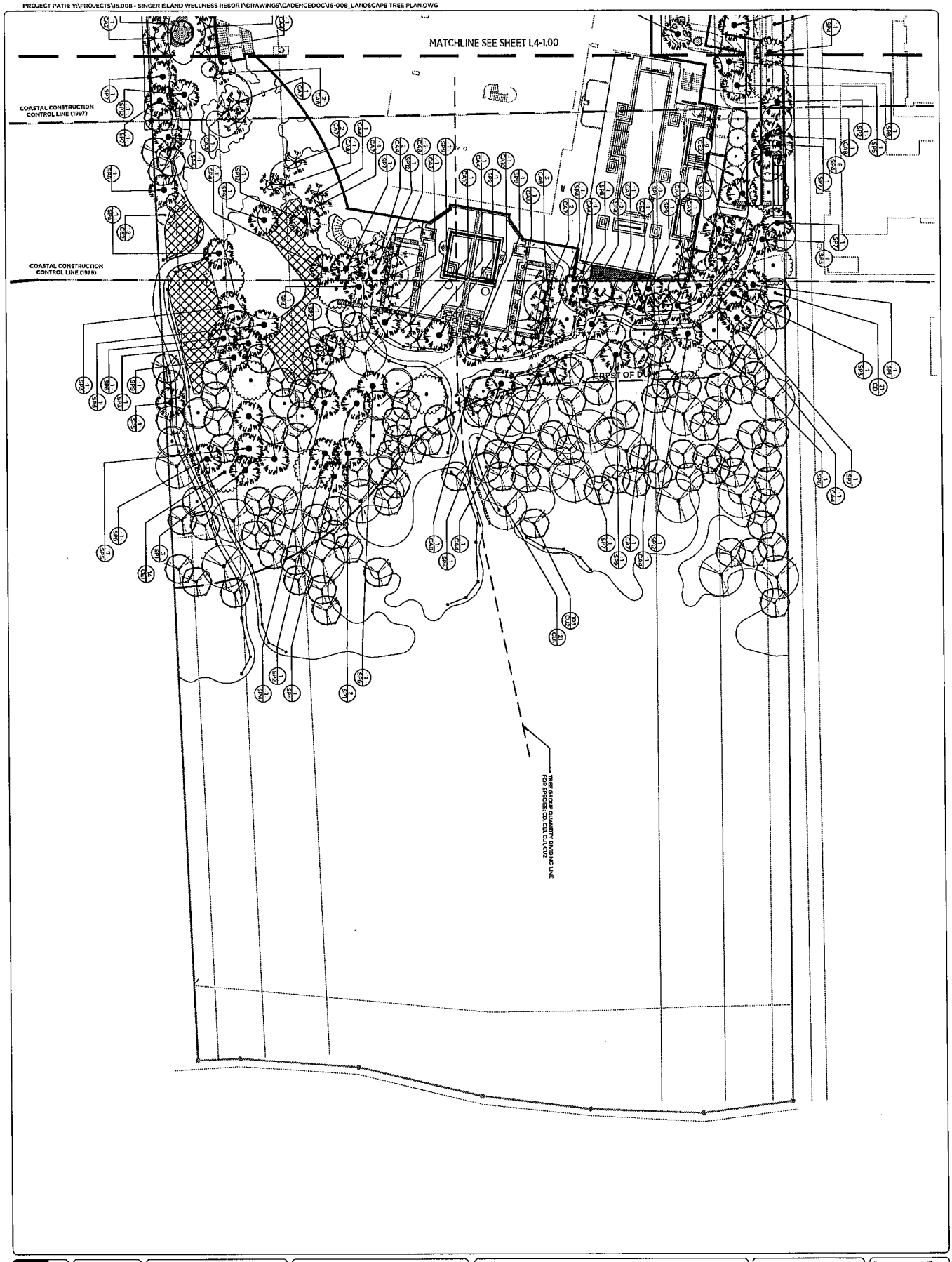

L4-1.01

LANDSCAPE TREE PLAN - LEVEL 1

KEY MAP

NTS

PERMIT DRAWINGS

PROJECT NO: 16.008

DRAWN BY: Cadence

CHK'D BY:

DATE: JANUARY 30, 2017

SCALE: 1" = 20'-0"

NORTH

0 10' 20' 40'

REVISIONS & MILESTONES

NO.	DESCRIPTION	DATE

Project:

AMRIT WELLNESS RESORT AND SPA

SINGER ISLAND
RIVIERA BEACH, FLORIDA 33404

cadence

PROJECT PATH: Y:\PROJECTS\16.008 - SINGER ISLAND WELLNESS RESORT\DRAWINGS\CADENCEDOC\16-008_LANDSCAPE TREE PLAN.DWG

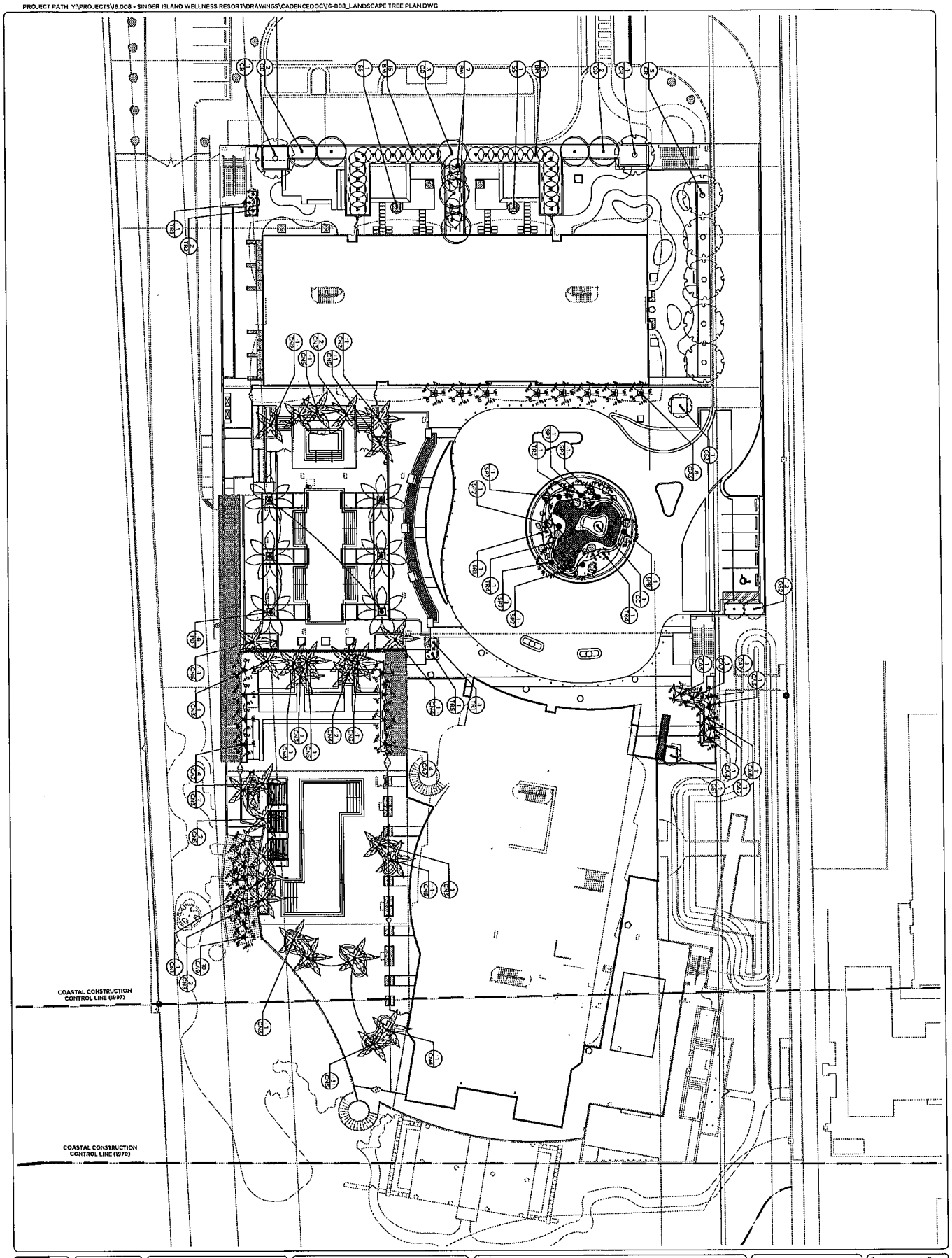

LANDSCAPE TREE PLAN - LEVEL 3

L4-1.02

KEY MAP

NTS

PERMIT DRAWINGS

PROJECT NO: 16.008

DRAWN BY: Cadence

CHK'D BY:

DATE: JANUARY 30, 2017

SCALE: 1" = 20'-0"

NORTH

0 10' 20' 40'

REVISIONS & MILESTONES

NO.	DESCRIPTION	DATE

Project:

AMRIT WELLNESS RESORT AND SPA

SINGER ISLAND

RIVIERA BEACH, FLORIDA 33404

cadence

Exhibit 'A', Site Plan. Oct. 12, 2015 City Council Meeting

Approved

SITE PLAN INFORMATION

PROPOSED LAND USAGE	SFT	ACRES
TOTAL SITE AREA	309,556	7.106

NUMBER OF UNITS

EASTERN TOWER	150 HOTEL ROOMS
	102 HOTEL SUITES
WESTERN TOWER	107 HOTEL SUITES
TOTAL	359 UNITS

ARCHITECTURE

EASTERN TOWER

BUILDING LENGTH	267'-4"
BUILDING WIDTH	86'-8"

WESTERN TOWER

BUILDING LENGTH	193'=0"
BUILDING WIDTH	73'-2"

PARKING DATA

GARAGE LEVEL 1 PARKING SPACES/ MECHANICAL DBL STACKED	200
GARAGE LEVEL 2 PARKING SPACES/MECHANICAL DBL STACKED	198
GARAGE LEVEL 3 PARKING SPACES/MECHANICAL DBL STACKED	198
SURFACE PARKING	11
TOTAL PARKING SPACES REQUIRED	387
(20% MEAHOP Discount applied)	
TOTAL PARKING SPACES PROVIDED	607
TOTAL H.C SPACES PROVIDED	20

AREA CALCULATIONS

EASTERN TOWER AREA

LEVEL 1 ENCLOSED AREA	46,425
LEVEL 2 ENCLOSED AREA	22,205
LEVEL 3 ENCLOSED AREA	24,108
LEVEL 4 ENCLOSED AREA	20,730
LEVEL 5 ENCLOSED AREA	20,176
LEVEL 6-20 ENCLOSED AREA	258,672
EASTERN TOWER TOTAL	392,136

WESTERN TOWER AREA

LEVEL 3 ENCLOSED AREA	16,853
LEVEL 4-20 ENCLOSED AREA	208,920
WESTERN TOWER TOTAL	225,773
TOTAL	617,909

GARAGE LEVEL 1	66,771
GARAGE LEVEL 2	66,627
GARAGE LEVEL 3	56,360

FAR

FLOOR AREA RATIO	2.0

LAND CALCULATIONS

	SFT	ACRES
PERVIOUS AREA	194,616	4.466
IMPERVIOUS AREA	114,940	2.64

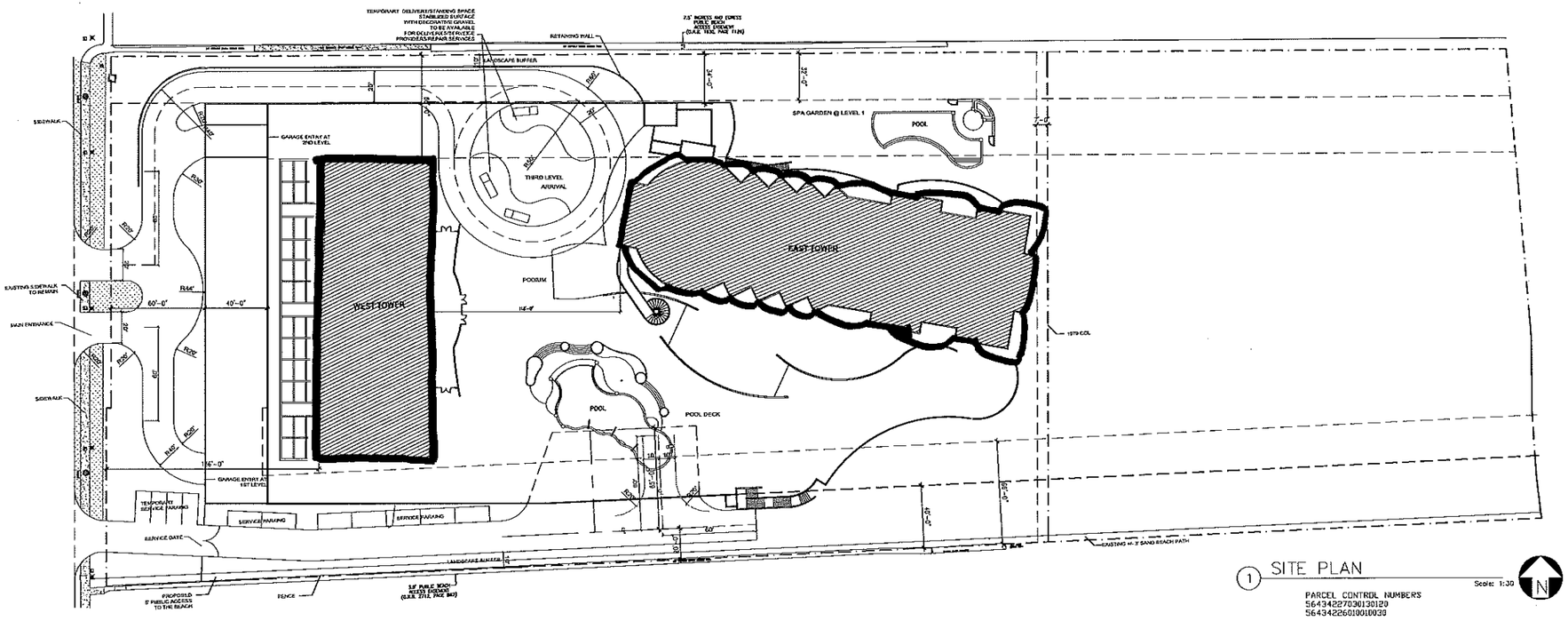

1 SITE PLAN

Scale: 1:30

PARCEL CONTROL NUMBERS
56434227030130120
56434226010010030

15 30
30 0 60
GRAPHIC SCALE
(IN FEET)

S4 design llc
architecture
7955 SW 147 Street, Palmetto Bay, FL 33158
305 431 2996. E-mail: dan@s4designllc.com

RESORT HOTEL
WELLNESS RESORT
3100 N. OCEAN DRIVE
SINGER ISLAND, RIVIERA BEACH, FLORIDA

SITE PLAN

SCALE AS NOTED

DATE :	JANUARY 5, 2015
PROJECT NUMBER :	
DRAWN BY :	
FILE NAME :	
BACKGROUND DATE :	

REVISION :	DATE :	BY :
1 7' SETBACK	08/02/15	

A-101

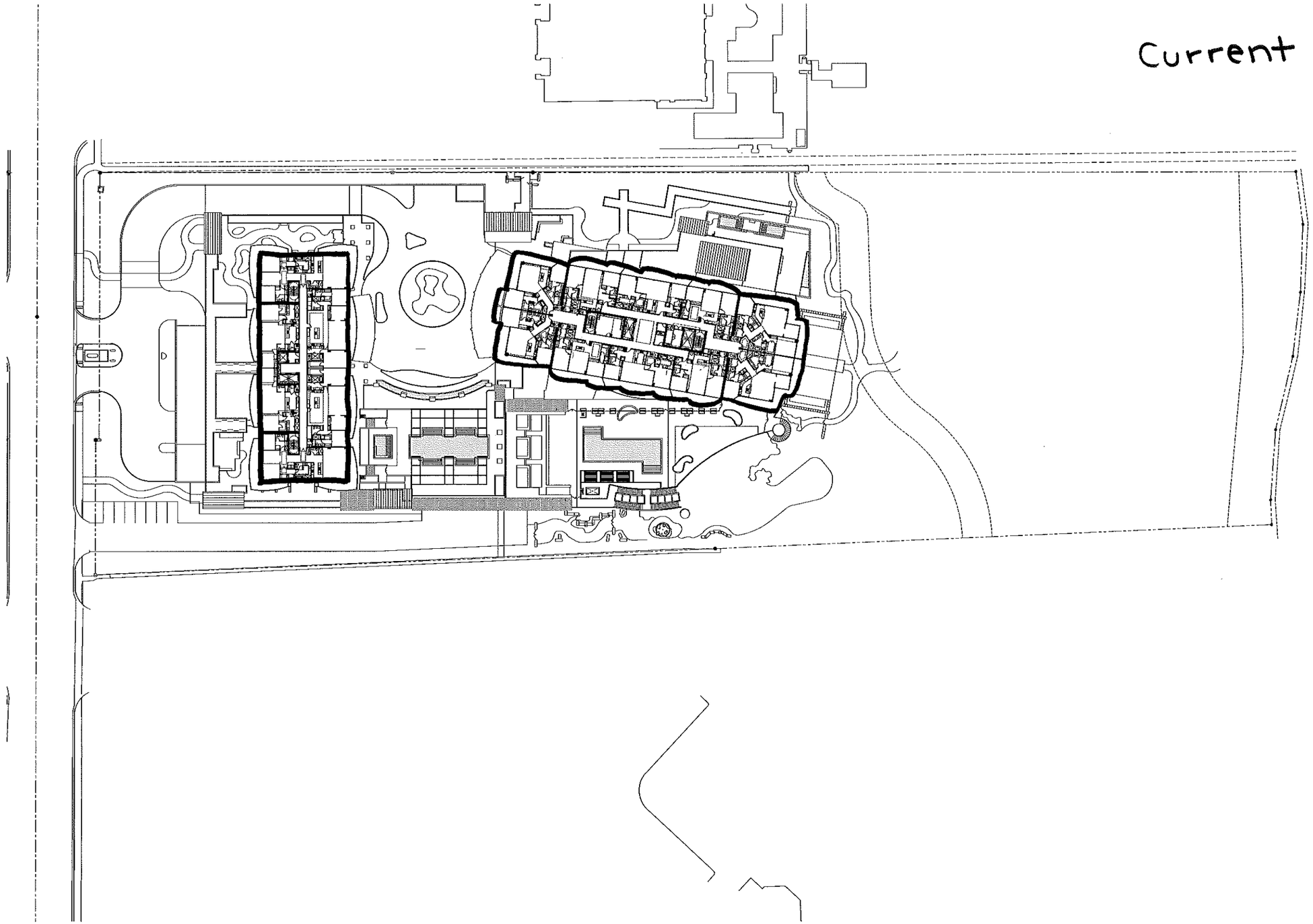

OVERALL SITE PLAN LEVEL 10
SCALE: 1" = 30'-0"

N

© S & E ARCHITECTS, INC.
ALL RIGHTS RESERVED

THE ARCHITECTURAL DESIGN AND DETAIL GRAPHICS FOR THIS PROJECT ARE THE LEGAL PROPERTY OF S & E ARCHITECTS, INC. THESE USE FOR REPRODUCTION, CONSTRUCTION, OR DISTRIBUTION IS PROHIBITED UNLESS AUTHORIZED IN WRITING BY THE ARCHITECT.

S & E ARCHITECTS, INC.
AA26002332
ROBERT J. SCHNECKENBERG
AR0015487

REVISIONS	DATE

50% CD PROGRESS SET
10-10-16
PERMIT ISSUE
-
BID SET
-
CONSTRUCTION SET
-

AMRIT WELLNESS RESORT AND SPA
RIVIERA BEACH, FLORIDA

ARCHITECTS, INC.
2000 South Dixie Highway #203 | Miami, FL 33133
Office: 305-441-2226

SHEET TITLE
OVERALL SITE PLAN
LEVEL 10

DATE 10-10-16
SCALE
JOB NO. 2015-24
SHEET
A1.XX
OF SHEETS

CITY OF RIVIERA BEACH • P. O. BOX 10682 • RIVIERA BEACH, FLORIDA 33419
CITY ATTORNEY'S OFFICE INTER-DEPARTMENTAL COMMUNICATION

MEMORANDUM

TO: TERRENCE BAILEY, DIRECTOR OF COMMUNITY DEVELOPMENT
DEANDRE SPRADLEY, PRINCIPAL PLANNER
LADI MARCH, BUILDING OFFICIAL

FROM: ANDREW DEGRAFFENREIDT, CITY ATTORNEY

CC: JONATHAN E. EVANS, CITY MANAGER

DATE: MARCH 27, 2017

RE: WELLNESS RESORT: VESTING OF SITE PLAN AND EXTENSION OF DEVELOPMENT ORDER PURSUANT TO SECTION 252.363, FLORIDA STATUTES

Please find attached a letter from James Crowley, Esq., regarding the above referenced. Please advise what effect if any does the subject extension have with respect to this project.

Thank you for your attention to this matter.

Attachment

AD:syj

GUNSTER
FLORIDA'S LAW FIRM FOR BUSINESS

Our File Number: pending
Writer's E-Mail Address: jcrowley@gunster.com

RECEIVED
MAR 15 2017
CITY ATTORNEY'S OFFICE

March 14, 2017

VIA FEDEX

Andrew DeGraffenreidt, Esq.
City Attorney
600 W. Blue Heron Blvd.
Riviera Beach, FL 33404

Re: Wellness Resort: Vesting of Site Plan and Extension of Development Order pursuant to Section 252.363, Florida Statutes

Dear Andrew:

Gunster represents WRS Development, LLC, in connection with the development of property located at 3100 North Ocean Drive, Riviera Beach, FL (the "Property"). The City Council, at its October 12, 2015 public meeting, approved Resolution 143-15 (the "Resolution"), which granted site plan approval for two 20-story high rise buildings consisting of 150 resort hotel rooms, 209 resort hotel suites, a 30,000 square foot spa, and 10,000 square feet of accessory space to be constructed at the Property. An executed copy of the Resolution is enclosed herewith as Attachment "1." The Resolution was "rendered" for purposes of Florida law, and thus became effective, on November 19, 2015, when it was executed by the City Clerk.

Section 252.363(1)(a), Florida Statutes, provides that "[t]he declaration of a state of emergency by the Governor tolls the period remaining to exercise the rights under a permit or other authorization for the duration of the emergency declaration. Further, the emergency declaration extends the period remaining to exercise the rights under a permit or other authorization for 6 months in addition to the tolled period." Pursuant to Section 252.363(1)(a)(1), this provision specifically applies to "[t]he expiration of a development order issued by a local government." For the tolling period to apply to a local government development order, Section 252.363(2) provides that "[w]ithin 90 days after the termination of the emergency declaration, the holder of the permit or other authorization shall notify the issuing authority of the intent to exercise the tolling and extension granted under paragraph (a). The notice must be in writing and identify the specific permit or other authorization qualifying for extension."

On June 23, 2016, Governor Rick Scott issued executive order 16-149 in response to the public health emergency posed by the Zika virus. That executive order, which is enclosed herewith as Attachment "2," declared a state of emergency in Palm Beach County, which in turn triggered the protections and time extensions set forth in Section 252.363, Florida Statutes, for projects located in Palm Beach County. Executive order 16-149, which had a 60-day duration under Florida law, was extended twice by Governor Scott: the first 60-day extension occurred on August 19 through the issuance of executive order 16-193 (attached hereto as Attachment "3"), and the second 60-day extension occurred on October 19, 2016 through the issuance of executive order 16-233 (enclosed herewith as Attachment "4").

Pursuant to Section 252.363(2), Florida Statutes, the holder of a permit or other authorization (here, WRS Development, LLC) must notify the issuing authority in writing within 90 days after the termination of the emergency declaration, which in this case occurred on December 20, 2016 (June 23 plus 180 days). Adding 90 days to the December 20, 2016 termination, the extensions of time triggered by the executive orders discussed above apply to all development orders as long as the issuing authority is notified by March 20, 2016.

It is the intent of this letter to notify the City of Riviera Beach that WRS Development, LLC, intends to utilize all tolling and extensions of time set forth in Section 252.363, Florida Statutes, as it pertains to Resolution 143-15, including, but not limited to, the time required for submittal of a complete building permit (assuming, in an abundance of caution, that the City subsequently takes the position that WRS Development's previous building permit submittal was not "complete")[1] and the time by which WRS Development, LLC must receive a certificate of occupancy from the City. Utilizing the tolling and 6 month extension of time under Section 252.363, all permit expiration dates under Resolution 143-15 are extended by operation of law for a period of 363 days. For your reference, I have attached the Palm Beach County Planning and Zoning department's explanation of the application of Section 252.363, Florida Statutes, to County development permits. That County document is attached as Attachment "5." Section 252.363 similarly applies to all permits issued by a local government such as the City of Riviera Beach.

[1] Pursuant to Section 2, Paragraph 3 of the Resolution, "Construction must be initiated within 18 months of the effective date of this resolution in accordance with Section 31-60(b) of the City Code of Ordinances. Demolition, site preparation or land clearing shall not be considered construction. Building permit application and associated plans and documents shall be submitted in its entirety and shall not be accepted by City staff in a partial or incomplete manner." WRS Development submitted a complete application for building permit on January 30, 2017. Therefore, the site plan which was approved by the Resolution is vested and the condition set forth in Section 2, Paragraph 3 have been met. WRS Development sent a letter to the City Manager on March 13, 2017 to verify that the conditions set forth in Section 2, Paragraph 3 of the Resolution have been met.

I would appreciate your acknowledgment that all development orders or other permit authorizations have been extended by 363 days in accordance with Florida law. I look forward to discussing this issue with you should you have any questions or concerns.

Very truly yours,

James M. Crowley, Esq.
Shareholder

JMC
Enclosures

Attachment "1"

CITY OF RIVIERA BEACH

600 WEST BLUE HERON BLVD. • RIVIERA BEACH, FLORIDA 33404 • (561) 845-4090 • Fax (561) 840-3438

OFFICE OF THE CITY CLERK
Claudene L. Anthony, CMC
City Clerk

STATE OF FLORIDA	)	
	)	
COUNTY OF PALM BEACH	)	**SS.**
	)	
CITY OF RIVIERA BEACH	)	

I, CLAUDENE L. ANTHONY, CERTIFIED MUNICIPAL CLERK, CITY CLERK OF THE CITY OF RIVIERA BEACH, PALM BEACH COUNTY, FLORIDA DO HEREBY CERTIFY THAT THIS IS A TRUE AND CORRECT COPY OF Resolution 143-15

AS SHOWN IN THE RECORDS OF THE CITY ON FILE IN THE OFFICE OF THE CITY CLERK.

IN WITNESS WHEREOF, I HAVE HEREUNTO SET MY HAND AND AFFIXED THE SEAL OF THE CITY OF RIVIERA BEACH, FLORIDA, DONE THIS 19th **DAY OF,** November, 2015.

(SEAL)

CLAUDENE L. ANTHONY, CMC
CITY CLERK

RESOLUTION NO. 143-15

A RESOLUTION OF THE CITY COUNCIL OF THE CITY OF RIVIERA BEACH, PALM BEACH COUNTY, FLORIDA, APPROVING AN APPLICATION FROM YASHPAL KAKKAR, AGENT FOR PROPERTY OWNER DINESH PANDYA, TRUSTEE, (SP-14-08) REQUESTING SITE PLAN APPROVAL TO DEVELOP 7.1 ACRES OF LAND AT 3100 NORTH OCEAN DRIVE, KNOWN BY PARCEL CONTROL NUMBER 56-43-42-26-01-001-0030, AND 56-43-42-27-03-013-0120 IN ORDER TO CONSTRUCT TWO (2) 20-STORY HIGH-RISE BUILDINGS, NAMED THE WELLNESS RESORT AND SPA, CONSISTING OF 150 RESORT HOTEL ROOMS AND 209 RESORT HOTEL SUITES, WESTWARD OF THE 1979 COASTAL CONSTRUCTION CONTROL LINE, LOCATED WITHIN THE RESORT HOTEL (RH) ZONING DISTRICT; AND PROVIDING AN EFFECTIVE DATE.

WHEREAS, 3100 North Ocean Drive has a Resort Hotel (RH) Zoning Designation, and consists of two parcels known by Parcel control number 56-43-42-26-01-001-0030 and 56-43-42-27-03-013-0120, which totals approximately 7.1 acres; and

WHEREAS, Section 31-57 of the City of Riviera Beach Code of Ordinances establishes requirements for site plan review by the City Council; and

WHEREAS, the owner of 3100 North Ocean Drive, Dinesh Pandya, Trustee, submitted a site plan application for the "Wellness Resort and Spa" on April 1, 2014 (City staff site plan number SP-14-08) proposing to develop two 20-story high-rise buildings, consisting of 150 resort hotel rooms and 209 resort hotel suites as well as a +/- 30,000 square foot spa and also +/- 10,000 square feet of restaurant and bar space; and

WHEREAS, in July of 2014, Ordinance 4047 was approved by City Council initiating a moratorium regarding potential amendments to development setbacks on the Atlantic Ocean coastline on Singer Island; and

WHEREAS, in May of 2015, Ordinance 4061 was approved by City Council adopting new coastal setback development regulations, amending the easternmost development setback line within the Resort Hotel (RH) Zoning District from the 1979 Coastal Construction Control Line to the 1997 Coastal Construction Control line, resulting in a greater development setback from the Atlantic Ocean coastline; and

WHEREAS, the Wellness Resort and Spa site plan application was submitted prior to the July 2014 moratorium and proposes construction of the easternmost 20-

story tower west of the 1979 Coastal Construction Control Line, and east of the 1997 Coastal Construction Control Line; and

WHEREAS, historically, in October of 2004, The City's Zoning Board of Adjustment reviewed a variance application for 3100 North Ocean Drive and granted three variances as provided below:

1. "The current regulation under Section 31-529 (8) limits the east to west length to 200 feet. The applicant is requesting a 170 foot east to west variance for the building, which would allow a 370 foot long building."
2. "The current regulation under Section 31-529 (7) limits the north south width to 120 feet. The applicant is requesting a 75 foot north to south width variance for the building, which would allow a 195 foot wide building."
3. "Section 31-527 defines a high-rise structure as any part of a structure three stories in height or more. The applicant is requesting a six story variance from the high-rise definition."; and

WHEREAS, the Zoning Board of Adjustment granted the three aforementioned variances with the following condition, "The applicant shall utilize the requested variances to develop the property substantially consistent with the elevation and site plan presented to the zoning board of adjustment."; and

WHEREAS, the historic elevation and site plan presented to the Zoning Board of Adjustment in 2004 proposed a 20-story tower to the eastern portion of the property and a 9-story structure to the west, which is known as the "Amrit" project; and

WHEREAS, the current Wellness Resort and Spa site plan application proposes modified building elevations, massing and site configuration than the Amrit site plan; and

WHEREAS, the Wellness Resort and Spa site plan application proposes to utilize a portion of variance number 1 (267 feet versus 370 feet, east to west building length) and variance number 2 (193 feet versus 195 feet, north to south building width), and does not propose to utilize variance number 3; and

WHEREAS, in accordance with City Resolution 236-04, the applicant held a public community meeting on Singer Island, at 3100 North Ocean Drive, on July 13, 2015; and

WHEREAS, on August 27, 2015, the Planning and Zoning Board, an advisory board to the City Council, reviewed the Wellness Resort and Spa site plan application and City staff report, which included the Site Plan, Landscape Plan, and building

elevations attached hereto as Exhibit "A", "B", and "C" and recommended approval with an affirmative vote of 6 to 1; and

WHEREAS, the City Council desires to approve the application for Site Plan approval from Dinesh Pandya, Trustee, to develop two 20-story high-rise buildings, consisting of 150 resort hotel rooms and 209 resort hotel suites as well as a +/- 30,000 square foot spa and also +/- 10,000 square feet of restaurant and bar space, within the Resort Hotel (RH) zoning district, at 3100 North Ocean Drive.

NOW, THEREFORE, BE IT RESOLVED BY THE CITY COUNCIL OF THE CITY OF RIVIERA BEACH, PALM BEACH COUNTY, FLORIDA AS FOLLOWS:

SECTION 1. The City Council finds that the application for Site Plan approval from Dinesh Pandya, Trustee, to develop two 20-story high-rise buildings, consisting of 150 resort hotel rooms and 209 resort hotel suites as well as a +/- 30,000 square foot spa and also +/- 10,000 square feet of restaurant and bar space, within the Resort Hotel (RH) zoning district, at 3100 North Ocean Drive, parcel control number 56-43-42-26-01-001-0030 and 56-43-42-27-03-013-0120, is substantially consistent with the site plan and elevation(s) provided to the Zoning Board of Adjustment in 2004 (VA-04-03) and also consistent with the City's Comprehensive Plan and the City's Land Development Regulations.

SECTION 2. The City Council approves the Wellness Resort and Spa site plan application from Dinesh Pandya, Trustee (hereinafter "developer" or Wellness Resort and Spa"), with the following conditions:

1. A two-year landscaping performance bond for one hundred and ten percent (110%) of the value of landscaping and irrigation shall be required before the final certificate of occupancy is issued, in accordance with City Code of Ordinances Section 31-603.

2. All future advertising must state that the development is located in the City of Riviera Beach. Fees and penalties in accordance with City Code Sec. 31-554 will be levied against the property owner and/or business for violation of this condition.

3. Construction must be initiated within 18 months of the effective date of this resolution in accordance with Section 31-60(b), of the City Code of Ordinances. Demolition, site preparation or land clearing shall not be considered construction. Building permit application and associated plans and documents shall be submitted in its entirety and shall not be accepted by City staff in a partial or incomplete manner, per the Florida Building Code.

4. This development must receive final Certificate of Occupancy from the City for all buildings and units approved within five years of the approval of this resolution (by

October 12, 2020) or the resolution shall be considered null and void, requiring the applicant to resubmit application for site plan approval and re-initiate the site plan approval process.

5. Once this resolution is passed and approved, and if litigation ensues, this resolution is upheld by a court of competent jurisdiction and all appeal periods have expired, this resolution shall supersede any previous site plan approval resolutions associated with this property, causing previous site plan approval resolutions to be null and void.

6. City council authorizes City staff to approve future amendments to this site plan administratively so long as the site plan does not deviate greater than five percent (5%) from the originally approved submittal.

7. Guest parking spaces denoted on the site plan shall be maintained for guest use and may not be sold or reserved for private use.

8. Prior to sale of individual units, the developer shall advise potential owners that this property and the adjacent property to the north have a Resort Hotel Zoning and Future Land Use Designation, thus, customary property uses and events are to be expected, including weddings and other gatherings that may include music, etc.

9. A unity of title for parcels known by parcel control number 56-43-42-26-01-001-0030, and 56-43-42-27-03-013-0120 shall be completed and provided to the City prior to issuance of a City building permit.

10. A sea turtle site lighting plan shall be completed by the developer, and approved by Palm Beach County Environmental Resources Management and submitted to the City prior to issuance of a City building permit.

11. Building height for the Wellness Center and Spa proposal must adhere to City Land Development Regulations, specifically Sec. 31-529(4), "*Maximum building height*: 20 stories or 200 feet, excluding mechanical facilities, ornamental towers and antennas, which shall not exceed twenty feet in additional height."

12. A 5 foot public access easement on the south side of the property as indicated on the site plan shall be granted and maintained in perpetuity by the property owner. The southernmost fence shall be relocated to the north side of the 5 foot public easement to provide for access.

13. Existing pathways through the dune area from the access easements to the north and south of the property shall remain intact and unaltered by this proposal.

14. Ten percent (10%) of upper management jobs will be targeted for preference to qualified Riviera Beach residents for a minimum of three years from approval, with semi-annual employment status reports provided to the City Council.

15. Wellness Resort and Spa will not voluntarily apply for tax abatement for the property to reduce taxes due to the City for a time period of ten years after issuance of Certificate of Occupancy.

16. Neither Wellness Resort and Spa nor its successors will ask applicants for employment about past criminal history until an offer for employment is extended.

SECTION 3. The associated site plan, landscape plan and elevations are attached hereto as Exhibit "A", "B" and "C" and shall be archived as a part of this resolution.

SECTION 4. Should any one or more of the provisions or elements of this resolution be held invalid, such provision or element shall be null and void, and shall be deemed separate from the remaining provisions or elements and shall in no way affect the validity of any of the remaining provisions or elements of this resolution.

SECTION 5. This resolution shall take effect immediately upon approval.

PASSED and APPROVED this 12th **day of** OCTOBER **, 2015.**

[REMAINDER OF PAGE INTENTIONALLY BLANK]

APPROVED:

THOMAS A. MASTERS
MAYOR

DAWN S. PARDO
CHAIRPERSON

ATTEST:

CLAUDENE L. ANTHONY
CERTIFIED MUNICIPAL CLERK
CITY CLERK

TERENCE D. DAVIS
CHAIR PRO TEM

BRUCE A. GUYTON
COUNCILPERSON

KASHAMBA L. MILLER-ANDERSON
COUNCILPERSON

CEDRICK A. THOMAS
COUNCILPERSON

MOTIONED BY: C. THOMAS

SECONDED BY: T. DAVIS

B. GUYTON	AYE
K. MILLER-ANDERSON	AYE
C. THOMAS	AYE
D. PARDO	NAY
T. DAVIS	AYE

REVIEWED AS TO LEGAL SUFFICIENCY

PAMALA H. RYAN, B.C.S.
CITY ATTORNEY

DATE: 11/4/15

STATE OF FLORIDA

OFFICE OF THE GOVERNOR

EXECUTIVE ORDER NUMBER 16-149

(Amended Emergency Order for Zika Virus)

WHEREAS, the World Health Organization declared a Public Health Emergency of International Concern related to the Zika virus on February 1, 2016; and

WHEREAS, there have been two-hundred thirteen confirmed travel-related cases of the Zika virus in Florida (of which forty have been pregnant women) in Alachua, Brevard, Broward, Clay, Collier, Duval, Escambia, Hillsborough, Highlands, Lee, Martin, Miami-Dade, Okaloosa, Orange, Osceola, Palm Beach, Pasco, Pinellas, Polk, Santa Rosa, Seminole, St. Johns and Volusia Counties; and

WHEREAS, the Zika virus is transmitted by a bite from an infected Aedes mosquito and other transmittal methods are still being determined; and

WHEREAS, the Zika virus has been associated with microcephaly and neurological disorders including Guillain- Barré Syndrome; and

WHEREAS, instances of microcephaly and neurological disorders have been diagnosed in infants and are believed to have been contracted in utero as a result of the mother being bitten by an infected Aedes mosquito; and

WHEREAS, although Florida's current two-hundred thirteen Zika cases were travel-related, Aedes mosquitos are common in Florida; and

WHEREAS, on February 3, 2016, I issued Executive Order 16-29 ordering the State Surgeon General to declare a public health emergency; and

NOW, THEREFORE, I, RICK SCOTT, as Governor of Florida, by virtue of the authority vested in me by Article IV, Section 1(a) of the Florida Constitution and by the Public Health Act, the Florida Emergency Management Act, as amended, and all other applicable laws, promulgate the following Executive Order, to take immediate effect:

Section 1. Because of the foregoing conditions, I declare that a state of emergency exists in the following counties in the State of Florida: Alachua, Brevard, Broward, Clay, Collier, Duval, Escambia, Hillsborough, Highlands, Lee, Martin, Miami-Dade, Okaloosa, Orange, Osceola, Palm Beach, Pasco, Pinellas, Polk, Santa Rosa, Seminole, St. Johns and Volusia Counties. Further, I direct the State Health Officer and Surgeon General, Dr. Celeste Philip, to declare a public health emergency in Alachua, Brevard, Broward, Clay, Collier, Duval, Escambia, Hillsborough, Highlands, Lee, Martin, Miami-Dade, Okaloosa, Orange, Osceola, Palm Beach, Pasco, Pinellas, Polk, Santa Rosa, Seminole, St. Johns and Volusia Counties, pursuant to her authority in section 381.00315, Florida Statutes. The State Health Officer is authorized and directed to use her judgment as to the duration and the geographical boundaries of this public health emergency.

Section 2. Pursuant to section 252.36(1)(a), Florida Statutes, the Executive Office of the Governor may waive all statutes and rules affecting budgeting to the extent necessary to provide budget authority for state agencies to cope with this emergency. The requirements of sections 252.46 and 120.54(4), Florida Statutes, do not apply to any such waiver issued by the Executive Office of the Governor.

Section 3. I find that the demands placed upon the funds appropriated to the agencies of the State of Florida and to local agencies are unreasonably great and may be inadequate to pay the costs of coping with this disaster. In accordance with section 252.37(2), Florida Statutes, I direct that sufficient funds be made available, as needed, by transferring and expending moneys

appropriated for other purposes, moneys from unappropriated surplus funds, or from the Budget Stabilization Fund.

Section 4. In accordance with section 381.0011(7), Florida Statutes, I direct the State Health Officer to take any action necessary to protect the public health. Further, I direct the State Health Officer to immediately notify the Commissioner of Agriculture of this threat to public health pursuant to section 388.45, Florida Statutes. Furthermore, this statute authorizes the Commissioner of Agriculture to issue a mosquito declaration in Alachua, Brevard, Broward, Clay, Collier, Duval, Escambia, Hillsborough, Highlands, Lee, Martin, Miami-Dade, Okaloosa, Orange, Osceola, Palm Beach, Pasco, Pinellas, Polk, Santa Rosa, Seminole, St. Johns and Volusia Counties. Special attention shall be paid to residential areas, as CDC guidance indicates that backpack mosquito spray measures may be most effective.

Section 5. The State Health Officer is directed to follow the guidelines established by the Centers for Disease Control and Prevention ("CDC") in establishing protocols to control the spread of the Zika virus and educate the public on prevention.

Section 6. In accordance with section 381.0011(7), Florida Statutes, I designate the Florida Department of Health as the lead state agency to coordinate emergency response activities among the various state agencies and local governments. The State Health Officer, or her designee, shall advise the Executive Office of the Governor on the implementation of these emergency response activities.

Section 7. All actions taken by the State Health Officer with respect to this emergency before the issuance of this Executive Order are ratified.

Section 8. I hereby direct the Florida Department of Health to make its own determinations as to further resources and information needed in the State from the CDC to combat the spread of Zika and other measures that may need to be taken to protect public health.

Section 9. I hereby direct the Department of Environmental Protection and the Fish and Wildlife Conservation Commission to support the Department of Agriculture and Consumer Services in any way as it develops extensive mosquito control plans to contain the spread of this illness in partnership with Florida's counties, cities, and mosquito control districts.

Section 10. All agencies under the direction of the Governor are directed to fully cooperate with the Florida Department of Health, and any representative thereof in the furtherance of this Order. Agencies not under the direction of the Governor are requested to provide such assistance as is required.

Section 11. Except as amended herein, Executive Order 16-29, is ratified and reaffirmed.

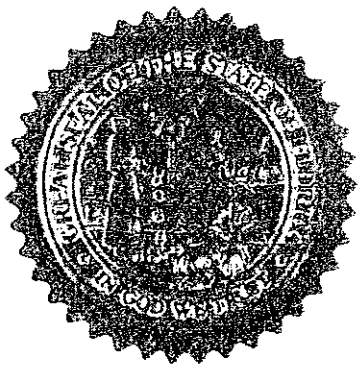

IN TESTIMONY WHEREOF, I have hereunto set my hand and caused the Great Seal of the State of Florida to be affixed, at Tallahassee, this 23rd day of June, 2016.

GOVERNOR

ATTEST:

SECRETARY OF STATE

STATE OF FLORIDA

OFFICE OF THE GOVERNOR

EXECUTIVE ORDER NUMBER 16-193

(Amended Emergency Order for Zika Virus)

WHEREAS, the World Health Organization declared a Public Health Emergency of International Concern related to the Zika virus on February 1, 2016; and

WHEREAS, on February 3, 2016, I issued Executive Order 16-29 ordering the State Surgeon General to declare a public health emergency and directing the State Health Officer to use her judgment as to the duration and the geographical boundaries of this public health emergency; and

WHEREAS, on June 23, 2016, I issued Executive Order 16-149 expanding the State's response by declaring a state of emergency under the Florida Emergency Management Act; and

WHEREAS, no state of emergency declared pursuant to the Florida Emergency Management Act may continue for more than 60 days unless renewed by the Governor; and

WHEREAS, the Zika virus poses a continuing threat to the health safety and welfare of the State of Florida and its residents.

NOW, THEREFORE, I, RICK SCOTT, as Governor of Florida, by virtue of the authority vested in me by Article IV, Section 1(a) of the Florida Constitution and by the Public Health Act, the Florida Emergency Management Act, as amended, and all other applicable laws, promulgate the following Executive Order, to take immediate effect:

Section 1. The state of emergency declared in Executive Order 16-149 will be extended for the 60 days following the issuance of this order.

Section 2. All actions taken by the State Health Officer with respect to this emergency before the issuance of this Executive Order are ratified, and she is directed to continue to use her discretion relating to the duration and the geographical boundaries of this public health emergency and the responses authorized by the Public Health Act.

Section 3. Except as amended herein, Executive Orders 16-29 and 16-149 are ratified and reaffirmed.

Section 4. This Executive Order will expire 60 days from this date unless extended within that time except for Section 2 and emergency responses authorized by the Public Health Act, which shall continue at the discretion of the State Health Officer.

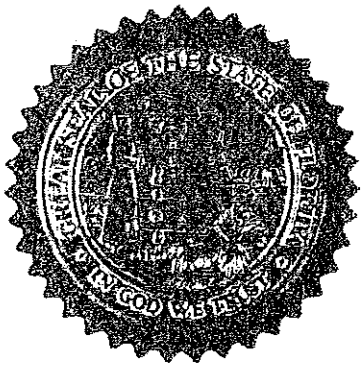

IN TESTIMONY WHEREOF, I have hereunto set my hand and caused the Great Seal of the State of Florida to be affixed, at Tallahassee, this 19th day of August, 2016.

GOVERNOR

ATTEST:

SECRETARY OF STATE

STATE OF FLORIDA

OFFICE OF THE GOVERNOR

EXECUTIVE ORDER NUMBER 16-233

(Amended Emergency Order for Zika Virus)

WHEREAS, the World Health Organization declared a Public Health Emergency of International Concern related to the Zika virus on February 1, 2016; and

WHEREAS, on February 3, 2016, I issued Executive Order 16-29 ordering the State Surgeon General to declare a public health emergency and directing the State Health Officer to use her judgment as to the duration and the geographical boundaries of this public health emergency; and

WHEREAS, on June 23, 2016, I issued Executive Order 16-149 expanding the State's response by declaring a state of emergency under the Florida Emergency Management Act; and

WHEREAS, on August 19, 2016, I issued Executive Order 16-193 extending the declaration of a state of emergency under the Florida Emergency Management Act; and

WHEREAS, no state of emergency declared pursuant to the Florida Emergency Management Act may continue for more than 60 days unless renewed by the Governor; and

WHEREAS, the Zika virus poses a continuing threat to the health safety and welfare of the State of Florida and its residents.

NOW, THEREFORE, I, RICK SCOTT, as Governor of Florida, by virtue of the authority vested in me by Article IV, Section 1(a) of the Florida Constitution and by the Public Health Act, the Florida Emergency Management Act, as amended, and all other applicable laws, promulgate the following Executive Order, to take immediate effect:

Section 1. The state of emergency declared in Executive Order 16-149 and extended by Executive Order 16-193 will be extended for the 60 days following the issuance of this order.

Section 2. All actions taken by the State Health Officer with respect to this emergency before the issuance of this Executive Order are ratified, and she is directed to continue to use her discretion relating to the duration and the geographical boundaries of this public health emergency and the responses authorized by the Public Health Act.

Section 3. Except as amended herein, Executive Orders 16-29, 16-149, and 16-193 are ratified and reaffirmed.

Section 4. This Executive Order will expire 60 days from this date unless extended within that time except for Section 2 and emergency responses authorized by the Public Health Act, which shall continue at the discretion of the State Health Officer.

IN TESTIMONY WHEREOF, I have hereunto set my hand and caused the Great Seal of the State of Florida to be affixed, at Tallahassee, this 18th day of October, 2016.

GOVERNOR

ATTEST:

SECRETARY OF STATE

FILED
2016 OCT 18 PM 1:29
DEPARTMENT OF STATE
TALLAHASSEE, FLORIDA

Governor Scott's Executive Order Allows A Time Extension for Development Orders Due to the Zika Virus

On June 23, 2016, Governor Scott declared a state of emergency for Palm Beach County, based on the Zika virus.

Executive Order Number 16-149 became effective June 23, 2016. Per Section 252.363, F.S. (enacted by SB 2156, in 2011), the declaration of a state of emergency tolls (extends) the period remaining to exercise the rights under a Palm Beach County development order for the duration of the emergency declaration plus an additional six months.

In this case, the Executive Order has had **two** 60-day extensions (EO 16-193 and EO 16-233). So, the time extension for the development order will total **363 days** (unless another extension is signed). The 363 days will be added to the due dates submitted by the applicant on the time extension request form. The extension will be applied to commencement dates, buildout dates, and mitigation activities, including the next phase of a phased development.

The Monitoring Section of the County's PZ&B Department will process the development order time extension application for owners that apply for it (or agents representing the owner).

The time extension application form is posted on the (PZ&B) Monitoring Section web site at:

http://discover.pbcgov.org/pzb/planning/Projects-Programs/Monitoring.aspx

Anyone wishing to apply for this time extension, should complete one application form for each development order, and attach a check for **$277** to each extension request (to cover processing).

The deadline for submitting this application is **March 20, 2017**.

This time extension would be appropriate for any project which might not commence or plat by the current commencement date, or for conditions that might not be satisfied by their due dates.

For more information, call David Wiloch at 561-233-5593, or email to: DWiloch@pbcgov.org

ACTION STEPS

- Print the application from the website and complete it (agents will need owner's authorization).
- Include in the application **all due dates** that you wish to have extended: such as commencement, dated conditions, or Traffic Performance Standards.
- Attach a check for **$277**, made out to **Palm Beach County Board of County Commissioners.**
- Mail or deliver the application to the Monitoring Section of the Planning Division, on the 2nd floor of the Vista Center (address is on the form).

CITY OF RIVIERA BEACH CITY COUNCIL
AGENDA ITEM SUMMARY

Meeting Date: 5/3/2017

Agenda Category: DISCUSSION AND DELIBERATION

Subject: APPROVAL OF FINALIST FOR THE POSITION OF UD EXECUTIVE DIRECTOR

Recommendation/Motion: RECOMMENDS COUNCIL APPROVAL THIS ITEM.

Originating Dept	UTILITY DISTRICT	**Costs**	
User Dept.	UTILITY DISTRICT	**Funding Source**	
Advertised	No	**Budget Account Number**	
Date			
Paper			
Affected Parties	Not Required		

Background/Summary:

As part of the process to select a new Executive Director of the Utility District, twenty seven (27) candidates originally submitted applications, some withdrew or did not return the inventory assessment evaluation tool leaving 12 candidates remaining in the process.

In an effort to move forward, on April 4, 2017, staff provided each City Council/Board Member with a copy of the resume, or application of the remaining 12 candidates along with their respective responses to an inventory assessment evaluation tool created by the Human Resources Department. In addition, a Candidate Evaluation Form outlining 10 key performance areas the City Council can use during the evaluation of each candidate. The evaluation form provided Council with a mechanism to rate each candidate based on a score of 1-10, one (1), being the lowest possible score in a category to a ten (10) being the highest in a category. The highest possible score overall is 100 points. Once the candidates have been rated by City Council Members, the top five scores would move continue in the process and participate in the oral interview process. In the event of a tie among the top five (5) scores, all candidates whose score falls within the top five scores will also participate in the oral interview process. This could extend the total candidates participating in the interview process beyond five.

At the time of this memorandum, the City Council is in the process of completing the evaluation form. The listing of final scores as rated by Council Members, along with the candidates with the top five (5) top scores will be provided under separate cover as soon as the results are received. The candidates with the top five (5) scores will be contacted and invited to participate in the interview process.

Fiscal Years

Capital Expenditures

Operating Costs
External Revenues
Program Income (city)
In-kind Match (city)
Net Fiscal Impact
NO. Additional FTE Positions (cumulative)

III. Review Comments

A. Finance Department Comments:

B. Purchasing/Intergovernmental Relations/Grants Comments:

C. Department Director Review:

Contract Start Date

Contract End Date

Renewal Start Date

Renewal End Date

Number of 12 month terms this renewal

Dollar Amount

Contractor Company Name

Contractor Contact

Contractor Address

Contractor Phone Number

Contractor Email

Type of Contract

Describe

ATTACHMENTS:

File Name	Description	Upload Date	Type
4_12_17_Approval_of_Finalist_for_the_Position_of_UD_Executive_Director.pdf	MEMO	4/12/2017	Backup Material
Memo_to_Council_ref_Executive_Director_selection_process.pdf	Memo to Council ref Executive Director selection process	4/12/2017	Cover Memo
Applications.pdf	Applications	4/19/2017	Backup Material

REVIEWERS:

Department	Reviewer	Action	Date
City Manager	Jones, Danny	Approved	4/12/2017 - 7:23 PM

CITY OF RIVIERA BEACH **CITY MANAGER'S OFFICE**

INTER-DEPARTMENTAL COMMUNICATION

TO: **HONORABLE MAYOR AND CITY COUNCIL MEMBERS**

THROUGH: **JONATHAN E. EVANS, CITY MANAGER**

FROM: **TROY F. PERRY, ACTING EXECUTIVE DIRECTOR OF UTILITIES**

DATE: **APRIL 12, 2017**

SUBJECT: **APPROVAL OF FINALIST FOR THE POSITION OF UTILITY DISTRICT EXECUTIVE DIRECTOR**

Introduction

This memorandum is to request the City Council's approval of the final list of candidates as evaluated by Council Members to participate in the interview process for the vacant position of Utility District Executive Director.

Background

As part of the process to select a new Executive Director of the Utility District, twenty seven (27) candidates originally submitted applications, some withdrew or did not return the inventory assessment evaluation tool leaving 12 candidates remaining in the process.

In an effort to move forward, on April 4, 2017, staff provided each City Council/Board Member with a copy of the resume, or application of the remaining 12 candidates along with their respective responses to an inventory assessment evaluation tool created by the Human Resources Department. In addition, a Candidate Evaluation Form outlining 10 key performance areas the City Council can use during the evaluation of each candidate. The evaluation form provided Council with a mechanism to rate each candidate based on a score of 1-10, one (1), being the lowest possible score in a category to a ten (10) being the highest in a category. The highest possible score overall is 100 points. Once the candidates have been rated by City Council Members, the top five scores would move continue in the process and participate in the oral interview process. In the event of a tie among the top five (5) scores, all candidates whose score falls within the top five scores will also participate in the oral interview process. This could extend the total candidates participating in the interview process beyond five.

At the time of this memorandum, the City Council is in the process of completing the evaluation form. The listing of final scores as rated by Council Members, along with the candidates with the top five (5) top scores will be provided under separate cover as soon as the results are received. The candidates with the top five (5) scores will be contacted and invited to participate in the interview process.

Budget Impact

As part of the selection process for the position of Executive Director of Utilities, the City may incur travel costs for some candidates or small ancillary costs associated with hosting a process that involves candidates and public engagement during planned events.

Budget Impact cont.

While the actual costs of these facets are unknown, staff will provide Council with a summary of all costs; however, if the overall costs exceeds the manager's authority according to the city's procurement policy, staff will bring an agenda item forward for Council's consideration and approval.

Recommendation

In an effort to ensure consistency and transparency in the process to select the new Executive Director of Utilities, staff respectfully recommends approval of the list of the top five (5) scores to participate in the interview process for Executive Director of Utilities.

Attachments:

1. Executive Director Ranking Form (this document will be provided under separate cover)
2. Utility District Director Interview Schedule (draft)
3. Candidate Evaluation Form (sample)

DRAFT

Utility District Director Interview Schedule

Date: TBD

Time	1:1 with City Manager	Staff Interview (UD Employees)	Executive Team Interview	Tour of the City	Public Interview by Utility District (Public Interview)
9:15am-10:15am	Candidate #1	Candidate #2	Candidate #3	Candidate #4	
10:30am-11:30am	Candidate #2	Candidate #3	Candidate #4	Candidate #5	
11:45am-12:45pm	Break	Break	Break	Break	
1:00pm-2:00pm	Candidate #3	Candidate #4	Candidate #5	Candidate #1	
2:15pm-3:15pm	Candidate #4	Candidate #5	Candidate #1	Candidate #2	
3:30pm-4:30pm	Candidate #5	Candidate #1	Candidate #2	Candidate #3	
4:45pm-5:45pm	Break	Break	Break	Break	
6:00pm-6:30pm					Candidate #1
6:40pm-7:10pm					Candidate #2
7:20pm-7:50pm					Candidate #3
8:00pm-8:30pm					Candidate #4
8:40pm-9:10pm					Candidate #5

CITY OF RIVIERA BEACH CANDIDATE EVALUATION FORM

CANDIDATE NAME:

RATER: _____

DATE: _____

****

Instructions: Score each key performance area on a scale of 1 to 10
(1 is the lowest possible score and 10 is the highest possible score.
The candidates with the highest scores will be invited for an interview

---

SCORE	KEY PERFORMANCE AREA
1. _____	Ability to provide written communication
2. _____	Staff and supervisory experience
3. _____	Financial management (budgeting, capital, construction management)
4. _____	Executive Public Utility Experience
5. _____	Outside agency and community engagement
6. _____	Project management experience
7. _____	Experience communicating with a governing board
8. _____	Experience communicating with internal staff and departments
9. _____	Response to regulatory issues
10. _____	Staff development and training

Total Score _____

CITY OF RIVIERA BEACH **CITY MANAGER'S OFFICE**

INTER-DEPARTMENTAL COMMUNICATION

TO: **HONORABLE MAYOR AND CITY COUNCIL MEMBERS**

FROM: **TROY F. PERRY, ASSISTANT TO THE CITY MANAGER**

DATE: **MARCH 24, 2017**

SUBJECT: **RECOMMENDED PROCESS TO SELECT EXECUTIVE DIRECTOR OF THE UTILITY DISTRICT**

As part of the process to select a new Executive Director for the Utility District, staff is providing you with a recommended process to evaluate the candidate's application, resume and an inventory assessment evaluation tool.

As you know, 27 candidates originally submitted applications, some withdrew or did not return the inventory assessment evaluation tool leaving 12 candidates remaining in the process.

In an effort to move forward, staff is providing each City Council/Board Member with a copy of the resume, or application of each candidate along with their respective responses to an inventory assessment evaluation tool created by the Human Resources Department. In addition, you will find a Candidate Evaluation Form outlining key performance areas to consider when rating each candidate.

There are ten (10) key performance areas and each applicant can receive a rating from 1-10, one (1), being the lowest possible score in a category to a ten (10) being the highest in a category. The highest possible score overall is 100 points. Once all of the candidates have been rated, staff is recommending that the candidates with the top five scores move on and participate in the oral interview process. In the event of a tie among the top five (5) scores, all candidates whose score falls within the top five scores will also participate in the oral interview process. This may extend the total candidates interviewed beyond five. Human Resources will contact the applicants and notify them of the remaining steps in the process.

While staff understands that the City Council/Board Members desire to be actively involved in the interview process. Given that the new City Manager has started, staff is unclear if it is the Board's desire to have the new City Manager facilitate the interview process, utilizing the format currently used to select all department directors that work directly for the City Manager. If the City Council/Board's intent is to take part in the interview process, staff will move forward scheduling the interviews with the candidates and the City Council/Board Members.

On the day of the interviews, the Human Resources Department will provide the City Council/Board Members with an orientation process and a complete review of the proposed questions, scoring sheets and address any questions. When the process begins, each candidate will be asked a total of ten (10) questions as developed by the Human Resources Department. The City Council/Board will score each candidate during the interview. The scored sheets will be collected after each interview and at the end of the entire interview process, a scoring sheet will be provided to the City Council/Board Members outlining the total scores of all candidates.

A master scoring sheet will also outline how all candidates were rated by each Councilperson/Board Member.

The candidate with the highest score will be offered the job of Executive Utility Director. However, if the highest score is obtained by multiple candidates, City Council/Board Members will vote on each candidate. The candidate with the most votes by City Council/ Board Members will be offered the job.

I have attached the following documents for your review and to use during the scoring:

1. Copy of the Executive Director job description
2. List of candidates and disposition
3. Candidate application/resume and inventory assessment
4. Candidate evaluation form

While I know City Council/Board Members are extremely busy, please return the completed candidate evaluation form by Monday, April 17, 2017. Please feel free to email your completed forms to my attention tperry@rivierabch.com or you may contact Mrs. Monroe in the Utility District Office at 561-845-4185 and she can pick-up your completed forms

Should you have any questions or if you would like to discuss this matter further, please contact my office.

TFP

C: Johnathan Evans, City Manager
Danny Jones, Deputy City Manager
Bruce Davis, Human Resources Director
Department file

THE CITY OF RIVIERA BEACH

JOB CODE#: 1073	**JOB TITLE:** UTILITY DISTRICT EXECUTIVE DIRECTOR	
EEO CLASS: 1 - OFFICIALS/ADMINISTRATORS	**SUPERVISED BY:** CITY MANAGER	
PAY GRADE: 30	DEPARTMENT: UTILITY DISTRICT	DIVISION: ADMINISTRATION
STATUS: EXEMPT	**LOCATION:**	
DEPT. APPROVAL:	**HR APPROVAL:**	**CITY MGR. APPROVAL:**
Date: 5/10/2016	**Date:** 05/10/16	**Date:** 05/10/2016

Job Summary

Under the general supervision of the City Manager, plans, manages, and directs the operations and services of the Utility District; and performs related duties as assigned. **Every employee of the City of Riviera Beach is expected to perform consistently and provide the highest level of quality services to our customers while meeting or exceeding their expectations.**

Supervision Received/Exercised

Work is performed under the general supervision of the City Manager.

Essential Duties and Responsibilities

1. Stays current on issues relative to water resources, water rights, wastewater treatment, water treatment, and other issues relative to the department's service delivery responsibilities.
2. Responsible for compliance with the regulatory requirements for water and wastewater permits including the water use permit for the health and safety of the customers.
3. Responds to and resolves sensitive and complex community and organization inquires and complaints; responds to emergencies and natural disasters.
4. Manages and coordinates development of the department budget. Monitors and approve expenditures. Advises staff on budget matters and adjust budget as necessary.
5. Oversees CIP planning and implementation.
6. Oversees operation of the department to assure all work flows in the department are prioritized appropriately; integrates and evaluates the work of the department's divisions.
7. Schedules employees, assigns work and monitors its progress. Guides and develops employees in the accomplishment of their duties; identifies and resolves staff differences, conflicts and deficiencies.
8. Represents the department and/or city on boards, committees, at council meetings, with regulatory agencies and/or within the community.
9. Ensures appropriates distribution and accountability for decision-making and the capacity to act.
10. Supervises the activities of assigned staff. Prepares staffs evaluations.
11. Monitors management staff and coaches as needed in the development, implementation and monitoring of long term departmental plans, goals, and objectives focused on achieving the City's mission and the City Council's priorities.
12. Develops and shapes an appropriate organization structure to support current and future department objectives.
13. Reviews and evaluates service delivery methods and systems including administrative and support systems and internal relationships.
14. Identifies opportunities for improvement of services and implements changes to standard operating procedures to enhance services.
15. Oversees the selection, training and evaluation programs for Utility District's personnel.
16. Prepares agenda items needing approval.
17. Identifies and communicates to the City Manager all regulatory discrepancies in a timely basis.

THE CITY OF RIVIERA BEACH

Necessary Skills, Knowledge and Abilities

- Knowledge of modern principles and practices of water resources management programs, wastewater treatment and collection, water treatment and distribution, alternative water supply planning and implementation, and customer service.
- Knowledge of civil engineering theory, techniques, principles and practices applicable to the planning, design and construction of utilities projects.
- Knowledge of applicable Federal, State, and City laws, codes, regulations and ordinances governing the administration of public utilities.
- Knowledge of general management principles and practices to include budgeting, policy and procedure development, and personnel management and supervision.
- Knowledge of principles, practices and methods of short and long range planning.
- Knowledge of the organization and functions of elected officials, appointed boards and council.
- Skill in planning, organizing, assigning and coordinating the activities of professional and technical staff.
- Skill in analyzing and evaluating information and in expressing ideas clearly when providing oral and written reports and recommendations on administrative, financial, and technical issues.
- Skill in forming cooperatives relationships with others whom do not have a direct reporting relationship.
- Skill in dealing constructively with conflict.
- Skill in researching, evaluating, and using new methods and techniques for operational improvements.
- Skill in responding with tact, composure and courtesy when dealing with individuals who may be experiencing significant stress.
- Ability to establish and maintain effective working relationships with those contacted in the course of work.
- Ability to analyze problems, identify alternatives solutions, project consequences of proposed actions, and implement recommendations in support of goals.
- Ability to communicate effectively with elected and appointed officials, regulatory bodies and directly with customers and/or neighborhood organizations.

Special Requirements

Certification in Water Treatment, Sewage Collection, and distribution preferred. Valid Florida Driver's License. Mandatory pre-employment physical and drug tests. The City of Riviera Beach maintains a drug-free workplace policy and program, as established under the guidelines of the Federal Drug Free Workplace Act of 1988 and Section 440.102, Florida Statutes. . Mandatory pre-employment physical and drug tests.

Minimum Education, Certification, and Experience Requirements

Bachelor's degree from an accredited college or university with a major in Civil Engineering, Environmental Engineering, or related field and seven (7) years experiences in a water, wastewater or public works setting to include five (5) years in management capacity with responsibility for a large division within a public utility, or any equivalent combination of training and experiences. Professional Engineer (PE) by the State of Florida preferred.

THE CITY OF RIVIERA BEACH

Selection Guidelines

Appointed position. Evaluation of education and experience; other job related assessments may be required.

Tools and Equipment Used

Motor vehicle, personal computer, printer, calculator, telephone, cellular phone, copier and fax machine.

Physical Demands

The physical demands described here are representative of those that must be met by an employee to successfully perform the essential functions of this job. Reasonable accommodations may be made to enable individuals with disabilities to perform the essential functions. Hand-eye coordination is necessary to operate computers and various pieces of office/equipment. While performing the duties of this job, the employee is frequently required to sit, talk or hear. The employee frequently is required to stand, walk, and use hands to finger, handle, or operate objects, controls, or tools listed above, reach with hands and arms, climb or balance, stoop, kneel, crouch or crawl, taste or smell.
The employee is occasionally required to sit, climb, balance, stoop, kneel, crouch, crawl, talk and hear. The employee must frequently lift and/or move more than 45 pounds, raising objects from lower to higher positions, and moving objects horizontally from position-to-position.
Specific vision abilities required by this job include close vision, depth perception, and the ability to adjust focus.

Work Environment

The work environment characteristics described here are representative of those an employee encounters while performing the essential functions of this job. Reasonable accommodations may be made to enable individuals with disabilities to perform the essential functions.

While performing the duties of this job, the employee occasionally works inside and outside in various weather conditions. The employee occasionally works near moving mechanical parts, in high precarious places, and is occasionally exposed to wet and/or humid conditions, fumes or airborne particles, toxic or caustic chemicals, extreme cold, extreme heat, and vibrations.
The noise level in the work environment is usually quiet in the office, and moderately noisy in the field.

Signature/Approval

_____

Employee **Date**

_____

Department Director **Date**

Name	Status	Iventory Assessment Rec'd
Busaari, Ola	Not Selected	
Linder, Richards	Not Selected	
Muse, Walter		X
Cox, Alva		
Syvain, James		
Paul, L. Derrick		X
Akhimie, Vince		X
Macrian, Jo Ann		
Sugerman, Dale		withdrew
Stojicevic, Milorad		
Sanders, Clifford		X
Frumenti, Carl		X
Fishch, Benjamine		

September 16th - November 29th Advertisement

Name	Status	Iventory Assessment Rec'd
Moore, James		Withdrew
Nocera, Joseph		X
Adeyoe, Adedeji		X
Simental, Alejandro		X
Bogie, Michael		X
Balaban, George		No assessment received
Pena, Tinu		X
Bundy, Scott		No assessment received
Horton, Willie		X
Cartier, Keith		Withdrew
Abolafia, Lucas		No assessment received
Linder, Richard		No assessment received
Lourcraft, Maria		X
Warner, Naubert		No assessment received

Prepared by Human Resources

CITY OF RIVIERA BEACH CANDIDATE EVALUATION FORM

CANDIDATE NAME: Akhimie, Vince

RATER: _____

DATE: _____

****

Instructions: Score each key performance area on a scale of 1 to 10
(1 is the lowest possible score and 10 is the highest possible score.
The candidates with the highest scores will be invited for an interview

SCORE	KEY PERFORMANCE AREA
1. _____	Ability to provide written communication
2. _____	Staff and supervisory experience
3. _____	Financial management and budgeting experience
4. _____	Public Utility Experience
5. _____	Outside agency and community engagement
6. _____	Decision making
7. _____	Experience communicating with a governing board
8. _____	Experience communicating with internal staff and departments
9. _____	Response to regulatory issues
10. _____	Development and implementation of a Capital Improvement Plan

Total Score _____

Adeyoye, Adedji

Riviera Beach
FLORIDA

Employment Application | Submitted: 05-Oct-2016

Adedeji Adeyoye

UTILITY DISTRICT EXECUTIVE DIRECTOR

Job Location - Riviera Beach, FL
Department - Executive
Source - CareerBuilder

Employment History

Please give accurate, complete full-time and part-time employment record. Start with your present or most recent employer for the last seven years working backwards. RESUMES MAY BE SUBMITTED IN ADDITION TO, BUT NOT IN PLACE OF ANY PORTION OF THE APPLICATION.

Kings Engineering, Llc

Job Title: Senior Project Manager

Dates Employed From: May/2009
Dates Employed To: Oct/2016
Employment Length: 7 years, 5 months

Duties: Responsible for the business developments, management of engineering and construction operations. Directs and manages engineering work with contractors, professional and sub-professional personnel. Reviewed plans, specifications and cost estimates proposed by professional and semi-professional personnel. Directs and supports overall contracts management, quality control, scheduling; managed and monitored variety of projects. Plans and manages staff training and development.

Reason For Leaving: Currently Employed

Supervisor Name: Joe Ade

Address:2880 W. Oakland Park Blvd Ft Lauderdale, FL, UNITED STATES
Phone: (954) 835-5720

Starting Rate of Pay: $80,752 (Salary)
Ending Rate of Pay: $112,855 (Salary)

May We Contact? Yes

Ecology & Environments Inc

Job Title: Project Manager

Dates Employed From: Jul/2007
Dates Employed To: Mar/2009
Employment Length: 1 year, 8 months

Duties: Managed under Ecology & Environment Inc's statewide Hazardous Waste Site / Dry-Cleaning Solvent Cleanup multimillion-dollar program to provide the

Supervisor Name: Bruce Wilson

Address:1974 Commonwealth LN Tallahassee, FL, UNITED STATES
Phone: 850-574-0000

Florida Department of Environmental Protection FDEP with the full range of turnkey services to investigate and cleanup sites contaminated with dry-cleaning solvents and other hazardous waste. Prepared feasibility studies and develop remedy solutions; preparation of permit applications; preparation of construction bid packages; evaluation of contractor bids; contract administration; review and coordination of construction documents. Project planning/work plan preparation; data collection and management; data interpretation; report preparation; technical peer/management review; electronic file management; subcontractor/vendor management; schedule and budget management. Provided engineering and environmental compliance design, construction, and operation of remediation systems.

Reason For Leaving: Company Downsizing

Starting Rate of Pay: $73,500 (Salary)
Ending Rate of Pay: $76,000 (Salary)

May We Contact? Yes

GZA GeoEnvironmental Inc

Job Title: Project Engineer

Dates Employed From: Sep/2000
Dates Employed To: Jul/2007
Employment Length: 6 years, 10 months

Duties: Managed, directed and monitored a variety of geo-technical, environmental, and land development projects such as drilling, pile driving and pile load tests, earthworks, soil and groundwater monitoring and remediation. Experiences include project management, construction monitoring, estimating, scheduling, soil and groundwater monitoring and remediation; and well sampling. Provided engineering supports and estimated quantities for the planning and designs of several engineering structures, such as roads, landfills, drainage, water and waste-water treatment structures, etc.

Reason For Leaving: To Join E&E

Supervisor Name: Tony Gomez

Address:500 Broadway Providence, FL, UNITED STATES
Phone: 401-374-2309

Starting Rate of Pay: $45,750 (Salary)
Ending Rate of Pay: $65, 950 (Salary)

May We Contact? Yes

Education

Please list all schools including high schools, colleges, trade schools or military.

Florida Atlantic University | College or University

Degree: Executive Project Manager
Major:
Location: Boca Raton, FL

Graduated? Yes

University of Rhode Island | Graduate School

Degree: MS, Civil & Environmental Engineering
Major:
Location: Kingston, RI

Graduated? Yes

Federal Polytechnic | College or University

Degree: Civil Engineering
Major:
Location: Ogun, FL

Graduated? Yes

Documents

You can provide us with your resume here and/or other supporting documents. You may either upload a file containing a formatted version, or cut & paste a text version in the space provided.

Click on the link to open the resume file if you wish to print the formatted resume.

File Name	Link
PE 2017.pdf	Download
AP LEED _BD _ C_ 2017.pdf	Download
MS Transcripts.pdf	Download
Lean Six Sigma Green Belt.pdf	Download
Adeyoye_ Adedeji_s Utility District Executive Director Resume.pdf	Download
ASCE.pdf	Download

Text Only Resume

No Text Only Resume on File

Admin Uploaded Files

There are no admin uploaded files for this applicant.

Job Questions

UTILITY DISTRICT EXECUTIVE DIRECTOR | Score Total - 50

Question	Answer	Score	Disqualifier?
Do you have a Bachelor's Degree in Civil Engineering, Environmental Engineering, or in a related field from an accrediated college or unversity? *	Yes	15	
Do you have seven (7) years of experience in water, wastewater or public works setting to include five (5) years in a management capacity with responsibility for a large division within a public utility, or any equivalent combination of training and experiences? *	Yes	0	
	More than 50 people	0	

If you do have prior management experience, how many team members have you been responsible for managing? *		
How many years of experience do you have using the Microsoft Office suite of computer software applications (including MS Word, Excel and PowerPoint)? *	More than 5 years	15
Have you completed any post-secondary education in a related field and, if so, what is the highest level completed? *	Yes, I have completed a university or college degree or higher in a related field	15
Do you currently live in or near the city where this position is based or would you be willing to relocate there? *	I am willing to relocate to there	5

Additional Questions

Background Information | Score Total - 0

Question	Answer	Score	Disqualifier?
Were you previously employed by us? *	No	0	
If so, when?	N/A		
Are you a citizen of the United States? *	Yes	0	
If no, are you authorized to work in the U.S.A.?	Yes	0	
Will you, now or in the future, require sponsorship of employment visa status (e.g., H-1 B visa status) *	No	0	
Have you been convicted of a felony or served time? * *(Archived)*	No	0	
If yes, please provide explanation below. A conviction will not necessarily bar you from employment. FALSE STATEMENTS OR OMISSIONS OF CONVICTIONS SHALL BE JUST CAUSE FOR DISQUALIFICATION FROM EMPLOYMENT. Each case is evaluated in relation to the duties and responsibilities of the position for which you have applied. Details: *(Archived)*	N/A		
State names of any relatives and friends presently employed with us, indicate relationship: *	N/A		

Job-Related Skills | Score Total - 0

Note: Do not fill out any part of the section you believe to be non-job related.

Question	Answer	Score	Disqualifier?
List languages in which you are fluent:	English Language, Yoruba (One of over 350 Nigerian languages)		
If the job requires, do you have the appropriate valid driver's license? *	Yes	0	
DL#:			
Type:			
State:	Florida		
Have you had any moving violations? *	Yes	0	
If yes, please describe:	Passing traffic lights. (2011)		
Please list any other skills, licenses or certificates that may be job related or that you feel would be of value to this job or company:	Professional Engineer		
If applying for clerical position, indicate typing speed (WPM):	100		
Do you have or possess basic computer skills? *	Yes	0	
What types of computer software can you operate?	Microsoft Office Soft-wares		
Do you have any physical condition which might limit your ability to perform the job for which you are applying? *	No	0	
If "Yes", Describe this condition and how you can perform the job in spite of it.	N/A		

Military | Score Total - 0

Question	Answer	Score	Disqualifier?
Did you serve in the U.S. Armed Forces? *	No	0	
If yes, in what branch?	N/a		
Describe any training received relevant to the position for which you are applying:	Lean Six Sigma Green Belt.		

Certification and Release

I certify that I have read and understand the applicant instructions on the first page of this form and that the answers given by me to the foregoing questions and the statements, made by me are complete and true to the best of my knowledge and

belief. I understand that any false information, omissions, or misrepresentations of facts asked for in this application may result in rejection of my application or discharge at anytime during my employment.

I authorize the City and/or its agents to verify obtain any of this information relating to my background, including, but not limited to, credit history, criminal history, and motor vehicle driving records. In this regard, while the City does not inquire into criminal history at the application phase, all individuals receiving a conditional offer of employment will be subject to a criminal history background check.

I authorize all persons, schools, companies, and law enforcement authorities to release any information concerning my background and hereby release any said persons, schools, companies, and law enforcement authorities from any liability for any damage whatsoever for issuing this information. I also understand that the use of illegal drugs is prohibited during employment. As permitted by applicable law, a medical examination, including drug screening, will be required by the City, at the City's expense.

I understand that any offer of employment will be conditional on successful completion of such medical examination, drug screening, and background examination. To the extent that I am subject to a medical examination, I agree to sign a release of medical information in connection with this such medical examination, and I understand that the results thereof relating to my capacity to perform as a City employee will be communicated to the City. I understand and agree that this release to verify information relating to my background will continue throughout my employment, if ultimately hired by the City.

✓ I agree to the above.
Signature: Adedeji Adeyoye
Date: 05-Oct-2016
IP Address: 73.49.99.221

Akhimie Vince

Riviera Beach
FLORIDA

Employment Application | Submitted: 09-Jun-2016

Vince Akhimie

UTILITY DISTRICT EXECUTIVE DIRECTOR

Job Location - Riviera Beach, FL
Department - Executive
Source - Florida League of Cities

Employment History

Please give accurate, complete full-time and part-time employment record. Start with your present or most recent employer for the last seven years working backwards. RESUMES MAY BE SUBMITTED IN ADDITION TO, BUT NOT IN PLACE OF ANY PORTION OF THE APPLICATION.

City of Daytona Beach, FL

Job Title: Utilities Directoer

Dates Employed From: Oct/2015
Dates Employed To: Jun/2016
Employment Length: 0 years, 8 months

Duties: Executive management of all municipal water and sewer utilities, $43 M budget, capital projects, and 150 staff members (see resume).

Reason For Leaving: Currently Employed

Supervisor Name: James Chisholm, City Manager

Address:301 S. Ridgewood Avenue
Daytona Beach, FL, UNITED STATES
Phone: (386) 671-8010

Starting Rate of Pay: $112,000 + $4,500 car & cell allowance (Salary)
Ending Rate of Pay: $118,600 expected raise + $4,500 car/cell allowance (Salary)

May We Contact? No

Vince Akhimie, P.E., CPM

Job Title: Management Consultant

Dates Employed From: Jul/2011
Dates Employed To: Oct/2015
Employment Length: 4 years, 3 months

Duties: Offered and provided contractual management services to municipalities, e.g., served as Public Works Director for Avon Park, FL for 9 months in 2013. See resume for details.

Supervisor Name: Self / J. Deleon in Avon Park, FL

Address:1212 Candlewood Drive
Lakeland, FL, UNITED STATES
Phone: (863) 443-4884

Starting Rate of Pay: Varied by project (Per Diem)

Reason For Leaving: Appointed to full-time position

Ending Rate of Pay: Varied by project (Per Diem)

May We Contact? Yes

City of Bremerton, WA

Job Title: Director of Public Works and Utilities

Dates Employed From: Jul/2010
Dates Employed To: Jul/2011
Employment Length: 1 year

Duties: Managed Public Works & Utilities Department, $62 M annual operating budget, $107 M C.I.P., and 120 staff. See resume for details.

Reason For Leaving: Mutual separation per employment agreement, to spend time with spouse in her successful battle with cancer.

Supervisor Name: Mayor Lent

Address: 345 6th Street, Suite 600
Bremerton, WA, UNITED STATES
Phone: (360) 473-5926

Starting Rate of Pay: $103,800/year + executive benefits (Salary)
Ending Rate of Pay: $114,600/year + executive benefits (Salary)

May We Contact? Yes

City of Riviera Beach, FL

Job Title: Director of Public Works

Dates Employed From: Nov/2006
Dates Employed To: Aug/2010
Employment Length: 3 years, 9 months

Duties: Managed 50 Public Works Department staff, budget, and all operations, and assisted Asst. City Mgr. in managing 70 employees of the City's Utilities District. operations. See resume for details.

Reason For Leaving: Took early buyout offer to all eligible and started new job in WA to help son relocate and start college there.

Supervisor Name: Ruth Jones, City Manager

Address: 600 W. Blue Heron Blvd.
Riviera Beach, FL, UNITED STATES
Phone: (561) 840-4880

Starting Rate of Pay: $92,500 + benefits (Salary)
Ending Rate of Pay: $103,300 + benefits (Salary)

May We Contact? Yes

Hartman Consulting and Design, Inc.

Job Title: Utility Consultant

Dates Employed From: Jan/2006
Dates Employed To: Oct/2006
Employment Length: 0 years, 9 months

Duties: Utility management consulting, including utility valuation, expert witness, rate studies, utility creation, due diligence, storm water management, etc.

Reason For Leaving: Accepted offer as Public Works Director with City of Riviera Beach.

Supervisor Name: Gerry Hartman, President and Owner (now deceased)

Address: 301 E Pine Street, Suite 1020
Orlando, FL, UNITED STATES
Phone: (407) 447-9095

Starting Rate of Pay: Varied by project (Commission)
Ending Rate of Pay: Varied by project (Commission)

May We Contact? Yes

City of Oviedo, FL

Job Title: Director of Public Works

Dates Employed From: Oct/2004
Dates Employed To: Jan/2006
Employment Length: 1 year, 3 months

Duties: Managed 75 employees, budget, C.I.P. and all operations of Public Works Department. See resume for details.

Reason For Leaving: Accepted offer with HCD Inc. in Orlando 1/06-10/06; accepted dept. head position with City of Riviera Beach 11/06.

Supervisor Name: City Manager

Address:400 Alexandria Street Oviedo, FL, UNITED STATES
Phone: (407) 971-5525

Starting Rate of Pay: $84,600/year + benefits (Salary)
Ending Rate of Pay: $88,000/year + benefits (Salary)

May We Contact? Yes

DeSoto County Board of County Commissioners, FL

Job Title: Director of Utilities

Dates Employed From: Apr/2003
Dates Employed To: Jun/2004
Employment Length: 1 year, 2 months

Duties: Implemented $30 M first phase of a new water and wastewater utility to promote area growth and economic development. Policy support for County ownership of new utility system faded after County's general election. See resume for details.

Reason For Leaving: Resigned and consulted 6/04-10/04; accepted new department head position with City of Oviedo 10/04.

Supervisor Name: J. Chisholm, County Administrator

Address:201 E Oak Street Arcadia, FL, UNITED STATES
Phone: (863) 993-4808

Starting Rate of Pay: $82,000/year + benefits (Salary)
Ending Rate of Pay: $84,600/year + benefits (Salary)

May We Contact? Yes

Polk County Board of County Commissioners, FL

Job Title: Director of Utilities (5 years 8/97-10/02); Traf.Eng.11/02-4/03

Dates Employed From: Aug/1997
Dates Employed To: Apr/2003
Employment Length: 5 years, 8 months

Duties: Managed the County's Utilities Division with 236 employees in five sections, $126 M operating budget, and $182 M 5-yr. C.I.P. See resume for details.

Reason For Leaving: County voted to sell County's utilites in 2002, and I resigned after serving as Utilities Director for five years. I served 5 months in stop-gap job which did not work out.

Supervisor Name: Darrell Gunn (now Exec.Dir., Harlingen TX Water)

Address:330 Church Street Bartow, FL, UNITED STATES
Phone: (863) 534-6030

Starting Rate of Pay: $76,500 + benefits (Salary)
Ending Rate of Pay: $87,800 + benefits (Salary)

May We Contact? Yes

City of Miami Beach, FL

Job Title: Director of Public Works

Dates Employed From: Nov/1994
Dates Employed To: Feb/1997
Employment Length: 2 years, 3 months

Supervisor Name: Joe Pinon, retired Asst. City Manager

Duties: Managed the Department of Public Works' 150 staff and $45 M annual operating budget and $400 M C.I.P. in eight divisions. See resume for details.

Reason For Leaving: Change of administration. Consulted 2/97 - 8/97. Also worked for the City of Beloit, WI in July/Aug/97 (this job was cut short due to unexpected family needs).

Address: 1700 Convention Center Drive
Miami Beach, FL, UNITED STATES
Phone: (305) 673-7000

Starting Rate of Pay: $85,000/year + benefits (Salary)
Ending Rate of Pay: $88,000/year + benefits (Salary)

May We Contact? Yes

Education

Please list all schools including high schools, colleges, trade schools or military.

University of Washington | Graduate School

Degree: Master of Science in Civil Engineering
Major:
Location: Seattle, WA

Graduated? Yes

University of Washington | College or University

Degree: Bachelor of Science in Civil Engineering
Major:
Location: Seattle, WA

Graduated? Yes

University of Michigan | Graduate School

Degree: Ph.D. ABD (all but dissertation) 50 sem.hrs. Civ.Eng., Pub.Admin. and Planning
Major:
Location: Ann Arbor, MI

Graduated? No

Florida State University, Center for Public Management | Graduate School

Degree: Certificate in Public Management (Certified Public Manager)
Major:
Location: Tallahassee, FL

Graduated? Yes

Emergency Management Institute - FEMA, US Dept of Homeland Security | Technical School

Degree: 24-Hour ICS 300 Level Incident Command Systems Course (Intermediate ICS for Expanding Incidents)
Major:
Location: Emmitsburg, MD

Graduated? Yes

National Incident Management System (NIMS) and Federal Emergency Management Agency (FEMA) | Technical School

Degree: 16-Hour ICS 400 Level Incident Command Systems Course (Advanced ICS) **Graduated?** Yes
Major:
Location: Emmitsburg, MD

Documents

You can provide us with your resume here and/or other supporting documents. You may either upload a file containing a formatted version, or cut & paste a text version in the space provided.

Click on the link to open the resume file if you wish to print the formatted resume.

File Name	Link
V Akhimie - 2016 Utilities Resume.pdf	Download
Vince Akhimie - Bachelor of Science Civ Eng Diploma.pdf	Download
Vince Akhimie - Master of Science Civ Eng Diploma.pdf	Download
Certified Public Manager - Certificate.pdf	Download
ICS Certificates 200_ 300_ 400_ 700.pdf	Download
PDH Certificate - FSAWWA Symposium - Sea Level Rise - 7-30-14.pdf	Download
Financial Statements Seminar.pdf	Download
V Akhimie - Certificates _ Licenses 6.pdf	Download
2015-17 Florida PE License - V Akhimie.pdf	Download
Reference - City Manager of Avon Park_ FL.pdf	Download
Miami Beach Mayor_s Award.pdf	Download
Commendation from Polk County Manager.pdf	Download
FCCMA 10-Year Service Award - 2013.pdf	Download
Vince Akhimie - Univ of Mich Transcript.pdf	Download
Vince Akhimie - Univ of WA BSCE _ MSCE Transcript.pdf	Download

Text Only Resume

No Text Only Resume on File

Admin Uploaded Files

There are no admin uploaded files for this applicant.

Job Questions

UTILITY DISTRICT EXECUTIVE DIRECTOR | Score Total - 50

Question	Answer	Score	Disqualifier?
Do you have a Bachelor's Degree in Civil Engineering, Environmental Engineering, or in a related field from an accrediated college or unversity? *	Yes	15	
Do you have seven (7) years of experience in water, wastewater or public works setting to include five (5) years in a management capacity with responsibility for a large division within a public utility, or any equivalent combination of training and experiences? *	Yes	0	
If you do have prior management experience, how many team members have you been responsible for managing? *	More than 50 people	0	
How many years of experience do you have using the Microsoft Office suite of computer software applications (including MS Word, Excel and PowerPoint)? *	More than 5 years	15	
Have you completed any post-secondary education in a related field and, if so, what is the highest level completed? *	Yes, I have completed a university or college degree or higher in a related field	15	
Do you currently live in or near the city where this position is based or would you be willing to relocate there? *	I am willing to relocate to there	5	

Additional Questions

Background Information | Score Total - 0

Question	Answer	Score	Disqualifier?
Were you previously employed by us? *	Yes	0	
If so, when?	November 2006 to August 2010		
Are you a citizen of the United States? *	Yes	0	
Will you, now or in the future, require sponsorship of employment visa status (e.g., H-1 B visa status) *	No	0	
Have you been convicted of a felony or served time? * *(Archived)*	No	0	

If yes, please provide explanation below. A conviction will not necessarily bar you from employment. FALSE STATEMENTS OR OMISSIONS OF CONVICTIONS SHALL BE JUST CAUSE FOR DISQUALIFICATION FROM EMPLOYMENT. Each case is evaluated in relation to the duties and responsibilities of the position for which you have applied. Details: *(Archived)*	N/A	
State names of any relatives and friends presently employed with us, indicate relationship: *	N/A	
I have uploaded the required drivers license, educational certificates and DD214, etc. in the Document section. * *(Archived)*	Yes	0

Job-Related Skills | Score Total - 0

Note: Do not fill out any part of the section you believe to be non-job related.

Question	Answer	Score	Disqualifier?
List languages in which you are fluent:	English		
If the job requires, do you have the appropriate valid driver's license? *	Yes	0	
DL#:			
Type:			
State:	WA		
Have you had any moving violations? *	Yes	0	
If yes, please describe:	One in July 2013 due to a not-at-fault accident in an intersection making a legal left turn, struck by a speeding driver who hit my car broadside, who was running late to catch a flight. My insurance company contested but lost the case; and both drivers were cited. However, my citation was adjudicated.		
Please list any other skills, licenses or certificates that may be job related or that you feel would be of value to this job or company:	I am a licensed Professional Engineer (P.E.) registered in the States of Florida and Washington, a Certified Public Manager (CPM) in the State of Florida, and have been certified by FEMA and NIMS (the National Incident Management System) for emergency management.		
Do you have or possess basic computer skills? *	Yes	0	
What types of computer software can you operate?	Microsoft Office Suite; engineering models, research tools, etc.		

Do you have any physical condition which might limit your ability to perform the job for which you are applying? *	No	0
If "Yes", Describe this condition and how you can perform the job in spite of it.	N/A	

Military | Score Total - 0

Question	Answer	Score	Disqualifier?
Did you serve in the U.S. Armed Forces? *	No	0	
If yes, in what branch?	N/A		
Describe any training received relevant to the position for which you are applying:	I have completed extensive continuing education required to maintain my State of Florida Professional Engineering license, e.g., have already completed 16 hours of the 18 hrs. now required to renew P.E. license for 2017-2019. Training offered by the American Water Works Association, Florida Section (FSAWWA), the Florida Water Resource Conference (FWRC), and the Water Environment Federation (WEF), and FEMA keeps me current with the latest water and wastewater technology, regulatory compliance issues, management best practices, etc. In addition, I hold both the Bachelor's and Master's degrees in Civil Engineering, and completed 50 hours beyond the Master's degree in Civil Engineering and Public Administration as well, all of which are directly relevant to this position. I am also a Certified Public Manager in the State of Florida.		

Certification and Release

I certify that I have read and understand the applicant instructions on the first page of this form and that the answers given by me to the foregoing questions and the statements, made by me are complete and true to the best of my knowledge and belief. I understand that any false information, omissions, or misrepresentations of facts asked for in this application may result in rejection of my application or discharge at anytime during my employment.

I authorize the City and/or its agents to verify obtain any of this information relating to my background, including, but not limited to, credit history, criminal history, and motor vehicle driving records. In this regard, while the City does not inquire into criminal history at the application phase, all individuals receiving a conditional offer of employment will be subject to a criminal history background check.

I authorize all persons, schools, companies, and law enforcement authorities to release any information concerning my background and hereby release any said persons, schools, companies, and law enforcement authorities from any liability for any damage whatsoever for issuing this information. I also understand that the use of illegal drugs is prohibited during employment. As permitted by applicable law, a medical examination, including drug screening, will be required by the City, at the City's expense.

I understand that any offer of employment will be conditional on successful completion of such medical examination, drug screening, and background examination. To the extent that I am subject to a medical examination, I agree to sign a release of medical information in connection with this such medical examination, and I understand that the results thereof relating to

my capacity to perform as a City employee will be communicated to the City. I understand and agree that this release to verify information relating to my background will continue throughout my employment, if ultimately hired by the City.

☑ I agree to the above.

Signature: Vincent O. Akhimie

Date: 09-Jun-2016

IP Address: 72.239.196.28

Bogie, Michael

Riviera Beach
FLORIDA

Employment Application | Submitted: 03-Oct-2016

Michael Bogie

UTILITY DISTRICT EXECUTIVE DIRECTOR

Job Location - Riviera Beach, FL
Department - Executive
Source - Indeed - apply

Employment History

Please give accurate, complete full-time and part-time employment record. Start with your present or most recent employer for the last seven years working backwards. RESUMES MAY BE SUBMITTED IN ADDITION TO, BUT NOT IN PLACE OF ANY PORTION OF THE APPLICATION.

South Florida Water Management District

Job Title: Sr Project Manager

Dates Employed From: Dec/2014
Dates Employed To: Oct/2016
Employment Length: 1 year, 10 months

Duties: Managed design, construction, commissioning, and closeout of everglades restoration, flood control and routine upgrade programs with dollar values between $300,000 and 600,000,000.

Reason For Leaving: Currently Employed

Supervisor Name: Jim Orth

Address: 3301 Gun Club Rd West Palm Beach, FL, UNITED STATES
Phone: (561) 262-6856

Starting Rate of Pay: 81000 (Salary)
Ending Rate of Pay: 81000 (Salary)

May We Contact? No

Allied 360

Job Title: Sr Project Manager

Dates Employed From: Jan/2014
Dates Employed To: Nov/2014
Employment Length: 0 years, 10 months

Duties: responsible for selling buildings including installation then managing the installation.

Reason For Leaving: Commission based role, commissions were not as expected

Supervisor Name: Eric Stephan

Address: 101 NE 3rd Ave #300 Ft Lauderdale, FL, UNITED STATES
Phone: (561) 262-6856

Starting Rate of Pay: 40000
Ending Rate of Pay: 45000

May We Contact? No

NextEra Energy Resources

Job Title: Manager - Construction

Dates Employed From: Sep/2008
Dates Employed To: Dec/2013
Employment Length: 5 years, 3 months

Duties: Managed the design, negotiations, construction, commissioning, operations, financing, forecasting, permitting of utility scale renewable energy projects with project values from $20 MM to $2 B.

Reason For Leaving: I was tired of the excessive travel

Supervisor Name: Joe Marchese

Address: 700 Universe Blvd Juno Beach, FL, UNITED STATES
Phone: (561) 262-6856

Starting Rate of Pay: 93000 (Salary)
Ending Rate of Pay: 130000 (Salary)

May We Contact? No

Education

Please list all schools including high schools, colleges, trade schools or military.

University of Central Florida | College or University

Degree: BS Civil Engineering
Major:
Location: Orlando, FL

Graduated? Yes

University of Florida | College or University

Degree: MBA, graduation in July 2017
Major:
Location: Sunrise, FL

Graduated? No

Documents

You can provide us with your resume here and/or other supporting documents. You may either upload a file containing a formatted version, or cut & paste a text version in the space provided.

Click on the link to open the resume file if you wish to print the formatted resume.

File Name	Link
Resume - Michael Bogie.pdf	Download

Text Only Resume

No Text Only Resume on File

Admin Uploaded Files

There are no admin uploaded files for this applicant.

Job Questions

UTILITY DISTRICT EXECUTIVE DIRECTOR | Score Total - 60

Question	Answer	Score	Disqualifier?
Do you have a Bachelor's Degree in Civil Engineering, Environmental Engineering, or in a related field from an accrediated college or unversity? *	Yes	15	
Do you have seven (7) years of experience in water, wastewater or public works setting to include five (5) years in a management capacity with responsibility for a large division within a public utility, or any equivalent combination of training and experiences? *	Yes	0	
If you do have prior management experience, how many team members have you been responsible for managing? *	More than 50 people	0	
How many years of experience do you have using the Microsoft Office suite of computer software applications (including MS Word, Excel and PowerPoint)? *	More than 5 years	15	
Have you completed any post-secondary education in a related field and, if so, what is the highest level completed? *	Yes, I have completed a university or college degree or higher in a related field	15	
Do you currently live in or near the city where this position is based or would you be willing to relocate there? *	Yes, I currently live there	15	

Additional Questions

Background Information | Score Total - 0

Question	Answer	Score	Disqualifier?
Were you previously employed by us? *	No	0	
If so, when?			
Are you a citizen of the United States? *	Yes	0	
If no, are you authorized to work in the U.S.A.?			
Will you, now or in the future, require sponsorship of employment visa status (e.g., H-1 B visa status) *	No	0	
Have you been convicted of a felony or served time? * *(Archived)*	No	0	

If yes, please provide explanation below. A conviction will not necessarily bar you from employment. FALSE STATEMENTS OR OMISSIONS OF CONVICTIONS SHALL BE JUST CAUSE FOR DISQUALIFICATION FROM EMPLOYMENT. Each case is evaluated in relation to the duties and responsibilities of the position for which you have applied. Details: *(Archived)*	
State names of any relatives and friends presently employed with us, indicate relationship: *	n/a

Job-Related Skills | Score Total - 0

Note: Do not fill out any part of the section you believe to be non-job related.

Question	Answer	Score	Disqualifier?
List languages in which you are fluent:	English		
If the job requires, do you have the appropriate valid driver's license? *	Yes	0	
DL#:			
Type:			
State:			
Have you had any moving violations? *	Yes	0	
If yes, please describe:	Various speeding tickets		
Please list any other skills, licenses or certificates that may be job related or that you feel would be of value to this job or company:			
If applying for clerical position, indicate typing speed (WPM):			
Do you have or possess basic computer skills? *	Yes	0	
What types of computer software can you operate?	MS Word, Excel, PowerPoint, Outlook, Project & Access, SPSS, Primavera, and many other common programs.		
Do you have any physical condition which might limit your ability to perform the job for which you are applying? *	No	0	
If "Yes", Describe this condition and how you can perform the job in spite of it.			

Military | Score Total - 0

Question	Answer	Score	Disqualifier?
Did you serve in the U.S. Armed Forces? *	Yes	0	
If yes, in what branch?	Navy		
Describe any training received relevant to the position for which you are applying:	My time as an officer including all the relevant leadership training is relevant in nearly every job in the world. My nuclear training is relevant to any technical job.		

Certification and Release

I certify that I have read and understand the applicant instructions on the first page of this form and that the answers given by me to the foregoing questions and the statements, made by me are complete and true to the best of my knowledge and belief. I understand that any false information, omissions, or misrepresentations of facts asked for in this application may result in rejection of my application or discharge at anytime during my employment.

I authorize the City and/or its agents to verify obtain any of this information relating to my background, including, but not limited to, credit history, criminal history, and motor vehicle driving records. In this regard, while the City does not inquire into criminal history at the application phase, all individuals receiving a conditional offer of employment will be subject to a criminal history background check.

I authorize all persons, schools, companies, and law enforcement authorities to release any information concerning my background and hereby release any said persons, schools, companies, and law enforcement authorities from any liability for any damage whatsoever for issuing this information. I also understand that the use of illegal drugs is prohibited during employment. As permitted by applicable law, a medical examination, including drug screening, will be required by the City, at the City's expense.

I understand that any offer of employment will be conditional on successful completion of such medical examination, drug screening, and background examination. To the extent that I am subject to a medical examination, I agree to sign a release of medical information in connection with this such medical examination, and I understand that the results thereof relating to my capacity to perform as a City employee will be communicated to the City. I understand and agree that this release to verify information relating to my background will continue throughout my employment, if ultimately hired by the City.

☑ I agree to the above.
Signature: Michael Bogie
Date: 03-Oct-2016
IP Address: 104.179.172.243

Frumenti, Carl

Riviera Beach
FLORIDA

Employment Application | Submitted: 26-May-2016

Carl Frumenti

UTILITY DISTRICT EXECUTIVE DIRECTOR

Job Location - Riviera Beach, FL
Department - Executive
Source - Indeed - apply

Employment History

Please give accurate, complete full-time and part-time employment record. Start with your present or most recent employer for the last seven years working backwards. RESUMES MAY BE SUBMITTED IN ADDITION TO, BUT NOT IN PLACE OF ANY PORTION OF THE APPLICATION.

United Concrete Products, LLC

Job Title: Operations Manager/Quality Control Manager

Dates Employed From: Sep/2015
Dates Employed To: May/2016
Employment Length: 0 years, 8 months

Duties: Managed and supervised staff of Quality Control Technicians, Engineers, and Production Personnel in daily operations relating to concrete product applications utilized for heavy civil, roadway, bridge, sewer, fiber optic, roadway lighting, vaults, pump stations, wet wells, box culvert, and specialty product applications. Responsible for design interpretations and specification conformance on job by job basis. Oversees submittal shop drawing process, coordinates and interacts with consulting engineers in design calculations (structural, buoyancy and lifting calculations). Develops and proposes alternate engineering design and production methods to facilitate best production practices while maintaining specification compliance. Thorough knowledge of FDOT Road & Bridge Design Standards, FDOT Standard Index, ASTM, and AASHTO requirements for precast concrete structures, reinforced concrete pipe and structural elements for civil engineering and roadway construction applications. Administers and maintains five Quality Control Plans for qualification and conformance for municipal, state and federal projects requirements. Coordinates all production and inspection documentations for project/product inspection requirements for compliance verification and product certification. Currently holds of a variety of industry certifications and can function as qualifying agent for structural concrete products production facility for heavy civil and site work applications. Responsible for

Supervisor Name: Shane DeBogory (786) 402-3536

Address:8351 NW 93rd St Medley, FL, UNITED STATES
Phone: 305-885-8471

Starting Rate of Pay: 1600.00/Wk (Salary)
Ending Rate of Pay: 2200.00/Wk. (Salary)

May We Contact? Yes

annual material contract negotiations, annual operating permitting, material procurement and management, vendor and supplier management and negotiations. Functioned as inventory manager for monthly warehouse cycle counting operations. Compile and verifies monthly inventory total utilized for developing monthly financial statements. Establishes inventory min max level, re-order points for high usage items.

Reason For Leaving: Resigned to pursue other opportnities

United Concrete Products, LLC

Job Title: Operations Manager/Plant Manger

Supervisor Name: Shane DeBogory (786)-402-3536

Address: 1926 Skees Road West Palm Beach , FL, UNITED STATES
Phone: 561-686-4622

Dates Employed From: Aug/2008
Dates Employed To: Sep/2015
Employment Length: 7 years, 1 month

Starting Rate of Pay: 1480.00/Wk. (Salary)
Ending Rate of Pay: 1890.00/Wk (Salary)

May We Contact? Yes

Duties: Manages project production schedules, material acquisitions, change orders requirements, RFI's, shop drawings submittals, budget estimates, and pre-contract cost analysis and feasibility studies. United Concrete Products, LLC. -West Palm Beach, FL 2008 to Sept 2015 Operations Manager/Plant Manger Responsible for day to day operations of a concrete pipe, pre-cast structures, and pre-stress structural elements facility. Managed and supervised office and plant staff of 40-60 employees, reporting directly to the owner/CEO. Acted as General Superintendent and Project Manager for the installation of an automated concrete batch plant and storage silos for a pipe production operation. Project was completed on-time and under budget. Implemented and sustained lean principles in the production facility resulting in reduced waste and increased productivity. Recommended and executed process improvements and continuous improvement plans resulting in projected savings that exceeded $300K annually. Reduced the unit cost of concrete mix by introducing Fly Ash into mix design. (Savings of 3 to 4 Tn/Cem. Daily - '08) Reduced unit cost of concrete mix, through trials & testing process by implementing new chemical mixture, reducing cement content, & blending aggregates. (Savings of 1 to 1.2 Tn/Cem., daily - '13) Improved performance, quality and aesthetics of end product. Realized a full FTE savings by providing recommendations for a moisture and temperature control system for a concrete pipe batch mixer. Invented and managed several product implementations (handling device, stripping device, and a transportation solutions) within the pipe production business unit. Results of new devices improved overall department efficiency, reduced product breakage, and FTE reduction. Manages and maintains required certifications to qualify production facility as a certified plant and for certified specialty products. Manages resolution of customer disputes, issues and complaints. Conducts job site visits to promote business relations, investigate quality issues and complaints, and to provide coordination of work crews and equipment in the field.

Reason For Leaving: Plant was sold-transferred to to Medley Diviion

U.S. PRECAST CORPORATION

Job Title: Operations Manager

Supervisor Name: Johnny Keadle (941)258-1881

Dates Employed From: Jun/1994
Dates Employed To: Aug/2008
Employment Length: 14 years, 2 months

Duties: Responsible for the daily operation of a concrete pipe and precast production facility. Developed and maintained a staff of civil engineering technicians, production schedulers, customer service representatives, and quality control technicians. Developed and implemented work unit integration tools and production reporting (both visual and electronic) to facilitate a continuous improvement program used to understand priorities and identify conflicts, improve department thru-puts, efficiencies, flexibility, and to increase overall customer satisfaction. Key player in the implementation of an integrated resource planning and manufacturing software platform. Provided expertise in areas of scheduling and shop floor control. Developed runtimes and routings to enable accurate costs for accounting analysis. Set up all system related architecture relating to cost centers, tools, overhead rates, and production rates. Served as Quality Control Manager and responsible for system troubleshooting related to concrete batching systems and software. Managed quality assurance manuals, procedures, documentation and inspection activities for projects requiring specialized precast elements for FDOT, Bell South, MDWASA, Municipal & International Airport Projects, Water Treatment Plant Projects, Army Corp. of Engineers, Naval Station and other governing agency projects. Qualifying agent for plant certifications for FDOT Incidental Precast, FDOT Concrete Pipe Producer and FDOT Precast Drainage Structures.

Reason For Leaving: Transferred to WPB Division(Closer to home)

Address: 8351 NW 93rd St Medley, FL, UNITED STATES
Phone: 305-885-8471

Starting Rate of Pay: 1090.00/Wk. (Salary)
Ending Rate of Pay: 1310.00/Wk. (Salary)

May We Contact? Yes

TRI-COUNTY CONCRETE PRODUCTS

Job Title: Production Scheduler

Dates Employed From: Jan/1994
Dates Employed To: Jun/2004
Employment Length: 10 years, 5 months

Duties: Responsible for developing and maintaining daily production schedules for both make to stock and make to order products. Developed all customer order promise delivery dates and optimized production schedules by deployment of effective resource planning tools such as Kan-ban, cycle count, establishment of inventory min/max required service levels and b.o.m. forecasting. Developed and implemented form mapping & tool planning system, resulting in elimination of equipment conflicts, items being made late, and elimination of missed customer commitments. Course work completed in the following professional associations for this duration. (PAC, APICS)

Reason For Leaving: Transferred to Medely/U.S. Precast for new position

Supervisor Name: Jeffrey House

Address: 1926 Skees Road West Palm Beach, FL, UNITED STATES
Phone: (561)-686-4622

Starting Rate of Pay: 840.00/Wk. (Salary)
Ending Rate of Pay: 890.00/Wk. (Salary)

May We Contact? Yes

TRI-COUNTY CONCRETE PRODUCTS

Job Title: Safety Director

Supervisor Name: Joe Reul

Dates Employed From: Apr/1993
Dates Employed To: Jun/1994
Employment Length: 1 year, 2 months

Duties: Managed, trained and directed workforce of approximately 35-40 staff members in aspects of safety and training ranging from PPE, MSDS, Confined Space, "LOTO", Ergonomics, fork lift safety, pipe self-unloader, and safety training. Coordinated trainings for crane operators, crane signalers, first responders, CPR, and First Aid. Responsible for documentation of all OSHA required trainings, monthly inspection documents, fire safety inspections, and general plant safety inspections

Reason For Leaving: Transferred to Medley Divisions

Address: 1926 Skees Road West Palm Beach, FL, UNITED STATES
Phone: (561)-686-4622

Starting Rate of Pay: 690.00/Wk (Salary)
Ending Rate of Pay: 840.00/Wk (Salary)

May We Contact? Yes

TRI-COUNTY CONCRETE PRODUCTS

Job Title: ENGINEERING TECHNICIAN/ SAFETY DIRECTOR

Dates Employed From: Apr/1993
Dates Employed To: Jun/1994
Employment Length: 1 year, 2 months

Duties: Project Manager & Civil Engineering Technician, served concurrently as division Safety Director

Reason For Leaving: Transferred to Medley/U.S. Precast for new opportunity

Supervisor Name: Joe Reul

Address: 1926 Skees Road West Pal Beach, FL, UNITED STATES
Phone: (561)-686-4622

Starting Rate of Pay: 690.00/Wk. (Salary)
Ending Rate of Pay: 890.00 (Salary)

May We Contact? Yes

TRI-COUNTY CONCRETE PRODUCTS

Job Title: Civil Engineering Technician and Project Manager

Dates Employed From: Apr/1993
Dates Employed To: Jan/1994
Employment Length: 0 years, 9 months

Duties: Mastered a dynamic position requiring interpretation of civil plans and details for drainage and sewer products, for municipal, state and private projects. Responsible for civil projects, product engineering, configuration, shop drawings, production releases, job scheduling, sequencing, and maintaining congruency with customer installation plans. Responsible for communication and documentation relating to execution of large commercial projects with aspects of change orders, plan revisions, customer requests and or requirements.

Reason For Leaving: Transferred to Scheduling and Customer Service position (same company)

Supervisor Name: Buck Hester

Address: 1926 Skees Road West Palm Beach, FL, UNITED STATES
Phone: (561)-686-4622

Starting Rate of Pay: 640.00/Wk. (Salary)
Ending Rate of Pay: 840.00/Wk. (Salary)

May We Contact? Yes

Education

Please list all schools including high schools, colleges, trade schools or military.

Florida A & M University | College or University

Degree: B.S.-Construction Engineering Sciences
Major:
Location: Tallahassee, FL

Graduated? Yes

FAMU/FSU College of Engineering | College or University

Degree: Minor Civil Engineering
Major:
Location: Tallahassee, FL

Graduated? Yes

Palm Beach Junior College | College or University

Degree: A.A.- Construction Engineering
Major:
Location: Lake Worth, FL

Graduated? Yes

University of South Florida | College or University

Degree: General Undergraduate Studies (Completed at PBCC)
Major:
Location: Tampa, FL

Graduated? No

Documents

You can provide us with your resume here and/or other supporting documents. You may either upload a file containing a formatted version, or cut & paste a text version in the space provided.

Click on the link to open the resume file if you wish to print the formatted resume.

File Name	Link
Carl_Frumenti.pdf	Download
Carl Frumenti Driver_s License.pdf	Download
Industry Certifications.pdf	Download
Florida A _ M University Official Academic Transcript.pdf	Download

Text Only Resume

May 25, 2016

Dear Hiring Manager,

I would like to introduce myself, my name is Carl Frumenti. Upon review of the job and duties

prescribed for the Utility District Executive Director position, it seems to be both a challenging and exciting opportunity. I am a high energy and inquisitive person by nature, that is dedicated and passionate about this type of work. I have spent my entire professional career working in the water & waste water utilities construction, engineering, inspections, concrete and building construction industries. I have been employed by general contractors, engineers, architects and construction material producers. I have spent the last ten years of my career honing my leadership and managerial skills.

For the last 25 years, I have developed a strong work ethic and a diverse range of skill sets relating to civil engineering principles, concrete operations, project management, inspection, structural design, design and manufacturing of utility systems, material takeoffs, estimating, inventory management and budget cost analysis. During this timeframe I have developed skills and expertise with concrete production, concrete placement and field operations. Additionally, I have developed skills and expertise in design of precast products for a wide variety of water and waste water utility system design applications for as lift stations, vaults, gravity sewer manholes, water treatment clarifier troughs, odor reduction chambers, energy dissapater structures, box culvert, reinforced concrete pipe, storm drainage structures, outfall structures, trench drains, bridge pile, bridge deck, roadway lighting foundations, pull boxes, septic, oil, grease, gray water tanks and the like. Having such a variety of exposure to various civil and structural plans has enhanced my capability to identify design flaws, conflicting information, and the discipline to be detailed oriented and thorough in interpretation of design plan details, contract documents and project specification requirements.

Currently I possess and maintain a number of industry certifications relating to quality control inspection, concrete operations, and structural precast elements. In my previous position I was the Operations Manager of a large precast production facility. My experiences have allowed me to spend considerable time on water and waste water underground utility job sites and building sites. These experiences have provided opportunities where I was able to act both as a facilitator and a consultant to design engineers, contractors and inspectors. I have provided input and expertise in cases specifying installation methods, structural engineering designs, and development of standards and value added features, that aid in installation, reduce cost, and increase system longevity.

I have managed a variety of projects over the years in excess of $10M such as Ft. Lauderdale International Airport, Miami International Airport, Miramar WWTP, Dania WWTP, The Port of Palm Beach, The Port of Miami, Panther Stadium, Army Corp Projects, Naval Air Station, Homestead Air Force Base, FDOT Roadway Projects, subdivision and roadway drainage, numerous pump station and wet well projects, as well as Municipal Sanitary Sewer and Water Management Projects from Key West to Port St Lucie. In addition, I have maintained an extensive network of industry related professionals such as engineering firms, engineering consultants, general and engineering contractors, project managers, inspection agencies, vendors, and subcontractors. My experiences have also allowed involvement with a wide variety of project types requiring different classes of concrete, concrete additives, concrete repairs, and structural designs for box culverts, lift stations, injection vaults, outfall structures and other precast specialties.

My career has required me to develop a comprehensive understanding of Specifications and Standards ranging from ASTM, The Florida Department of Transportation, The Florida Bureau of Onsite Sewerage (FAC64E), WRI, CSRI, PCI, ACI, MNL-116 and 117. I have also developed a

considerable knowledge base for corrosion barrier systems, industrial coating applications and concrete repair.

Acting as an Operation Manager for the past seven years, this has afforded me opportunities to manage and learn all aspects of the functioning business unit for a variety of departments (sales, engineering, scheduling, shipping, customer service, quality control, quality assurance, inventory controls). Managing a staff of 30-40 people, and 7 direct reports has helped me become a strong leader who can effectively manage & motive people to elevate their performance and have a sense of urgency as they execute their daily work. My education and certifications in Safety, Lean, and Metrics, have facilitated continuous improvement for the business units for which I was responsible. Additionally, as operations manager I was also responsible for approval of division purchases, annual contract negotiation for raw material suppliers, operational permitting requirements, facility construction permitting, maintenance contracts, pre-pour inspection operations and field concrete operations.

In closing, my construction management degree, minor in civil engineering, coupled with my industry certifications and work experience history have me well prepared to tackle this exciting and challenging employment opportunity. I look forward to hearing from you soon, and am extremely excited about the growth and learning opportunities this position can offer.

Thank you in advance for your thoughtful consideration for this opportunity.

Sincerely yours,

Carl Frumenti

carl.frumenti@gmail.com
Carl Frumenti
Operations Manager/Quality Control Manager/Project Manager
An energetic and resourceful manager and leader with over 25 years of experience in construction, engineering, project
management and manufacturing industries specializing in concrete construction products. Skilled in inventory
management, scheduling, planning, safety, cost reduction, lean manufacturing, product engineering, project management
and materials management. An expert liaison between IT staff, regulatory agencies, vendors and customers. Hands on
experience implementing company-wide systems used to manage daily operations and to improve workflow efficiencies
within the organization. Strong problem solving skills and able to make solid business decisions after studying the facts.
Able to motivate co-workers to meet and exceed expectations. Provides creative engineering solutions to promote
efficiencies, reduce manpower, increase throughput, and eliminate waste to increase overall profitability. Certified Quality
Control Inspector for heavy civil & concrete industries.

Boynton Beach, FL 33435

Operations Manager/Quality Control Manager United Concrete Products, LLC Medley, FL
September 2015 to May 2016
Managed and supervised staff of Quality Control Technicians, Engineers, and Production Personnel in daily operations
relating to concrete product applications utilized for heavy civil, roadway, bridge, sewer, fiber optic, roadway lighting,
vaults, pump stations, wet wells, box culvert, and specialty product applications.
Responsible for design interpretations and specification conformance on job by job basis.
Oversees submittal shop drawing process, coordinates and interacts with consulting engineers in design calculations (structural, buoyancy and lifting calculations). Develops and proposes alternate engineering design and production methods to facilitate best production practices while maintaining
specification compliance. Thorough knowledge of FDOT Road & Bridge Design Standards, FDOT Standard Index, ASTM, and AASHTO requirements for precast concrete structures, reinforced concrete pipe and structural elements for civil
engineering and roadway construction applications.

Administers and maintains five Quality Control Plans for qualification and conformance for municipal, state and federal
projects requirements. Coordinates all production and inspection documentations for project/product inspection
requirements for compliance verification and product certification. Currently holds of a variety of industry certifications and can function as qualifying agent for structural concrete products production facility for heavy civil and site work
applications.

Responsible for annual material contract negotiations, annual operating permitting, material procurement and management, vendor and supplier management and negotiations.

Functioned as inventory manager for monthly warehouse cycle counting operations. Compile and verifies monthly
inventory total utilized for developing monthly financial statements. Establishes inventory min max level, re-order points for high usage items.

Operations Manager/Plant Manger United Concrete Products, LLC West Palm Beach, FL
2008 to September 2015
Manages project production schedules, material acquisitions, change orders requirements, RFI's, shop drawings
submittals, budget estimates, and pre-contract cost analysis and feasibility studies.
United Concrete Products, LLC. -West Palm Beach, FL 2008 to Sept 2015

Operations Manager/Plant Manger
Responsible for day to day operations of a concrete pipe, pre-cast structures, and pre-stress structural elements facility.
Managed and supervised office and plant staff of 40-60 employees, reporting directly to the owner/CEO. Acted as General
Superintendent and Project Manager for the installation of an automated concrete batch plant and storage silos for a pipe
production operation. Project was completed on-time and under budget.

Implemented and sustained lean principles in the production facility resulting in reduced waste and increased productivity.
Recommended and executed process improvements and continuous improvement plans resulting in projected savings
that exceeded $300K annually.

Reduced the unit cost of concrete mix by introducing Fly Ash into mix design. (Savings of 3 to 4 Tn/Cem. Daily - '08)

Reduced unit cost of concrete mix, through trials & testing process by implementing new chemical mixture, reducing
cement content, & blending aggregates. (Savings of 1 to 1.2 Tn/Cem., daily - '13) Improved performance, quality and aesthetics of end product.
Realized a full FTE savings by providing recommendations for a moisture and temperature control system for a concrete
pipe batch mixer.
Invented and managed several product implementations (handling device, stripping device, and a transportation
solutions) within the pipe production business unit. Results of new devices improved overall department efficiency,
reduced product breakage, and FTE reduction.
Manages and maintains required certifications to qualify production facility as a certified plant and for certified specialty
products.

Manages resolution of customer disputes, issues and complaints. Conducts job site visits to promote business relations,
investigate quality issues and complaints, and to provide coordination of work crews and equipment in the field.

Operations Manager U.S. PRECAST CORPORATION Medley, FL
1994 to 2008
Responsible for the daily operation of a concrete pipe and precast production facility.
Developed and maintained a staff of civil engineering technicians, production schedulers, customer service representatives, and quality control technicians.
Developed and implemented work unit integration tools and production reporting (both visual and electronic) to facilitate a continuous improvement program used to understand priorities and identify conflicts, improve department thru-puts,
efficiencies, flexibility, and to increase overall customer satisfaction.

Key player in the implementation of an integrated resource planning and manufacturing software platform. Provided
expertise in areas of scheduling and shop floor control. Developed runtimes and routings to enable accurate costs for accounting analysis. Set up all system related architecture relating to cost centers, tools, overhead rates, and production
rates. Served as Quality Control Manager and responsible for system troubleshooting related to concrete batching systems and software.

Managed quality assurance manuals, procedures, documentation and inspection activities for

projects requiring
specialized precast elements for FDOT, Bell South, MDWASA, Municipal & International Airport Projects, Water Treatment
Plant Projects, Army Corp. of Engineers, Naval Station and other governing agency projects. Qualifying agent for plant
certifications for FDOT Incidental Precast, FDOT Concrete Pipe Producer and FDOT Precast Drainage Structures.

Production Scheduler TRI-COUNTY CONCRETE PRODUCTS
1994 to 1994
Responsible for developing and maintaining daily production schedules for both make to stock and make to order products. Developed all customer order promise delivery dates and optimized production schedules by deployment of effective resource planning tools such as Kan-ban, cycle count, establishment of inventory min/max
required service levels and b.o.m. forecasting. Developed and implemented form mapping & tool planning system,
resulting in elimination of equipment conflicts, items being made late, and elimination of missed customer commitments.
Course work completed in the following professional associations for this duration. (PAC, APICS)

ENGINEERING TECHNICIAN/ SAFETY DIRECTOR TRI-COUNTY CONCRETE PRODUCTS
1993 to 1994

Safety Director TRI-COUNTY CONCRETE PRODUCTS
1993 to 1994
Managed, trained and directed workforce of approximately 35-40 staff members in aspects of safety and training ranging from PPE, MSDS, Confined Space, "LOTO", Ergonomics, fork lift safety, pipe self-unloader, and
safety training. Coordinated trainings for crane operators, crane signalers, first responders, CPR, and First Aid. Responsible for documentation of all OSHA required trainings, monthly inspection documents, fire safety inspections, and general
plant safety inspections

Civil Engineering Technician and Project Liaison TRI-COUNTY CONCRETE PRODUCTS
1993 to 1993
Mastered a dynamic position requiring interpretation of civil plans and details for drainage and sewer products, for municipal, state and private projects. Responsible for civil projects,
product engineering, configuration, shop drawings, production releases, job scheduling, sequencing, and maintaining
congruency with customer installation plans. Responsible for communication and documentation relating to execution of large commercial projects with aspects of change orders, plan revisions, customer requests and or requirements.

B.S. Construction Management Florida A & M University
Tallahassee, FL

Civil Engineering Sciences & Technologies FAMU/FSU College of Engineering

Tallahassee, FL

A.A. Engineering Sciences Palm Beach Junior College

University of South Florida
Tampa, FL

Engineering, (10+ years), Engineering Management (10+ years), Quality Assurance (10+ years), Quality Control (10+ years), Estimating (10+ years), Customer Relationship Management (10+ years), Project Management (10+ years), Project Planning (10+ years), Process Improvement (7 years), Product Development (10+ years), Inventory Management (10+ years), Inventory Control (10+ years), Safety (10+ years), Training (10+ years), Troubleshooting (7 years), Materials Management (10+ years), Performance Management (7 years), People Management (10+ years), Conflict Resolution (10+ years), Contract Negotiations (5 years), Budget Development (6 years), Budget Management (6 years), Change Management (6 years), Concrete Mix Design (5 years)

Lean Manufacturing
March 2011 to Present
40 Hr. Certification Course - The Lean Learning Center Novi, MI

CTQP Concrete Batch Plant Operator
August 2015 to August 2017
FDOT Construction Training Qualification Program

PCSA Quality Control Inspector Level II
July 2013 to July 2018
Precast Concrete Structures Association of Florida
Quality Control Personnel Certification Program

ACPA QC Technician Level I & Level II
June 2013 to June 2018
American Concrete Pipe Association
QC Technician Certification

ACI Concrete Field Testing Technician-Grade I
May 2013 to May 2018
American Concrete Institute
Certification ID#01122500

FPCA 450 Specification
September 2014 to September 2019
Florida Prestressed Concrete Association & Construction Materials Engineering Council
450 Specification Certification for Prestressed Concrete Quality Control Personnel

PCI Level III Quality Control Inspector/Technician
December 2014 to December 2019
Precast/Prestressed Concrete Institute
Quality Control Personnel Certification Level III

Certification# 14559

COMPUTER SKILLS

- Windows, MS Office,Excel, PowerPoint, ERP, MRP & PRP Planning Systems (Oracle, Baan, Titan)
- Full knowledge of materials planning systems (MRP/ERP) requirements and order generation process logic
- Intermediate Auto Cad User

Admin Uploaded Files

There are no admin uploaded files for this applicant.

Job Questions

UTILITY DISTRICT EXECUTIVE DIRECTOR | Score Total - 60

Question	Answer	Score	Disqualifier?
Do you have a Bachelor's Degree in Civil Engineering, Environmental Engineering, or in a related field from an accrediated college or unversity? *	Yes	15	
Do you have seven (7) years of experience in water, wastewater or public works setting to include five (5) years in a management capacity with responsibility for a large division within a public utility, or any equivalent combination of training and experiences? *	Yes	0	
If you do have prior management experience, how many team members have you been responsible for managing? *	More than 50 people	0	
How many years of experience do you have using the Microsoft Office suite of computer software applications (including MS Word, Excel and PowerPoint)? *	More than 5 years	15	
Have you completed any post-secondary education in a related field and, if so, what is the highest level completed? *	Yes, I have completed a university or college degree or higher in a related field	15	
Do you currently live in or near the city where this position is based or would you be willing to relocate there? *	Yes, I currently live there	15	

Additional Questions

Background Information | Score Total - 0

Question	Answer	Score	Disqualifier?
Were you previously employed by us? *	No	0	
Are you a citizen of the United States? *	Yes	0	
Will you, now or in the future, require sponsorship of employment visa status (e.g., H-1 B visa status) *	No	0	
Have you been convicted of a felony or served time? * *(Archived)*	No	0	
State names of any relatives and friends presently employed with us, indicate relationship: *	None		
I have uploaded the required drivers license, educational certificates and DD214, etc. in the Document section. * *(Archived)*	Yes	0	

Job-Related Skills | Score Total - 0

Note: Do not fill out any part of the section you believe to be non-job related.

Question	Answer	Score	Disqualifier?
List languages in which you are fluent:	English		
If the job requires, do you have the appropriate valid driver's license? *	Yes	0	
DL#:			
Type:			
State:			
Have you had any moving violations? *	Yes	0	
If yes, please describe:	Red light camera ticket (bogus)		
Please list any other skills, licenses or certificates that may be job related or that you feel would be of value to this job or company:	Copies of all certificates provided with documents		
Do you have or possess basic computer skills? *	Yes	0	
What types of computer software can you operate?	Microsoft Word, Excel, Outlook, Power Point, Autocad, Various Manufacturing Software Platforms (Oracle, Titan, Escencia)		
Do you have any physical condition which might limit your ability to perform the job for which you are applying? *	No	0	

Military | Score Total - 0

Question	Answer	Score	Disqualifier?
Did you serve in the U.S. Armed Forces? *	No	0	
Describe any training received relevant to the position for which you are applying:	Effective Leadership & Communication Training, Lean Manufacturing & Waste Management, Motivational Training-Tony Robbins, Zig Ziglar, APICS, PAC, Hydrostatic Pipe Testing, Epoxy Injection Training, Plastic Welding		

Certification and Release

I certify that I have read and understand the applicant instructions on the first page of this form and that the answers given by me to the foregoing questions and the statements, made by me are complete and true to the best of my knowledge and belief. I understand that any false information, omissions, or misrepresentations of facts asked for in this application may result in rejection of my application or discharge at anytime during my employment.

I authorize the City and/or its agents to verify obtain any of this information relating to my background, including, but not limited to, credit history, criminal history, and motor vehicle driving records. In this regard, while the City does not inquire into criminal history at the application phase, all individuals receiving a conditional offer of employment will be subject to a criminal history background check.

I authorize all persons, schools, companies, and law enforcement authorities to release any information concerning my background and hereby release any said persons, schools, companies, and law enforcement authorities from any liability for any damage whatsoever for issuing this information. I also understand that the use of illegal drugs is prohibited during employment. As permitted by applicable law, a medical examination, including drug screening, will be required by the City, at the City's expense.

I understand that any offer of employment will be conditional on successful completion of such medical examination, drug screening, and background examination. To the extent that I am subject to a medical examination, I agree to sign a release of medical information in connection with this such medical examination, and I understand that the results thereof relating to my capacity to perform as a City employee will be communicated to the City. I understand and agree that this release to verify information relating to my background will continue throughout my employment, if ultimately hired by the City.

☑ I agree to the above.
Signature: Carl Frumenti
Date: 26-May-2016
IP Address: 172.9.216.144

Horton, Willie

Riviera Beach
FLORIDA

Employment Application | Submitted: 29-Sep-2016

Willie Horton

UTILITY DISTRICT EXECUTIVE DIRECTOR

Job Location - Riviera Beach, FL
Department - Executive
Source - City of Riviera Beach - N/A

Employment History

Please give accurate, complete full-time and part-time employment record. Start with your present or most recent employer for the last seven years working backwards. RESUMES MAY BE SUBMITTED IN ADDITION TO, BUT NOT IN PLACE OF ANY PORTION OF THE APPLICATION.

City of Richmond, Virginia - Department of Public Utilities

Job Title: Deputy Director II

Dates Employed From: Apr/2011
Dates Employed To: Feb/2015
Employment Length: 3 years, 10 months

Duties: Oversaw the daily operation and management of five divisions that included the 132mgd water purification plant; The 75+mgd wastewater treatment plant; The combine sewer Collection System & Stormwater Maintenance groups; The Water Distribution System Group; and The Water Resources, stormwater management, and pre-treatment program group. Provided leadership and direction for the development, implementation, administration, and operations of various systems, plans, and projects. Protected the health & safety of the community and the environment by providing sound wastewater services through pumping, transport, and treatment of wastewater generated by residential, commercial, and industrial customers. Complied with all Federal and State regulatory requirements to ensure the protection of the publics health and the safety of the community and environment.

Reason For Leaving: Needed to relocate to be closer to family.

Supervisor Name: Robert Steidel

Address: 730 E. Broad Street Richmond, VA, UNITED STATES
Phone: 804-646-5727

Starting Rate of Pay: $120,000.00 (Salary)
Ending Rate of Pay: $122,400.00 (Salary)

May We Contact? Yes

City of Houston Department of Public Works & Engineering

Job Title: Assistant Director of Wastewater Operations

Supervisor Name: Mr. Jun Chang

Dates Employed From: Feb/2004
Dates Employed To: Jul/2010
Employment Length: 6 years, 5 months

Address:611 Walker Street Houston, TX, UNITED STATES
Phone: (832) 395-2788

Starting Rate of Pay: $108,000.00 (Salary)
Ending Rate of Pay: $120,000.00 (Salary)

May We Contact? Yes

Duties: Oversees the day-to-day operations of 420+ lift stations, 39 wastewater treatment facilities with a total permitted capacity of 564MGD and an average daily flow of 250MGD, Automation (SCADA) & Electrical Systems, Collection System Maintenance, and Maintenance Management function (predictive & preventative) with an operating budget of approximately $100 Million and 500+ positions to provide service to a population of over 2 million people. • Provide leadership for the direction, development, implementation, administration and operations of various systems, plans and projects. • Protect the health & safety of the community and the environment by providing wastewater services through pumping, transport and treatment of wastewater generated by residential, commercial and industrial customers. • Comply with all federal and state regulatory requirements to protect the health and safety of the community and the environment.

Reason For Leaving: I had become dissatisfied with the direction I was being given for my organization and choose to resign

Metropolitan St. Louis Sewer District

Job Title: Executive Director/CEO

Supervisor Name: Board of Trustees

Dates Employed From: Sep/1999
Dates Employed To: Sep/2002
Employment Length: 3 years

Address:2350 Market Street St. Louis , MO, UNITED STATES
Phone: 314-768-6260

Starting Rate of Pay: $165,000.00 (Salary)
Ending Rate of Pay: $187,500.00 (Salary)

May We Contact? Yes

Duties: • Administered all programs to serve and protect a community of over 1.5 million people, 92 municipalities, a territory of 524 square miles and the environment by providing effective and efficient Stormwater, Wastewater, combine sewer collection systems (approximately 8500 miles) and 10 treatment facilities with a total permitted capacity of over 800MGD. • Provided leadership to 904-employee. • Managed an annual budget of $261 million (operating and capital). • Implemented the policies, goals, objectives and mission of the District as established by a six member Board of Trustees. • Served as the District's liaison to community groups, political bodies and other governmental agencies (i.e. state and federal levels for favorable legislation and increased funding). • Kept Trustees advised of operations via meetings, presentations and written reports, with an eye toward continuous improvement of customer service delivery. • Successfully improved operational performance and efficiencies while experiencing annual savings of approximately $10 Million.

Reason For Leaving: My contract expired

Broward County - Department of Public Works

Job Title: Director

Supervisor Name: Richard Brossard - Retired

Dates Employed From: May/1993
Dates Employed To: Aug/1999
Employment Length: 6 years, 3 months

Duties: Administered all programs designed to provide an efficient, and environmentally sound water and wastewater system for the 1.5 million residents of Broward County. • Was responsible for 467 personnel agency with four divisions and two support units. • Articulated the agency's interest before the county commission, other governmental bodies, community groups and the public in general. • Received commission recognition for implementing performance measures and cost efficiencies that served as the prototype for other county agencies and resulted in saving the agency and stakeholders over $5 Million annual. • Implemented and managed the $500 Million Neighborhood Improvement Project, a major capital/economic redevelopment initiative encompassing the unincorporated areas of Broward County. In addition to infrastructure improvements, the project also included extensive community outreach and citizen participation to a diverse ethnic population. • Managed an annual budget of over $140 million

Reason For Leaving: Opportunity function as a CEO with MSD

Address:115 S. Andrews Avenue Fort Lauderdale , FL, UNITED STATES
Phone: (954) 357-6437

Starting Rate of Pay: $80,000.00 (Salary)
Ending Rate of Pay: $110,000.00 (Salary)

May We Contact? Yes

City of San Antonio Department of Environmental Management (later it becomes a part of SAWS)

Job Title: Assistant Director

Dates Employed From: Oct/1990
Dates Employed To: Feb/1992
Employment Length: 1 year, 4 months

Duties: Administered the City's Wastewater Management Program by providing guidance and direction of activities for four of five divisions within the Department. • Responsible for 400 of the 687 personnel agency. • Managed an annual budget of approximately $80 million with assets over $800 million. • Implemented the Capital Improvement Program (averaging approximately $40 million per year). • Provided guidance in maintaining over 4,100 miles of sanitary sewer collection mains and 120 lift stations with a total permitted capacity of 160MGD. • Provided all laboratory support for the city owned treatment plants. In addition, ensured that the Industrial Waste Monitoring Compliance Program was administered in accordance with City ordinances as well as state and federal environmental regulations. PLEASE NOTE: May 1992, the City Council voted to merge the Department of Wastewater Management with the City Water Board, creating the San Antonio Water System.

Reason For Leaving: Opportunity in South Florida

Supervisor Name: Joe Aceves - Retired

Address:2800 US HWY 281 North San Antonio , TX, UNITED STATES
Phone: 210-704-7297

Starting Rate of Pay: $55,900.00 (Salary)
Ending Rate of Pay: $65,000.00 (Salary)

May We Contact? Yes

City of San Antonio Department of Public Works

Job Title: Special Projects Engineer

Dates Employed From: Apr/1986
Dates Employed To: Feb/1990
Employment Length: 3 years, 10 months

Duties: • Managed the design of all Capital Improvement Programs (street and storm drainage projects) that were prepared by consulting engineering firms from throughout the City. • Total workload averaged approximately 200 projects yearly,

Supervisor Name: Frank Vage - Retired

Address:100 Military Plaza San Antonio , TX, UNITED STATES
Phone: 210-207-6000

ranging from $60 thousand to over $15 million, with a volume total of approximately $700 million for FY 1987/1988. • Coordinated with other utilities (i.e., City Water Board, City Public Service, Southwestern Bell, Paragon Cable) and other agencies in the design of projects

Reason For Leaving: Promotion with the City

Starting Rate of Pay: $30,000.00 (Salary)
Ending Rate of Pay: $40,000.00 (Salary)

May We Contact? Yes

City of San Antonio Department of Environmental Management

Job Title: Operations Engineer

Dates Employed From: Aug/1983
Dates Employed To: Aug/1986
Employment Length: 3 years

Duties: • Managed the in-house Capital Improvement Program design of all sewer extensions, sewer main relocation's, outfall sewers, treatment plant projects, and emergency rehabilitation projects. • Managed the projects prepared by consulting engineering firms. Total workload averaged 160 projects yearly with a range of $20 thousand to over $2.5 million, with an annual budget of approximately $65 million. • Managed a Staff of 24 employees consisting of 10 engineering technicians, 5 drafting technicians, 3 party chiefs, and 9 surveying aides.

Reason For Leaving: Promotion with the City

Supervisor Name: Harvey Kunze -Retire

Address:100 Military Plaza San Antonio , TX, UNITED STATES
Phone: 210-207-6000

Starting Rate of Pay: $25,000.00 (Salary)
Ending Rate of Pay: $30,000.00 (Salary)

May We Contact? Yes

Curtis Neal & Associates Engineering Firm

Job Title: Design Engineer

Dates Employed From: Aug/1981
Dates Employed To: Aug/1983
Employment Length: 2 years

Duties: • Provided design for 10 sanitary sewer projects totaling $4 million with a total distance of 9.5 miles of City of San Antonio real estate; and one storm sewer line for the San Antonio Zoo. • Provided the layout of a two-mile run of water mains for the San Antonio Water Board.

Reason For Leaving: Got a job offer from the City of San Antonio

Supervisor Name: Mr. Curtis Neal

Address:NO LONGER IN BUSINESS San Antonio, TX, UNITED STATES
Phone: 210-523-2137

Starting Rate of Pay: $18,000.00 (Salary)
Ending Rate of Pay: $18,000.00 (Salary)

May We Contact? No

Education

Please list all schools including high schools, colleges, trade schools or military.

Prairie View A&M University | College or University

Degree: Bachelor's in Civil Engineering
Major:
Location: Prairie View, TX

Graduated? Yes

Brackenridge High School | High School or Equivalent

Degree:
Major:
Location: San Antonio, TX

Graduated? Yes

Documents

You can provide us with your resume here and/or other supporting documents. You may either upload a file containing a formatted version, or cut & paste a text version in the space provided.

Click on the link to open the resume file if you wish to print the formatted resume.

File Name	Link
Willie R. Horton DD 214.pdf	Download
Willie R. Horton Degree.pdf	Download
Willie R. Horton Degree.pdf	Download
Willie R. Horton Resume.docx	Download

Text Only Resume

No Text Only Resume on File

Admin Uploaded Files

There are no admin uploaded files for this applicant.

Job Questions

UTILITY DISTRICT EXECUTIVE DIRECTOR | Score Total - 50

Question	Answer	Score	Disqualifier?
Do you have a Bachelor's Degree in Civil Engineering, Environmental Engineering, or in a related field from an accrediated college or unversity? *	Yes	15	
Do you have seven (7) years of experience in water, wastewater or public works setting to include five (5) years in a management capacity with responsibility for a large division within a public utility, or any equivalent combination of training and experiences? *	No	0	X
If you do have prior management experience, how many team members have you been responsible for managing? *	More than 50 people	0	
	More than 5 years	15	

How many years of experience do you have using the Microsoft Office suite of computer software applications (including MS Word, Excel and PowerPoint)? *		
Have you completed any post-secondary education in a related field and, if so, what is the highest level completed? *	Yes, I have completed a university or college degree or higher in a related field	15
Do you currently live in or near the city where this position is based or would you be willing to relocate there? *	I am willing to relocate to there	5

Additional Questions

Background Information | Score Total - 0

Question	Answer	Score	Disqualifier?
Were you previously employed by us? *	No	0	
If so, when?	N/A		
Are you a citizen of the United States? *	Yes	0	
If no, are you authorized to work in the U.S.A.?			
Will you, now or in the future, require sponsorship of employment visa status (e.g., H-1 B visa status) *	No	0	
Have you been convicted of a felony or served time? * *(Archived)*	No	0	
If yes, please provide explanation below. A conviction will not necessarily bar you from employment. FALSE STATEMENTS OR OMISSIONS OF CONVICTIONS SHALL BE JUST CAUSE FOR DISQUALIFICATION FROM EMPLOYMENT. Each case is evaluated in relation to the duties and responsibilities of the position for which you have applied. Details: *(Archived)*	N/A		
State names of any relatives and friends presently employed with us, indicate relationship: *	None.		

Job-Related Skills | Score Total - 0

Note: Do not fill out any part of the section you believe to be non-job related.

Question	Answer	Score	Disqualifier?

List languages in which you are fluent:	English only.	
If the job requires, do you have the appropriate valid driver's license? *	Yes	0
DL#:		
Type:		
State:		
Have you had any moving violations? *	No	0
If yes, please describe:	N/A	
Please list any other skills, licenses or certificates that may be job related or that you feel would be of value to this job or company:	I do have an expired Professional Engineering license from the State of Texas #58176 (Expired June 30, 2015). Can renew, if needed.	
If applying for clerical position, indicate typing speed (WPM):	N/A	
Do you have or possess basic computer skills? *	Yes	0
What types of computer software can you operate?	MS Excel, MS Word, PowerPoint, and Spreadsheet.	
Do you have any physical condition which might limit your ability to perform the job for which you are applying? *	No	0
If "Yes", Describe this condition and how you can perform the job in spite of it.	N/A	

Military | Score Total - 0

Question	Answer	Score	Disqualifier?
Did you serve in the U.S. Armed Forces? *	Yes	0	
If yes, in what branch?	U. S. Army		
Describe any training received relevant to the position for which you are applying:	From a leadership prospective, I am a commissioned officer (Major retired). I have had both the Engineer officer basic course training and the advance engineering training, as well as basic and advance training as a Civil Affairs officers. I also completed 50% of the Army War college.		

Certification and Release

I certify that I have read and understand the applicant instructions on the first page of this form and that the answers given by me to the foregoing questions and the statements, made by me are complete and true to the best of my knowledge and

belief. I understand that any false information, omissions, or misrepresentations of facts asked for in this application may result in rejection of my application or discharge at anytime during my employment.

I authorize the City and/or its agents to verify obtain any of this information relating to my background, including, but not limited to, credit history, criminal history, and motor vehicle driving records. In this regard, while the City does not inquire into criminal history at the application phase, all individuals receiving a conditional offer of employment will be subject to a criminal history background check.

I authorize all persons, schools, companies, and law enforcement authorities to release any information concerning my background and hereby release any said persons, schools, companies, and law enforcement authorities from any liability for any damage whatsoever for issuing this information. I also understand that the use of illegal drugs is prohibited during employment. As permitted by applicable law, a medical examination, including drug screening, will be required by the City, at the City's expense.

I understand that any offer of employment will be conditional on successful completion of such medical examination, drug screening, and background examination. To the extent that I am subject to a medical examination, I agree to sign a release of medical information in connection with this such medical examination, and I understand that the results thereof relating to my capacity to perform as a City employee will be communicated to the City. I understand and agree that this release to verify information relating to my background will continue throughout my employment, if ultimately hired by the City.

✓ I agree to the above.
Signature: Willie R. Horton
Date: 29-Sep-2016
IP Address: 24.73.208.182

Loucraft, Maria

Riviera Beach
FLORIDA

Employment Application | Submitted: 19-Sep-2016

Maria Loucraft

UTILITY DISTRICT EXECUTIVE DIRECTOR

Job Location - Riviera Beach, FL
Department - Executive
Source - Indeed

Employment History

Please give accurate, complete full-time and part-time employment record. Start with your present or most recent employer for the last seven years working backwards. RESUMES MAY BE SUBMITTED IN ADDITION TO, BUT NOT IN PLACE OF ANY PORTION OF THE APPLICATION.

City of Pompano Beach Utilities

Job Title: Utility Compliance & Efficiency Manager

Dates Employed From: Aug/2012
Dates Employed To: Sep/2016
Employment Length: 4 years, 1 month

Duties: Manage Utility Compliance, Safety, Strategic Planning, Lean/6 sigma process improvement, Reuse connection program, Conservation & Public Outreach, Assist with Budgeting and Rates, Stormwater compliance and serve as back up to Utilities Director. Utilities include Drinking water plants, wastewater collections, Reuse Plant, Water and Reuse Distribution and Stormwater.

Reason For Leaving: Currently Employed

Supervisor Name: Randy Brown

Address: 1205 NE 5th Avenue Pompano Beach, FL, UNITED STATES
Phone: (561) 951-4294

Starting Rate of Pay: 79,884 (Salary)
Ending Rate of Pay: 98,702 (Salary)

May We Contact? Yes

City of Pompano Beach Utilities

Job Title: Laboratory Manager

Dates Employed From: Oct/2003
Dates Employed To: Aug/2012
Employment Length: 8 years, 10 months

Duties: Laboratory Manager responsible for field sampling and laboratory units, safety, water conservation, outreach, grants, water supply, reuse program, and regulatory compliance.

Reason For Leaving: Promotion to newly created position

Supervisor Name: Randy Brown

Address: 1205 NE 5th Avenue Pompano Beach, FL, UNITED STATES
Phone: (954) 545-7004

Starting Rate of Pay: 50,000 (Salary)
Ending Rate of Pay: 79,884 (Salary)

May We Contact? Yes

International Analytical Group

Job Title: Division Manager

Dates Employed From: Oct/2002
Dates Employed To: Oct/2003
Employment Length: 1 year

Duties: Quality Assurance Consultant providing data integrity training, data validation, writing quality assurance documents and preparing laboratories for NELAC inspections.

Reason For Leaving: Not enough work

Supervisor Name: Marino Fernandez

Address: 3450 Executive Way Miramar, FL, UNITED STATES
Phone: (954) 499-3269

Starting Rate of Pay: 40,000 (Salary)
Ending Rate of Pay: 40,000 (Salary)

May We Contact? Yes

Palm Beach County Utilities Laboratory

Job Title: Chemist

Dates Employed From: Mar/2002
Dates Employed To: Apr/2002
Employment Length: 0 years, 1 month

Duties: Nutrient analysis and Field Section Supervisor. Also analyzed water samples for nutrients via Rapid Flow and Injection Analyzers.

Reason For Leaving: Illness in faily

Supervisor Name: Yaya Navani

Address: 13026 Jog Road Delray Beach, FL, UNITED STATES
Phone: (561) 638-5040

Starting Rate of Pay: 35,796 (Salary)
Ending Rate of Pay: 35,796 (Salary)

May We Contact? Yes

South Florida Water Management District

Job Title: Supervising Professional- QA

Dates Employed From: Mar/1992
Dates Employed To: Oct/1997
Employment Length: 5 years, 7 months

Duties: Managed the Water Quality Monitoring Quality Assurance Unit and Safety Program for laboratory and Field Sampling. Supervised 11 including data unit. Conducted lab and field audits, prepared QA documents, validated data, prepared reports and was QA officer for high profile projects.

Reason For Leaving: Family Responsibility

Supervisor Name: Maxine Cheesman

Address: 1480-9 Skees Road West Palm Beach, FL, UNITED STATES
Phone: (561) 681-2500

Starting Rate of Pay: 32,000 (Salary)
Ending Rate of Pay: 57,000 (Salary)

May We Contact? Yes

Education

Please list all schools including high schools, colleges, trade schools or military.

University of South Florida | College or University

Degree: BS in Chemistry
Major:
Location: Tampa, FL

Graduated? Yes

Florida Atlantic University | College or University

Degree: Lean/6 Sigma Greenbelt Certificate
Major:
Location: Boca Raton, FL

Graduated? Yes

Mercer University | College or University

Degree: NA - attended two years before University of South Florida
Major:
Location: Macon, GA

Graduated? No

Twin Lakes High School | High School or Equivalent

Degree:
Major:
Location: West Palm Beach, FL

Graduated? Yes

Michigan State University | Certification

Degree: Supervisory Management in the Water/Wastewater Field Certificate
Major:
Location: Lansing, MI

Graduated? Yes

California State University | Certification

Degree: Water Treatment Plant Operation I, II and Water Distribution Certificates
Major:
Location: Sacramento, CA

Graduated? Yes

Buried Asset Management Institute- International | Certification

Degree: Overview of Asset Management Training Program - Certificate
Major:
Location: Louisiana, LA

Graduated? Yes

Documents

You can provide us with your resume here and/or other supporting documents. You may either upload a file containing a formatted version, or cut & paste a text version in the space provided.

Click on the link to open the resume file if you wish to print the formatted resume.

File Name	Link
University Diploma - Maria Loucraft.pdf	Download

Maria_Loucraft_2014-2015_accomplishments _1_.doc	Download
Maria Loucraft - Resume August 2016.docx	Download
LSS Greenbelt Certificate- Maria Loucraft.pdf	Download

Text Only Resume

No Text Only Resume on File

Admin Uploaded Files

There are no admin uploaded files for this applicant.

Job Questions

UTILITY DISTRICT EXECUTIVE DIRECTOR | Score Total - 45

Question	Answer	Score	Disqualifier?
Do you have a Bachelor's Degree in Civil Engineering, Environmental Engineering, or in a related field from an accrediated college or unversity? *	Yes	15	
Do you have seven (7) years of experience in water, wastewater or public works setting to include five (5) years in a management capacity with responsibility for a large division within a public utility, or any equivalent combination of training and experiences? *	Yes	0	
If you do have prior management experience, how many team members have you been responsible for managing? *	More than 50 people	0	
How many years of experience do you have using the Microsoft Office suite of computer software applications (including MS Word, Excel and PowerPoint)? *	More than 5 years	15	
Have you completed any post-secondary education in a related field and, if so, what is the highest level completed? *	Yes, I have completed a certificate or diploma in a related field	10	
Do you currently live in or near the city where this position is based or would you be willing to relocate there? *	I am willing to relocate to there	5	

Additional Questions

Background Information | Score Total - 0

Question	Answer	Score	Disqualifier?
Were you previously employed by us? *	No	0	
If so, when?	N/A		
Are you a citizen of the United States? *	Yes	0	
If no, are you authorized to work in the U.S.A.?			
Will you, now or in the future, require sponsorship of employment visa status (e.g., H-1 B visa status) *	No	0	
Have you been convicted of a felony or served time? * *(Archived)*	No	0	
If yes, please provide explanation below. A conviction will not necessarily bar you from employment. FALSE STATEMENTS OR OMISSIONS OF CONVICTIONS SHALL BE JUST CAUSE FOR DISQUALIFICATION FROM EMPLOYMENT. Each case is evaluated in relation to the duties and responsibilities of the position for which you have applied. Details: *(Archived)*	N/A		
State names of any relatives and friends presently employed with us, indicate relationship: *	N/A		

Job-Related Skills | Score Total - 0

Note: Do not fill out any part of the section you believe to be non-job related.

Question	Answer	Score	Disqualifier?
List languages in which you are fluent:	Spanish		
If the job requires, do you have the appropriate valid driver's license? *	Yes	0	
DL#:			
Type:			
State:			
Have you had any moving violations? *	No	0	
If yes, please describe:	N/A		
Please list any other skills, licenses or certificates that may be job related or that you feel would be of value to this job or company:	Currently enrolled in Lean/6 Sigma Blackbelt course at FAU. Skilled in Regulatory Compliance, Water Supply Development/Planning, Utility Management, Rates and Budgeting, Staff Development, Process Improvement,		

	Strategic Planning, Safety, Grants, Legislative and Regulatory participation, Backflow & Cross Connection Programs, Reuse Programs, Water Conservation, Customer Outreach and Benchmarking.	
If applying for clerical position, indicate typing speed (WPM):	N/A	
Do you have or possess basic computer skills? *	Yes	0
What types of computer software can you operate?	Microsoft programs, Minitab statistical software, Laboratory Information Management Systems, City financial software (HTE)	
Do you have any physical condition which might limit your ability to perform the job for which you are applying? *	No	0
If "Yes", Describe this condition and how you can perform the job in spite of it.		

Military | Score Total - 0

Question	Answer	Score	Disqualifier?
Did you serve in the U.S. Armed Forces? *	No	0	
If yes, in what branch?			
Describe any training received relevant to the position for which you are applying:			

Certification and Release

I certify that I have read and understand the applicant instructions on the first page of this form and that the answers given by me to the foregoing questions and the statements, made by me are complete and true to the best of my knowledge and belief. I understand that any false information, omissions, or misrepresentations of facts asked for in this application may result in rejection of my application or discharge at anytime during my employment.

I authorize the City and/or its agents to verify obtain any of this information relating to my background, including, but not limited to, credit history, criminal history, and motor vehicle driving records. In this regard, while the City does not inquire into criminal history at the application phase, all individuals receiving a conditional offer of employment will be subject to a criminal history background check.

I authorize all persons, schools, companies, and law enforcement authorities to release any information concerning my background and hereby release any said persons, schools, companies, and law enforcement authorities from any liability for any damage whatsoever for issuing this information. I also understand that the use of illegal drugs is prohibited during employment. As permitted by applicable law, a medical examination, including drug screening, will be required by the City, at the City's expense.

I understand that any offer of employment will be conditional on successful completion of such medical examination, drug screening, and background examination. To the extent that I am subject to a medical examination, I agree to sign a release of

medical information in connection with this such medical examination, and I understand that the results thereof relating to my capacity to perform as a City employee will be communicated to the City. I understand and agree that this release to verify information relating to my background will continue throughout my employment, if ultimately hired by the City.

☑ I agree to the above.

Signature: Maria Victoria Loucraft

Date: 19-Sep-2016

IP Address: 99.36.251.12

Muse, Walter

Riviera Beach
FLORIDA

Employment Application | Submitted: 14-Jun-2016

Walter Muse

UTILITY DISTRICT EXECUTIVE DIRECTOR

Job Location - Riviera Beach, FL
Department - Executive
Source - Florida League of Cities

Employment History

Please give accurate, complete full-time and part-time employment record. Start with your present or most recent employer for the last seven years working backwards. RESUMES MAY BE SUBMITTED IN ADDITION TO, BUT NOT IN PLACE OF ANY PORTION OF THE APPLICATION.

City of Ocala

Job Title: Assistant Director

Dates Employed From: Dec/1995
Dates Employed To: Jun/2016
Employment Length: 20 years, 6 months

Duties: Executive management of Operations, Maintenance, Engineering, Laboratory and Industrial Pre-treatment within the City of Ocala's Water Resources Department.

Reason For Leaving: Currently Employed

Supervisor Name: Jeff Halcomb

Address: 1805 NE 30th Ave Ocala, FL, UNITED STATES
Phone: (352) 351-6772

Starting Rate of Pay: 18.00 (Salary)
Ending Rate of Pay: 47.35 (Salary)

May We Contact? Yes

Education

Please list all schools including high schools, colleges, trade schools or military.

Nova Southeastern University | College or University

Degree: MBA
Major:
Location: Fort Lauderdale, FL

Graduated? Yes

Southern Illinois University | College or University

Degree: Bachelors in Electrical and Electronics

Graduated? Yes

Major:

Location: Carbondale, IL

Documents

You can provide us with your resume here and/or other supporting documents. You may either upload a file containing a formatted version, or cut & paste a text version in the space provided.

Click on the link to open the resume file if you wish to print the formatted resume.

File Name	Link
Utilities Director City of Riviera Beach.docx	Download

Text Only Resume

No Text Only Resume on File

Admin Uploaded Files

There are no admin uploaded files for this applicant.

Job Questions

UTILITY DISTRICT EXECUTIVE DIRECTOR | Score Total - 50

Question	Answer	Score	Disqualifier?
Do you have a Bachelor's Degree in Civil Engineering, Environmental Engineering, or in a related field from an accrediated college or unversity? *	Yes	15	
Do you have seven (7) years of experience in water, wastewater or public works setting to include five (5) years in a management capacity with responsibility for a large division within a public utility, or any equivalent combination of training and experiences? *	Yes	0	
If you do have prior management experience, how many team members have you been responsible for managing? *	More than 50 people	0	
How many years of experience do you have using the Microsoft Office suite of computer software applications (including MS Word, Excel and PowerPoint)? *	More than 5 years	15	
	Yes, I have completed a university or college degree or higher in a related field	15	

Have you completed any post-secondary education in a related field and, if so, what is the highest level completed? *		
Do you currently live in or near the city where this position is based or would you be willing to relocate there? *	I am willing to relocate to there	5

Additional Questions

Background Information | Score Total - 0

Question	Answer	Score	Disqualifier?
Were you previously employed by us? *	No	0	
If so, when?	NA		
Are you a citizen of the United States? *	Yes	0	
If no, are you authorized to work in the U.S.A.?	Yes	0	
Will you, now or in the future, require sponsorship of employment visa status (e.g., H-1 B visa status) *	No	0	
Have you been convicted of a felony or served time? * *(Archived)*	No	0	
If yes, please provide explanation below. A conviction will not necessarily bar you from employment. FALSE STATEMENTS OR OMISSIONS OF CONVICTIONS SHALL BE JUST CAUSE FOR DISQUALIFICATION FROM EMPLOYMENT. Each case is evaluated in relation to the duties and responsibilities of the position for which you have applied. Details: *(Archived)*	NA		
State names of any relatives and friends presently employed with us, indicate relationship: *	NA		
I have uploaded the required drivers license, educational certificates and DD214, etc. in the Document section. * *(Archived)*	Yes	0	

Job-Related Skills | Score Total - 0

Note: Do not fill out any part of the section you believe to be non-job related.

Question	Answer	Score	Disqualifier?
List languages in which you are fluent:	English		

If the job requires, do you have the appropriate valid driver's license? *	Yes	0
DL#:		
Type:		
State:		
Have you had any moving violations? *	Yes	0
If yes, please describe:	Speeding	
Please list any other skills, licenses or certificates that may be job related or that you feel would be of value to this job or company:	Leadership Ocala/Marion NIGP CPPO State of Florida Certified Public Manager	
If applying for clerical position, indicate typing speed (WPM):	NA	
Do you have or possess basic computer skills? *	Yes	0
What types of computer software can you operate?	Microsoft Office Suite	
Do you have any physical condition which might limit your ability to perform the job for which you are applying? *	No	0
If "Yes", Describe this condition and how you can perform the job in spite of it.	NA	

Military | Score Total - 0

Question	Answer	Score	Disqualifier?
Did you serve in the U.S. Armed Forces? *	Yes	0	
If yes, in what branch?	Navy		
Describe any training received relevant to the position for which you are applying:	Utilities		

Certification and Release

I certify that I have read and understand the applicant instructions on the first page of this form and that the answers given by me to the foregoing questions and the statements, made by me are complete and true to the best of my knowledge and belief. I understand that any false information, omissions, or misrepresentations of facts asked for in this application may result in rejection of my application or discharge at anytime during my employment.

I authorize the City and/or its agents to verify obtain any of this information relating to my background, including, but not limited to, credit history, criminal history, and motor vehicle driving records. In this regard, while the City does not inquire into criminal history at the application phase, all individuals receiving a conditional offer of employment will be subject to a criminal history background check.

I authorize all persons, schools, companies, and law enforcement authorities to release any information concerning my background and hereby release any said persons, schools, companies, and law enforcement authorities from any liability for any damage whatsoever for issuing this information. I also understand that the use of illegal drugs is prohibited during employment. As permitted by applicable law, a medical examination, including drug screening, will be required by the City, at the City's expense.

I understand that any offer of employment will be conditional on successful completion of such medical examination, drug screening, and background examination. To the extent that I am subject to a medical examination, I agree to sign a release of medical information in connection with this such medical examination, and I understand that the results thereof relating to my capacity to perform as a City employee will be communicated to the City. I understand and agree that this release to verify information relating to my background will continue throughout my employment, if ultimately hired by the City.

☑ I agree to the above.

Signature: Walter Darryl Muse

Date: 14-Jun-2016

IP Address: 72.238.178.67

Nocera, Joseph

Riviera Beach
FLORIDA

Employment Application | Submitted: 17-Oct-2016

Joseph Nocera

UTILITY DISTRICT EXECUTIVE DIRECTOR

Job Location - Riviera Beach, FL
Department - Executive
Source - LinkedIn - apply

Employment History

Please give accurate, complete full-time and part-time employment record. Start with your present or most recent employer for the last seven years working backwards. RESUMES MAY BE SUBMITTED IN ADDITION TO, BUT NOT IN PLACE OF ANY PORTION OF THE APPLICATION.

Shaw stone & webster inc

Job Title: Vp & director business development nuclear services

Dates Employed From: Jul/2006
Dates Employed To: Jan/2016
Employment Length: 9 years, 6 months

Duties: Vice President

Reason For Leaving: Laid Off

Supervisor Name: Donald DePierro

Address: 128 Tryon Street Charlotte, NC, UNITED STATES
Phone: 980 321 8917

Starting Rate of Pay: $165,000 (Salary)
Ending Rate of Pay: $260,000 (Salary)

May We Contact? Yes

Commissioning, power group

Job Title: Chicago bridge & iron - vp & director

Dates Employed From: Jul/2006
Dates Employed To: Jan/2016
Employment Length: 9 years, 6 months

Duties: Vice President of Utility Services and VP and director of commissioning of Electric Power Plants

Reason For Leaving: Laid Off

Supervisor Name: Donald DePierro

Address: 128 Tryon Street Charlotte, NC, UNITED STATES
Phone: 980 321 8917

Starting Rate of Pay: $165,000 (Salary)
Ending Rate of Pay: $260,000 (Salary)

May We Contact? Yes

Encorp inc

Job Title: Vice president & regional manager

Dates Employed From: Feb/2003
Dates Employed To: Mar/2004
Employment Length: 1 year, 1 month

Duties: Regional Director and manager of 20 Employees

Reason For Leaving: New Opportunity

Supervisor Name: Greg Nolan

Address: Kodak Drive Windsor, CO, UNITED STATES
Phone: 856-296-8968

Starting Rate of Pay: $135,000
Ending Rate of Pay: $140,000

May We Contact? No

Concord engineering group

Job Title: Executive vp

Dates Employed From: Jan/2001
Dates Employed To: Feb/2003
Employment Length: 2 years, 1 month

Duties: Operations Manager for 60 MEP design engineerinf firm

Reason For Leaving: New Opportunity

Supervisor Name: Mike Fischetti

Address:29 Burnt Mill Road Voorhees, NJ, UNITED STATES
Phone: 856-482-3000

Starting Rate of Pay: $100,000 (Salary)
Ending Rate of Pay: $120,000 (Salary)

May We Contact? Yes

Law gibb group

Job Title: Vice president northeast

Dates Employed From: Jan/2000
Dates Employed To: Feb/2001
Employment Length: 1 year, 1 month

Duties: Northeast Regional Mgr managing 6 offices and 60 people

Reason For Leaving: Laid Off

Supervisor Name: Mike Montgomery

Address:10 th Street Alpharetta, GA, UNITED STATES
Phone: 856-296-8968

Starting Rate of Pay: $100,000 (Salary)
Ending Rate of Pay: $120,000 (Salary)

May We Contact? Yes

S&W Advisory operations dept

Job Title: regional manager

Dates Employed From: Oct/1980
Dates Employed To: Oct/2000
Employment Length: 20 years

Duties: Manager of the Test Engineering Dept

Reason For Leaving: New Opportunity

Supervisor Name: Charles Costanza

Address:3 Executive Campus Cherry Hill, NJ, UNITED STATES
Phone: 856-482-3000

Starting Rate of Pay: $100,000 (Salary)
Ending Rate of Pay: $120,000 (Salary)

May We Contact? Yes

S&W *Business development dept

Job Title: Lead contract negotiations and financing arrangements for multimillion dollar sales

Dates Employed From: Oct/1980
Dates Employed To: Dec/1999
Employment Length: 19 years, 2 months

Duties: Sales of new services

Reason For Leaving: New Opportunity

Supervisor Name: Charles Costanza

Address:3 Executive Campus Cherry Hill, NJ, UNITED STATES
Phone: 856-482-3000

Starting Rate of Pay: $100,000 (Salary)
Ending Rate of Pay: $120,000 (Salary)

May We Contact? Yes

Stone & Webster-Communications services group

Job Title: President

Dates Employed From: Oct/1980
Dates Employed To: Oct/1999
Employment Length: 19 years

Duties: Presdent of Division of 80 People

Reason For Leaving: New Opportunity

Supervisor Name: Charles Costanza

Address:3 Executive Campus Cherry Hill, NJ, UNITED STATES
Phone: 856-482-3000

Starting Rate of Pay: $100,000 (Salary)
Ending Rate of Pay: $120,000 (Salary)

May We Contact? Yes

Southern california edison

Job Title: Business development manager

Dates Employed From: Dec/1980
Dates Employed To: Dec/1980
Employment Length: 0 years

Duties: Construction Engineer

Reason For Leaving: New Opportunity

Supervisor Name: David Nichlos

Address:10 Power lane Rosemead , AL, UNITED STATES
Phone: 856-482-3000

Starting Rate of Pay: 18000 (Salary)
Ending Rate of Pay: 20000 (Salary)

May We Contact? No

General electric co

Job Title: Field service engineer

Dates Employed From: Dec/1980
Dates Employed To: Dec/1980
Employment Length: 0 years

Duties: Service Engineer to GE Gas and Syeam Turbines

Reason For Leaving: New Opportunity

Supervisor Name: John Legier

Address:2 Roslyn Lane Roslyn , NY, UNITED STATES
Phone: 1800 333 5000

Starting Rate of Pay: 10000 (Salary)
Ending Rate of Pay: 12000 (Salary)

May We Contact? No

Education

Please list all schools including high schools, colleges, trade schools or military.

Drexel university | Graduate School

Degree: Master of science
Major:
Location: Philadelphia, PA

Graduated? Yes

New york university | College or University

Degree: Bachelor of engineering
Major:
Location: New York, NY

Graduated? Yes

Documents

You can provide us with your resume here and/or other supporting documents. You may either upload a file containing a formatted version, or cut & paste a text version in the space provided.

Click on the link to open the resume file if you wish to print the formatted resume.

File Name	Link
84990_462501_resume.pdf	Download
Nocera8_8.docx	Download

Text Only Resume

No Text Only Resume on File

Admin Uploaded Files

There are no admin uploaded files for this applicant.

Job Questions

UTILITY DISTRICT EXECUTIVE DIRECTOR | Score Total - 60

Question	Answer	Score	Disqualifier?
Do you have a Bachelor's Degree in Civil Engineering, Environmental Engineering, or in a related field from an accrediated college or unversity? *	Yes	15	
Do you have seven (7) years of experience in water, wastewater or public works setting to include five (5) years in a management capacity with responsibility for a large division within a public utility, or	Yes	0	

any equivalent combination of training and experiences? *		
If you do have prior management experience, how many team members have you been responsible for managing? *	More than 50 people	0
How many years of experience do you have using the Microsoft Office suite of computer software applications (including MS Word, Excel and PowerPoint)? *	More than 5 years	15
Have you completed any post-secondary education in a related field and, if so, what is the highest level completed? *	Yes, I have completed a university or college degree or higher in a related field	15
Do you currently live in or near the city where this position is based or would you be willing to relocate there? *	Yes, I currently live there	15

Additional Questions

Background Information | Score Total - 0

Question	Answer	Score	Disqualifier?
Were you previously employed by us? *	No	0	
If so, when?			
Are you a citizen of the United States? *	Yes	0	
If no, are you authorized to work in the U.S.A.?			
Will you, now or in the future, require sponsorship of employment visa status (e.g., H-1 B visa status) *	No	0	
Have you been convicted of a felony or served time? * *(Archived)*	No	0	
If yes, please provide explanation below. A conviction will not necessarily bar you from employment. FALSE STATEMENTS OR OMISSIONS OF CONVICTIONS SHALL BE JUST CAUSE FOR DISQUALIFICATION FROM EMPLOYMENT. Each case is evaluated in relation to the duties and responsibilities of the position for which you have applied. Details: *(Archived)*			
State names of any relatives and friends presently employed with us, indicate relationship: *	None		

Job-Related Skills | Score Total - 0

Note: Do not fill out any part of the section you believe to be non-job related.

Question	Answer	Score	Disqualifier?
List languages in which you are fluent:			
If the job requires, do you have the appropriate valid driver's license? *	Yes	0	
DL#:			
Type:			
State:			
Have you had any moving violations? *	No	0	
If yes, please describe:			
Please list any other skills, licenses or certificates that may be job related or that you feel would be of value to this job or company:			
If applying for clerical position, indicate typing speed (WPM):			
Do you have or possess basic computer skills? *	Yes	0	
What types of computer software can you operate?	MS Outlook MS Word etc.		
Do you have any physical condition which might limit your ability to perform the job for which you are applying? *	No	0	
If "Yes", Describe this condition and how you can perform the job in spite of it.			

Military | Score Total - 0

Question	Answer	Score	Disqualifier?
Did you serve in the U.S. Armed Forces? *	Yes	0	
If yes, in what branch?	US Naval Reserve		
Describe any training received relevant to the position for which you are applying:	Leadership Skills		

Certification and Release

I certify that I have read and understand the applicant instructions on the first page of this form and that the answers given by me to the foregoing questions and the statements, made by me are complete and true to the best of my knowledge and belief. I understand that any false information, omissions, or misrepresentations of facts asked for in this application may result in rejection of my application or discharge at anytime during my employment.

I authorize the City and/or its agents to verify obtain any of this information relating to my background, including, but not limited to, credit history, criminal history, and motor vehicle driving records. In this regard, while the City does not inquire into criminal history at the application phase, all individuals receiving a conditional offer of employment will be subject to a criminal history background check.

I authorize all persons, schools, companies, and law enforcement authorities to release any information concerning my background and hereby release any said persons, schools, companies, and law enforcement authorities from any liability for any damage whatsoever for issuing this information. I also understand that the use of illegal drugs is prohibited during employment. As permitted by applicable law, a medical examination, including drug screening, will be required by the City, at the City's expense.

I understand that any offer of employment will be conditional on successful completion of such medical examination, drug screening, and background examination. To the extent that I am subject to a medical examination, I agree to sign a release of medical information in connection with this such medical examination, and I understand that the results thereof relating to my capacity to perform as a City employee will be communicated to the City. I understand and agree that this release to verify information relating to my background will continue throughout my employment, if ultimately hired by the City.

✓ I agree to the above.
Signature: Joseph Nocera
Date: 17-Oct-2016
IP Address: 75.74.237.224

Paul, Derrick L.

Riviera Beach
FLORIDA

Employment Application | Submitted: 11-Jun-2016

L. Derrick Paul

UTILITY DISTRICT EXECUTIVE DIRECTOR

Job Location - Riviera Beach, FL
Department - Executive
Source - City of Riviera Beach - Channel 18

Employment History

Please give accurate, complete full-time and part-time employment record. Start with your present or most recent employer for the last seven years working backwards. RESUMES MAY BE SUBMITTED IN ADDITION TO, BUT NOT IN PLACE OF ANY PORTION OF THE APPLICATION.

R. J. Hendley Christian Community School

Job Title: Teacher

Dates Employed From: Jan/2008
Dates Employed To: Jun/2016
Employment Length: 8 years, 5 months

Duties: Responsible for teaching middle school students on a range of course studies; created detailed lesson plans; managed classroom behavior; guided and directed students performance; worked with other teachers to improve teaching strategies; mentored and tutor individual students; fostered parent/teacher relationships to promote academic success.

Reason For Leaving: Currently Employed

Supervisor Name: Linda Knight

Address:2800 R J Hendley Ave Riviera Beach, FL, UNITED STATES
Phone: 561-842-1349

Starting Rate of Pay: 21,000.00 (Salary)
Ending Rate of Pay: 24,840.00 (Salary)

May We Contact? Yes

L. Derrick Paul (Self Employed)

Job Title: Real Estate Investor

Dates Employed From: Jan/2004
Dates Employed To: Jan/2008
Employment Length: 4 years

Duties: Buying and selling real estate.

Reason For Leaving: Real Estate crash

Supervisor Name: Self

Address:1069 W 28th Street Riviera Beach, FL, UNITED STATES
Phone: (561) 800-8744

Starting Rate of Pay: 30,000.00 (Salary)
Ending Rate of Pay: 20,000.00 (Salary)

May We Contact? Yes

Walmart Corporation

Job Title: Assistant Store Manager

Dates Employed From: Jan/2000
Dates Employed To: Jan/2004
Employment Length: 4 years

Duties: Managed the day to day operation of the superstore; managing the facility with up to 6 departments and 350 associates;planned, organized, assigned, and coordinated activities of staff; coached, trained and motivated staff; evaluated staff performance; administered disciplinary action to staff as needed; prepared store budget; prepared reports;monitored weekly labor reports; prepared payroll; provided excellent customer service to store guest.

Reason For Leaving: Relocated to another state

Supervisor Name: Mr.David, Store Manager

Address:3925 Pelham Rd, Greenville, SC, UNITED STATES
Phone: (864) 295-3181

Starting Rate of Pay: 28,000.00 (Salary)
Ending Rate of Pay: 38,000.00 (Salary)

May We Contact? Yes

City of Riviera Beach

Job Title: Director of Utilities

Dates Employed From: Jan/1993
Dates Employed To: Jan/1999
Employment Length: 6 years

Duties: Directed operations of water and sewer department with an annual operating budget of $8.9 million; prepared quarterly departmental updates and agenda items for City Manager's Review; attended month Council Meetings; planned, organized, assigned, and coordinated activities of staff; coached, trained and motivated staff; evaluated staff performance; administered disciplinary action to staff as needed; prepared budget; prepared reports; resolved complex issues with residents; maintained working relationships with other departments and department heads within the city to improve quality of the city management; maintained working relationships with engineers and consultants from various state and local government.

Reason For Leaving: Relocated to another state

Supervisor Name: Bill Wilkins, City Manager

Address:600 Blue Heron Blvd Riviera Beach, FL, UNITED STATES
Phone: 561-840-4873

Starting Rate of Pay: 50,000.00 (Salary)
Ending Rate of Pay: 57,000.00 (Salary)

May We Contact? Yes

City of Riviera Beach

Job Title: Assistant Director of Utilities

Dates Employed From: Jan/1983
Dates Employed To: Jan/1993
Employment Length: 10 years

Duties: Managed departmental budget; monitored annual inventory controls; investigated work related accidents and customer complaints; reviewed bids and made recommendations for equipment purchases to Director; attended month Council Meetings; planned, organized, assigned, and coordinated activities of staff; coached, trained and motivated staff; evaluated staff performance; administered disciplinary action to staff as needed; prepared budget; prepared reports; resolved complex issues with residents; maintained working relationships with other departments and department heads within the city to improve quality of the city

Supervisor Name: Jack Waldon, Director of Utilities

Address:600 W Blue Heron Blvd Riviera Beach, FL, UNITED STATES
Phone: (561) 840-4873

Starting Rate of Pay: 30,000.00 (Salary)
Ending Rate of Pay: 41,000.00 (Salary)

May We Contact? Yes

management; maintained working relationships with engineers and consultants from various state and local government.

Reason For Leaving: Promotion

Education

Please list all schools including high schools, colleges, trade schools or military.

Michigan State University | College or University

Degree: Certificate, Water & Waste Water Utility Mangement **Graduated?** Yes
Major:
Location: Lansing, MI

Lander University | College or University

Degree: Bachelor, Business Administration **Graduated?** Yes
Major:
Location: Greenwood , SC

Palm Beach Gardens, High School | High School or Equivalent

Degree: Diploma **Graduated?** Yes
Major:
Location: Palm Beach Gardens , FL

Documents

You can provide us with your resume here and/or other supporting documents. You may either upload a file containing a formatted version, or cut & paste a text version in the space provided.

Click on the link to open the resume file if you wish to print the formatted resume.

File Name	Link
Derrick Paul Resume 2.doc	Download

Text Only Resume

No Text Only Resume on File

Admin Uploaded Files

There are no admin uploaded files for this applicant.

Job Questions

UTILITY DISTRICT EXECUTIVE DIRECTOR | Score Total - 50

Question	Answer	Score	Disqualifier?
Do you have a Bachelor's Degree in Civil Engineering, Environmental Engineering, or in a related field from an accrediated college or unversity? *	Yes	15	
Do you have seven (7) years of experience in water, wastewater or public works setting to include five (5) years in a management capacity with responsibility for a large division within a public utility, or any equivalent combination of training and experiences? *	Yes	0	
If you do have prior management experience, how many team members have you been responsible for managing? *	More than 50 people	0	
How many years of experience do you have using the Microsoft Office suite of computer software applications (including MS Word, Excel and PowerPoint)? *	2 - 5 years	10	
Have you completed any post-secondary education in a related field and, if so, what is the highest level completed? *	Yes, I have completed a certificate or diploma in a related field	10	
Do you currently live in or near the city where this position is based or would you be willing to relocate there? *	Yes, I currently live there	15	

Additional Questions

Background Information | Score Total - 0

Question	Answer	Score	Disqualifier?
Were you previously employed by us? *	Yes	0	
If so, when?	1983 to 1999		
Are you a citizen of the United States? *	Yes	0	
If no, are you authorized to work in the U.S.A.?	Yes	0	
Will you, now or in the future, require sponsorship of employment visa status (e.g., H-1 B visa status) *	No	0	
Have you been convicted of a felony or served time? * *(Archived)*	No	0	
	n/a		

If yes, please provide explanation below. A conviction will not necessarily bar you from employment. FALSE STATEMENTS OR OMISSIONS OF CONVICTIONS SHALL BE JUST CAUSE FOR DISQUALIFICATION FROM EMPLOYMENT. Each case is evaluated in relation to the duties and responsibilities of the position for which you have applied. Details: *(Archived)*		
State names of any relatives and friends presently employed with us, indicate relationship: *	n/a	
I have uploaded the required drivers license, educational certificates and DD214, etc. in the Document section. * *(Archived)*	Yes	0

Job-Related Skills | Score Total - 0

Note: Do not fill out any part of the section you believe to be non-job related.

Question	Answer	Score	Disqualifier?
List languages in which you are fluent:	English		
If the job requires, do you have the appropriate valid driver's license? *	Yes	0	
DL#:			
Type:			
State:			
Have you had any moving violations? *	No	0	
If yes, please describe:	n/a		
Please list any other skills, licenses or certificates that may be job related or that you feel would be of value to this job or company:	Water and Waste Water Utility Management, Certification		
If applying for clerical position, indicate typing speed (WPM):	n/a		
Do you have or possess basic computer skills? *	Yes	0	
What types of computer software can you operate?	Microsoft Office Word, Excel, Mainframe		
Do you have any physical condition which might limit your ability to perform the job for which you are applying? *	No	0	

If "Yes", Describe this condition and how you can perform the job in spite of it.	n/a

Military | Score Total - 0

Question	Answer	Score	Disqualifier?
Did you serve in the U.S. Armed Forces? *	No	0	
If yes, in what branch?	n/a		
Describe any training received relevant to the position for which you are applying:	Over 25 years of customer service experience; over 20 years of management experience; and over 15 years of experience directing a utilities department.		

Certification and Release

I certify that I have read and understand the applicant instructions on the first page of this form and that the answers given by me to the foregoing questions and the statements, made by me are complete and true to the best of my knowledge and belief. I understand that any false information, omissions, or misrepresentations of facts asked for in this application may result in rejection of my application or discharge at anytime during my employment.

I authorize the City and/or its agents to verify obtain any of this information relating to my background, including, but not limited to, credit history, criminal history, and motor vehicle driving records. In this regard, while the City does not inquire into criminal history at the application phase, all individuals receiving a conditional offer of employment will be subject to a criminal history background check.

I authorize all persons, schools, companies, and law enforcement authorities to release any information concerning my background and hereby release any said persons, schools, companies, and law enforcement authorities from any liability for any damage whatsoever for issuing this information. I also understand that the use of illegal drugs is prohibited during employment. As permitted by applicable law, a medical examination, including drug screening, will be required by the City, at the City's expense.

I understand that any offer of employment will be conditional on successful completion of such medical examination, drug screening, and background examination. To the extent that I am subject to a medical examination, I agree to sign a release of medical information in connection with this such medical examination, and I understand that the results thereof relating to my capacity to perform as a City employee will be communicated to the City. I understand and agree that this release to verify information relating to my background will continue throughout my employment, if ultimately hired by the City.

☑ I agree to the above.
Signature: L. Derrick Paul
Date: 11-Jun-2016
IP Address: 108.193.122.91

Pena, Tinu

Riviera Beach
FLORIDA

Employment Application | Submitted: 01-Oct-2016

Tinu Pena

UTILITY DISTRICT EXECUTIVE DIRECTOR

Job Location - Riviera Beach, FL
Department - Executive
Source - Refer.io - City's Human Resources Jon Announcement

Employment History

Please give accurate, complete full-time and part-time employment record. Start with your present or most recent employer for the last seven years working backwards. RESUMES MAY BE SUBMITTED IN ADDITION TO, BUT NOT IN PLACE OF ANY PORTION OF THE APPLICATION.

Motre Co. LLC

Job Title: Principal

Dates Employed From: Feb/2014
Dates Employed To: Sep/2016
Employment Length: 2 years, 7 months

Duties: Responsible for project procurements, analyzing project and program requirements, develop conceptual and/or preliminary drawings, and prepares detailed budget estimates. Overseeing project concept and design development from inception to completion, provide a range of project management services to include scope and schedule development, cost estimating, site assessments, site observation and project close-out. Oversees the operational, planning and resource allocation processes for related projects. Facilitate contract action, proposal price analysis, and data management to support institutional historical database requirements. Lead and supervise work assigned to consultants on various types of projects such as site planning, drainage design, site layout and design calculations on projects. Communicates on a regular basis with key stakeholders on key strategic Initiatives and Projects. Manage staff's time allocation on projects to promote work efficiency and ensure conformance to budget. Review contract deliverables and cost estimates provided by other disciplines on projects and assesses technical content of Architectural/Engineering cost engineer's products and services and contract deliverables. Design and maintain reporting that measures / tracks performance of specific critical priorities. Manages the review process and secure approvals with all applicable stakeholders and vendors.

Supervisor Name: Self-employed

Address:2101 Vista Parkway, Ste 4046 West Palm Beach, FL, UNITED STATES
Phone: (561) 331-2170

Starting Rate of Pay: $60 (Per Diem)
Ending Rate of Pay: $60 (Per Diem)

May We Contact? Yes

Reason For Leaving: Currently Employed

I-595 Express, LLC

Job Title: Engineering/Permit Manager

Dates Employed From: Dec/2010
Dates Employed To: Feb/2014
Employment Length: 3 years, 2 months

Duties: Responsible for conducting site visits to track progress of construction against project schedule. Review change orders for processing in accordance to scope of work. Analyzed project financial and process status in relation to current budget. Attended weekly design and construction meetings and coordinate with construction managers. Prepared monthly progress reports and quarterly presentations for submission to upper management. Managed overall project budget. Developed content management and collaboration strategies to efficiently communicate with team members. Advised Management of the project status and problems (or potential problems) on a regular basis. Reviewed, analyzed and interpreted traffic control plans against project schedule and roadway plan to assess risk to project deliverables. Designed and maintained reporting that measures / tracks performance of specific Critical Priorities. Developed, organized and prioritized project requests within the framework of fiscal, funding, physical and other constraints. Prepare clarification packages providing detailed analysis and summary of design problems for further deliberations by project staff. Process and field verify EPC milestone pay items on a monthly basis. Managed the review process and secure approvals with all applicable stakeholders and vendors. Managed and delegated work to personnel in section. Reviewed cost estimates as it pertains to supplemental agreements between the client and contractors.

Reason For Leaving: P3 Project completed

Supervisor Name: Diana Maldonado

Address:10368 FL-84 #202 Davie, FL, UNITED STATES
Phone: 954-214-4166

Starting Rate of Pay: 70000 (Salary)
Ending Rate of Pay: 76000 (Salary)

May We Contact? Yes

IBI Group/Rhon Ernest-Jones Consulting Engineers

Job Title: Design Engineer

Dates Employed From: Sep/2007
Dates Employed To: Jul/2008
Employment Length: 0 years, 10 months

Duties: Responsible for project engineering and management. Analyzed project requirements, developed conceptual and/or preliminary drawings, and prepares detailed budget estimates on projects. Coordinated with regulatory agencies during preliminary design phase and during permitting process for conformance to design standards and regulations for quick permit processing. Prepared design reports, sketches, site assessments and performed field observation on project for conformance to construction plan and addressed field changes as required to keep project on schedule. Maintained good rapport with clients, ensuring continued business relations and Interface with different departments, engineers/architect to support project execution.

Reason For Leaving: Layoff due to economic downturn

Supervisor Name: Graham Ernest-Jones

Address:661 Maplewood Drive Jupiter, FL, UNITED STATES
Phone: (561) 253-7870

Starting Rate of Pay: 54000 (Salary)
Ending Rate of Pay: 57000 (Salary)

May We Contact? No

Miller Legg

Job Title: Project Engineer

Dates Employed From: Dec/2002
Dates Employed To: Jul/2007
Employment Length: 4 years, 7 months

Duties: Responsible for assigned land development projects to include plan production and budget maintenance. Analyzed project requirements, developed conceptual and/or preliminary drawings, and prepares detailed budget estimates on projects. Oversaw construction plans production and research and analyzed existing data to prepare drainage facility design and calculation on projects. Coordinated with other discipline to ensure consistency in design and facilitate contract action, proposal price analysis, and data management to support institutional historical database requirements. Managed staff's time allocation on projects to promote work efficiency and ensure conformance to budget. Researched documents, prepared and assembled reports and applied for regulatory permits with a 90% one-time submittal approval. Performed quality control/quality assurance on all construction plans and permit applications.

Reason For Leaving: layyoff economic downturn

Supervisor Name: Chris Holmes, P.E.

Address:2005 Vista Parkway West Palm Beach, FL, UNITED STATES
Phone: (561) 209 -7775

Starting Rate of Pay: 58000 (Salary)
Ending Rate of Pay: 59000 (Salary)

May We Contact? Yes

United States Army

Job Title: Missile Specialist Supervisor

Dates Employed From: Dec/1993
Dates Employed To: Mar/1999
Employment Length: 5 years, 3 months

Duties: Oversaw the management of the maintenance of infantry unit gunnery system to ensure combat readiness. Managed and supervised staff and delegated task to accomplished schedule maintenance of equipment. Maintained shop calibration and assigned equipment readiness at 100% at all time. Trained and counseled staff on a regular basis and performed performance review to ensure personnel professional development.

Reason For Leaving: Completed Tenure

Supervisor Name: Sgt Jackson

Address:4th Infantry Divison Colorado Springs, CO, UNITED STATES
Phone: (719) 526-5811

Starting Rate of Pay: $15,000 (Per Diem)
Ending Rate of Pay: $24,000 (Per Diem)

May We Contact? No

Education

Please list all schools including high schools, colleges, trade schools or military.

Boston Univerity | Graduate School

Degree: Master Degree, Project Management
Major:
Location: Boston, MA

Graduated? Yes

Florida Atlantic University | College or University

Degree: Bachelor Degree in Civil Engineering
Major:
Location: BOCA RATON, FL

Graduated? Yes

Palm Beach State College | College or University

Degree: Associate Degree in Architecture
Major:
Location: Lake Worth, FL

Graduated? Yes

Chaminade University | College or University

Degree: Associate Degree in Computer Science
Major:
Location: Hoonolulu, HI

Graduated? Yes

Documents

You can provide us with your resume here and/or other supporting documents. You may either upload a file containing a formatted version, or cut & paste a text version in the space provided.

Click on the link to open the resume file if you wish to print the formatted resume.

File Name	Link
TPena Driver License.pdf	Download
TPena Master Transcript.pdf	Download
TP Bachelor Transcript.pdf	Download
TP PMP Cert.pdf	Download
TP LEED AP.pdf	Download
TPena Resume.pdf	Download
Cover Letter TPena.pdf	Download

Text Only Resume

No Text Only Resume on File

Admin Uploaded Files

There are no admin uploaded files for this applicant.

Job Questions

UTILITY DISTRICT EXECUTIVE DIRECTOR | Score Total - 60

Question	Answer	Score	Disqualifier?
Do you have a Bachelor's Degree in Civil Engineering, Environmental Engineering, or in a related field from an accrediated college or unversity? *	Yes	15	
Do you have seven (7) years of experience in water, wastewater or public works setting to include five (5) years in a management capacity with responsibility for a large division within a public utility, or any equivalent combination of training and experiences? *	Yes	0	
If you do have prior management experience, how many team members have you been responsible for managing? *	Less than 50 people	0	X
How many years of experience do you have using the Microsoft Office suite of computer software applications (including MS Word, Excel and PowerPoint)? *	More than 5 years	15	
Have you completed any post-secondary education in a related field and, if so, what is the highest level completed? *	Yes, I have completed a university or college degree or higher in a related field	15	
Do you currently live in or near the city where this position is based or would you be willing to relocate there? *	Yes, I currently live there	15	

Additional Questions

Background Information | Score Total - 0

Question	Answer	Score	Disqualifier?
Were you previously employed by us? *	No	0	
If so, when?	N/A		
Are you a citizen of the United States? *	Yes	0	
If no, are you authorized to work in the U.S.A.?			
Will you, now or in the future, require sponsorship of employment visa status (e.g., H-1 B visa status) *	No	0	
Have you been convicted of a felony or served time? * *(Archived)*	No	0	
	N/A		

If yes, please provide explanation below. A conviction will not necessarily bar you from employment. FALSE STATEMENTS OR OMISSIONS OF CONVICTIONS SHALL BE JUST CAUSE FOR DISQUALIFICATION FROM EMPLOYMENT. Each case is evaluated in relation to the duties and responsibilities of the position for which you have applied. Details: *(Archived)*	
State names of any relatives and friends presently employed with us, indicate relationship: *	Terrence Bailey, PE - Acquintance

Job-Related Skills | Score Total - 0

Note: Do not fill out any part of the section you believe to be non-job related.

Question	Answer	Score	Disqualifier?
List languages in which you are fluent:	Yoruba (Nigeria)		
If the job requires, do you have the appropriate valid driver's license? *	Yes	0	
DL#:			
Type:			
State:			
Have you had any moving violations? *	No	0	
If yes, please describe:	No moving violations in the Past 3 years		
Please list any other skills, licenses or certificates that may be job related or that you feel would be of value to this job or company:	Computer Skills: Microsoft Office Suites- Word, Access, Excel, PowerPoint, Publisher, Project, AutoCAD, Cascade, ICPR. Presentation Skills, Conflict Resolution Skills, Negotiation Skills, Technical Writing Skills, Management Skills.		
If applying for clerical position, indicate typing speed (WPM):	N/A		
Do you have or possess basic computer skills? *	Yes	0	
What types of computer software can you operate?	Microsoft Office Suites- Word, Access, Excel, PowerPoint, Publisher, Project, AutoCAD, Cascade, ICPR.		
Do you have any physical condition which might limit your ability to perform the job for which you are applying? *	Yes	0	

If "Yes", Describe this condition and how you can perform the job in spite of it.	Service Connected Injury: Back injury from the Military that limit the weight of a load that I can pickup

Military | Score Total - 0

Question	Answer	Score	Disqualifier?
Did you serve in the U.S. Armed Forces? *	Yes	0	
If yes, in what branch?	US Army		
Describe any training received relevant to the position for which you are applying:	organizational and leadership skills		

Sanders, Clifford

Riviera Beach
FLORIDA

Employment Application | Submitted: 28-Nov-2016

Clifford Sanders

UTILITY DISTRICT EXECUTIVE DIRECTOR

Job Location - Riviera Beach, FL
Department - Executive
Source - City of Riviera Beach

Employment History

Please give accurate, complete full-time and part-time employment record. Start with your present or most recent employer for the last seven years working backwards. RESUMES MAY BE SUBMITTED IN ADDITION TO, BUT NOT IN PLACE OF ANY PORTION OF THE APPLICATION.

City of West Palm Beach East Central Water Reclamation Facility

Job Title: Executive Manager of Water Reclamation Services

Dates Employed From: Nov/2014
Dates Employed To: May/2016
Employment Length: 1 year, 6 months

Duties: I plan, organize, direct, evaluate, and coordinate the work of staff, consultants and contractors in the expansion, repair, operation and maintenance of the East Central Regional Wastewater Treatment Facility and Water Reclamation Facility (ECRWWTFWRF) under the direction of the City of West Palm Beach as managing agent for the ECRWWTFWRF Board.

Reason For Leaving: Currently Employed

Supervisor Name: Jeff Green

Address: 4375 Easley Drive West Palm Beach, FL, UNITED STATES
Phone: (561) 835-7406

Starting Rate of Pay: 82000/year (Salary)
Ending Rate of Pay: 89000/year (Salary)

May We Contact? Yes

City of Fort Lauderdale

Job Title: Wastewater Plant Superintendent

Dates Employed From: Feb/2004
Dates Employed To: Nov/2014
Employment Length: 10 years, 9 months

Duties: I am responsible for the Planning, Budgeting, Organizing, Staffing, Controlling, and all other Daily functions at a 55 MGD Regional Wastewater Facility for the City of Fort Lauderdale.

Supervisor Name: Miguel Arroyo

Address: 1765 S.E. 18th street Fort Lauderdale, FL, UNITED STATES
Phone: (954) 523-1002

Starting Rate of Pay: 40000/year (Salary)

Reason For Leaving: Want more responsibility

Ending Rate of Pay: 68000/year (Salary)

May We Contact? Yes

Florida Atlantic University

Job Title: Physical Chemistry Laboratory Manager/Organic Teaching Assistant

Supervisor Name: Dr. Snyder

Dates Employed From: Feb/2004
Dates Employed To: Jun/2011
Employment Length: 7 years, 4 months

Address:777 Glades rd. Boca Raton, FL, UNITED STATES
Phone: 561-297-1000

Duties: Managed all aspects of Physical Chemistry lab which included curriculum, experiments, and hiring teaching asssistants. Taught Organic chemistry Students environmental laboratory experiments and techniques.

Starting Rate of Pay: 15,000/yr (Hourly)
Ending Rate of Pay: 23,000/yr (Hourly)

Reason For Leaving: part time job, left when i had a child

May We Contact? Yes

Education

Please list all schools including high schools, colleges, trade schools or military.

Florida Atlantic University | College or University

Degree: Masters of Science in Physical Chemistry
Major:
Location: Boca Raton, FL

Graduated? Yes

Florida Atlantic University | College or University

Degree: Masters of Public Administration
Major:
Location: Boca Raton, FL

Graduated? Yes

Florida International University | College or University

Degree: Bachelors in Chemistry/Associates in Psychology
Major:
Location: Miami, FL

Graduated? Yes

Documents

You can provide us with your resume here and/or other supporting documents. You may either upload a file containing a formatted version, or cut & paste a text version in the space provided.

Click on the link to open the resume file if you wish to print the formatted resume.

File Name	Link

Masters of Science in Chemistry from FAU.pdf	Download
Bachelor of Science degree in Chemistry from FIU.pdf	Download
Driver License E.pdf	Download
clifford_sanders_cover_letter_2016 signed.pdf	Download
Clifford Sanders Resume 2016.pdf	Download

Text Only Resume

No Text Only Resume on File

Admin Uploaded Files

There are no admin uploaded files for this applicant.

Job Questions

UTILITY DISTRICT EXECUTIVE DIRECTOR | Score Total - 50

Question	Answer	Score	Disqualifier?
Do you have a Bachelor's Degree in Civil Engineering, Environmental Engineering, or in a related field from an accrediated college or unversity? *	Yes	15	
Do you have seven (7) years of experience in water, wastewater or public works setting to include five (5) years in a management capacity with responsibility for a large division within a public utility, or any equivalent combination of training and experiences? *	Yes	0	
If you do have prior management experience, how many team members have you been responsible for managing? *	More than 50 people	0	
How many years of experience do you have using the Microsoft Office suite of computer software applications (including MS Word, Excel and PowerPoint)? *	More than 5 years	15	
Have you completed any post-secondary education in a related field and, if so, what is the highest level completed? *	Yes, I have completed a university or college degree or higher in a related field	15	
Do you currently live in or near the city where this position is based or would you be willing to relocate there? *	I am willing to relocate to there	5	

Additional Questions

Background Information | Score Total - 0

Question	Answer	Score	Disqualifier?
Were you previously employed by us? *	No	0	
If so, when?	N/A		
Are you a citizen of the United States? *	Yes	0	
If no, are you authorized to work in the U.S.A.?			
Will you, now or in the future, require sponsorship of employment visa status (e.g., H-1 B visa status) *	No	0	
Have you been convicted of a felony or served time? * *(Archived)*	No	0	
If yes, please provide explanation below. A conviction will not necessarily bar you from employment. FALSE STATEMENTS OR OMISSIONS OF CONVICTIONS SHALL BE JUST CAUSE FOR DISQUALIFICATION FROM EMPLOYMENT. Each case is evaluated in relation to the duties and responsibilities of the position for which you have applied. Details: *(Archived)*	N/A		
State names of any relatives and friends presently employed with us, indicate relationship: *	None		

Job-Related Skills | Score Total - 0

Note: Do not fill out any part of the section you believe to be non-job related.

Question	Answer	Score	Disqualifier?
List languages in which you are fluent:	English		
If the job requires, do you have the appropriate valid driver's license? *	Yes	0	
DL#:			
Type:			
State:			
Have you had any moving violations? *	Yes	0	
If yes, please describe:	about 4 years ago, speeding ticket when driving through Georgia.		

Please list any other skills, licenses or certificates that may be job related or that you feel would be of value to this job or company:	ICMA member, wastewater "A" license, process mapping, Organizational Concentration in Public Administration, Project Management experience, familiar with State Regulations (F.A.C.) , Standard Methods Used in laboratories, etc	
If applying for clerical position, indicate typing speed (WPM):	55 wpm	
Do you have or possess basic computer skills? *	Yes	0
What types of computer software can you operate?	microsoft office, HACH WiMS, microsoft Visio, Lotus notes, Outlook, Oracle, KRONOS, Infor 7i (CMMS), etc	
Do you have any physical condition which might limit your ability to perform the job for which you are applying? *	No	0
If "Yes", Describe this condition and how you can perform the job in spite of it.	N/A	

Military | Score Total - 0

Question	Answer	Score	Disqualifier?
Did you serve in the U.S. Armed Forces? *	No	0	
If yes, in what branch?	N/A		
Describe any training received relevant to the position for which you are applying:	MPA degree from FAU, Utilities Management Certificate from Sacramento University, Management Training West Palm Beach, Management Training Fort Lauderdale, ISO 14001 Training, Six Sigma Yellow Belt, Process Mapping Training		

Certification and Release

I certify that I have read and understand the applicant instructions on the first page of this form and that the answers given by me to the foregoing questions and the statements, made by me are complete and true to the best of my knowledge and belief. I understand that any false information, omissions, or misrepresentations of facts asked for in this application may result in rejection of my application or discharge at anytime during my employment.

I authorize the City and/or its agents to verify obtain any of this information relating to my background, including, but not limited to, credit history, criminal history, and motor vehicle driving records. In this regard, while the City does not inquire into criminal history at the application phase, all individuals receiving a conditional offer of employment will be subject to a criminal history background check.

I authorize all persons, schools, companies, and law enforcement authorities to release any information concerning my background and hereby release any said persons, schools, companies, and law enforcement authorities from any liability for any damage whatsoever for issuing this information. I also understand that the use of illegal drugs is prohibited during employment. As permitted by applicable law, a medical examination, including drug screening, will be required by the City, at the City's expense.

I understand that any offer of employment will be conditional on successful completion of such medical examination, drug screening, and background examination. To the extent that I am subject to a medical examination, I agree to sign a release of medical information in connection with this such medical examination, and I understand that the results thereof relating to my capacity to perform as a City employee will be communicated to the City. I understand and agree that this release to verify information relating to my background will continue throughout my employment, if ultimately hired by the City.

☑ I agree to the above.

Signature: Clifford Sanders

Date: 28-Nov-2016

IP Address: 151.132.105.4

Simental, Alejandro

Riviera Beach
FLORIDA

Employment Application | Submitted: 04-Oct-2016

Alejandro Simental

UTILITY DISTRICT EXECUTIVE DIRECTOR

Job Location - Riviera Beach, FL
Department - Executive
Source - Other

Employment History

Please give accurate, complete full-time and part-time employment record. Start with your present or most recent employer for the last seven years working backwards. RESUMES MAY BE SUBMITTED IN ADDITION TO, BUT NOT IN PLACE OF ANY PORTION OF THE APPLICATION.

American Water MSG

Job Title: General Manager

Dates Employed From: May/2016
Dates Employed To: Sep/2016
Employment Length: 0 years, 4 months

Duties: Responsible for managing a multi-million 50-year contract between American Water and the Department of Defense's Space and Missile Testing Facility. Managed the delivery of capital programs and all operations and maintenance requirements for 14,000 customers covering over 100,000 acres.

Reason For Leaving: Company re-aligment

Supervisor Name: Aaron Balliet

Address:339 11th Street Vandenberg AFB, CA, UNITED STATES
Phone: 856.359.2037

Starting Rate of Pay: $115,000 (Salary)
Ending Rate of Pay: $115,000 (Salary)

May We Contact? Yes

Porto Barion Ltd, City of Manaus, Brazil

Job Title: Utilities Consultant

Dates Employed From: Feb/2012
Dates Employed To: May/2016
Employment Length: 4 years, 3 months

Duties: Analyzed, inspected and evaluated the city's water production and distribution systems. Identified several key operational, maintenance, asset management and training deficiencies. Worked with management to implement several operational changes thus, addressing a more than 60% lose in yearly revenue through un-accounted water.

Supervisor Name: Thais Porto

Address: Endereço Tv Do Chaco, 1767, Marco, Belem, PA, CEP 66093-541, Brasil. Belem, BRAZIL
Phone: (91) 98198 9010

Starting Rate of Pay: $85000 (Commission)

If yes, in what branch?	USAF
Describe any training received relevant to the position for which you are applying:	Utilities Systems Superintendent

Certification and Release

I certify that I have read and understand the applicant instructions on the first page of this form and that the answers given by me to the foregoing questions and the statements, made by me are complete and true to the best of my knowledge and belief. I understand that any false information, omissions, or misrepresentations of facts asked for in this application may result in rejection of my application or discharge at anytime during my employment.

I authorize the City and/or its agents to verify obtain any of this information relating to my background, including, but not limited to, credit history, criminal history, and motor vehicle driving records. In this regard, while the City does not inquire into criminal history at the application phase, all individuals receiving a conditional offer of employment will be subject to a criminal history background check.

I authorize all persons, schools, companies, and law enforcement authorities to release any information concerning my background and hereby release any said persons, schools, companies, and law enforcement authorities from any liability for any damage whatsoever for issuing this information. I also understand that the use of illegal drugs is prohibited during employment. As permitted by applicable law, a medical examination, including drug screening, will be required by the City, at the City's expense.

I understand that any offer of employment will be conditional on successful completion of such medical examination, drug screening, and background examination. To the extent that I am subject to a medical examination, I agree to sign a release of medical information in connection with this such medical examination, and I understand that the results thereof relating to my capacity to perform as a City employee will be communicated to the City. I understand and agree that this release to verify information relating to my background will continue throughout my employment, if ultimately hired by the City.

☑ I agree to the above.
Signature: Alejandro Simental
Date: 04-Oct-2016
IP Address: 71.198.121.237

Reason For Leaving: New employment opportunity in the U. S.

Ending Rate of Pay: $100000 (Commission)

May We Contact? No

City of Glendal

Job Title: Water Distribution Supervisor

Dates Employed From: Oct/2008
Dates Employed To: Nov/2011
Employment Length: 3 years, 1 month

Duties: Responsible for the daily maintenance, operational issues and emergency repairs of potable water distribution systems components. Responsible for 997 Miles of water lines and valves, 8,000 fire hydrants and over 60,000 residential and commercial water meters. Directly supervised, trained and mentored city employees, forecasted yearly budget for water distribution and storm water departments. Managed and prioritized division CIP projects

Reason For Leaving: Relocated overseas

Supervisor Name: John Henny

Address:6215 W Myrtle Ave Glendale AZ, AZ, UNITED STATES
Phone: (623) 640-1107

Starting Rate of Pay: $65000 (Salary)
Ending Rate of Pay: $65000 (Salary)

May We Contact? Yes

Education

No Education

Documents

You can provide us with your resume here and/or other supporting documents. You may either upload a file containing a formatted version, or cut & paste a text version in the space provided.

Click on the link to open the resume file if you wish to print the formatted resume.

File Name	Link
General Manager Resume _ Cover Letter 2016.doc	Download

Text Only Resume

No Text Only Resume on File

Admin Uploaded Files

There are no admin uploaded files for this applicant.

Job Questions

UTILITY DISTRICT EXECUTIVE DIRECTOR | Score Total - 30

Question	Answer	Score	Disqualifier?
Do you have a Bachelor's Degree in Civil Engineering, Environmental Engineering, or	No	0	

in a related field from an accrediated college or unversity? *		
Do you have seven (7) years of experience in water, wastewater or public works setting to include five (5) years in a management capacity with responsibility for a large division within a public utility, or any equivalent combination of training and experiences? *	Yes	0
If you do have prior management experience, how many team members have you been responsible for managing? *	More than 50 people	0
How many years of experience do you have using the Microsoft Office suite of computer software applications (including MS Word, Excel and PowerPoint)? *	More than 5 years	15
Have you completed any post-secondary education in a related field and, if so, what is the highest level completed? *	Yes, I have completed a certificate or diploma in a related field	10
Do you currently live in or near the city where this position is based or would you be willing to relocate there? *	I am willing to relocate to there	5

Additional Questions

Background Information | Score Total - 0

Question	Answer	Score	Disqualifier?
Were you previously employed by us? *	No	0	
If so, when?			
Are you a citizen of the United States? *	Yes	0	
If no, are you authorized to work in the U.S.A.?			
Will you, now or in the future, require sponsorship of employment visa status (e.g., H-1 B visa status) *	No	0	
Have you been convicted of a felony or served time? * *(Archived)*	No	0	
If yes, please provide explanation below. A conviction will not necessarily bar you from employment. FALSE STATEMENTS OR OMISSIONS OF CONVICTIONS SHALL BE JUST CAUSE FOR DISQUALIFICATION FROM	N/A		

EMPLOYMENT. Each case is evaluated in relation to the duties and responsibilities of the position for which you have applied. Details: *(Archived)*	
State names of any relatives and friends presently employed with us, indicate relationship: *	None

Job-Related Skills | Score Total - 0

Note: Do not fill out any part of the section you believe to be non-job related.

Question	Answer	Score	Disqualifier?
List languages in which you are fluent:	English Spanish Portuguese		
If the job requires, do you have the appropriate valid driver's license? *	Yes	0	
DL#:			
Type:			
State:			
Have you had any moving violations? *	No	0	
If yes, please describe:			
Please list any other skills, licenses or certificates that may be job related or that you feel would be of value to this job or company:	ADEQ Operator Certifications; Water Distribution 4, Water Treatment 2, Wastewater Treatment 2, Collections 2		
If applying for clerical position, indicate typing speed (WPM):	N/A		
Do you have or possess basic computer skills? *	Yes	0	
What types of computer software can you operate?	Microsoft Office Suit		
Do you have any physical condition which might limit your ability to perform the job for which you are applying? *	No	0	
If "Yes", Describe this condition and how you can perform the job in spite of it.			

Military | Score Total - 0

Question	Answer	Score	Disqualifier?
Did you serve in the U.S. Armed Forces? *	Yes	0	

CITY OF RIVIERA BEACH CITY COUNCIL
AGENDA ITEM SUMMARY

Meeting Date: 5/3/2017

Agenda Category: DISCUSSION AND DELIBERATION

Subject: City Manager Evaluation Criteria

Recommendation/Motion: Staff recommends Council adopt a performance evaluation matrix, as well as, set a date for the evaluation of the city manager.

Originating Dept	EXECUTIVE	**Costs**	
User Dept.	CITY COUNCIL / EXECUTIVE	**Funding Source**	
Advertised	No	**Budget Account Number**	
Date			
Paper			
Affected Parties	Not Required		

Background/Summary:

This agenda item is intended to provide the criteria by which the assessment of the City Manager's performance evaluation will be structured. On February 15, 2017, the City of Riviera Beach and the city manager, Jonathan Evans entered into an agreement whereby, within 30 days effective of the agreement signed, both parties will mutually discuss the criteria to evaluate the city manager as part of the contractual obligation stipulated in section 2, subsection B of the agreement. The city manager began his employment with the city on Monday, March 20, 2017, at 8 AM. The city manager has proffered example performance evaluations that are attached to this agenda item. Attached, you will find (3) evaluation forms that have been proffered by the Florida City/County Management Association (FCCMA), of which Mr. Evans is a member, and is the professional association that most professional administrators within the state of Florida belong to. Furthermore, the evaluation forms provided were developed by the communications committee, of which Mr. Evans was a co-chair of, as a member of the Board of Directors of this Association. The three forms offered are: a top level dimension evaluation form, a narrative evaluation form, and a performance dimension. The evaluations rate on a Likert scale from 1- unsatisfactory, to 5- excellent; topics are broken into sections applicable to city operations. The categories are as follows: professional skills and expertise, council/commission relations, citizen and public relations, policy execution, intergovernmental relations, staff and management, fiscal management, planning and organizational development, leadership and decision-making, and, lastly, individual characteristics. Based on scores in each of these individual sections, a total score is derived, divided by the total number of points available in each section and an average is computed thus, ranking the city manager's performance. This particular item is intended to adopt a standard in which the city manager will be evaluated, as well as, when the manager's evaluation should occur. It is recommended that the evaluation of the administrator occur 30 days prior to or 30 days after the anniversary of the manager's

start date. Furthermore, this item is to be placed on the agenda in the appropriate section, and to ensure that the public is notified in accordance with existing organizational policies and applicable state statutes.

At this time, staff recommends that the Council act to adopt a performance evaluation matrix, as well as set a date for the evaluation of the city manager.

Fiscal Years
Capital Expenditures
Operating Costs
External Revenues
Program Income (city)
In-kind Match (city)
Net Fiscal Impact
NO. Additional FTE Positions (cumulative)

III. Review Comments

A. Finance Department Comments:

B. Purchasing/Intergovernmental Relations/Grants Comments:

C. Department Director Review:

Contract Start Date

Contract End Date

Renewal Start Date

Renewal End Date

Number of 12 month terms this renewal

Dollar Amount

Contractor Company Name

Contractor Contact

Contractor Address

Contractor Phone Number

Contractor Email

Type of Contract

Describe

ATTACHMENTS:

File Name	Description	Upload Date	Type

Sample-Manager-Evaluation-Narrative.pdf	Sample - Manager Evaluation Narrative	4/10/2017	Cover Memo
Sample-Manager-Evaluation-Combined-Rated-by-Top-Level-Dimension.pdf	Sample Manager Evaluation Combined Rated by Top Level Dimension	4/10/2017	Cover Memo
Sample-Manager-Evaluation-Performance-Dimensions-Rated___.pdf	Sample - Manager Evaluation Performance Dimensions Rated	4/10/2017	Cover Memo

REVIEWERS:

Department	**Reviewer**	**Action**	**Date**
City Manager	Mitchell, Dorothy	Approved	5/2/2017 - 2:12 PM

Attachment 5A

OKLAWAHA COUNTY, FLORIDA

City/County Manager Performance Evaluation

City/County Manager's Name: _____

Council Member/Commissioner's Name: _____

Evaluation Period: _____ to _____

Evaluation Date: _____

Evaluation Instructions:

This form shall be completed by each member of the Council/Commission to evaluate the City/County Manager's performance during the evaluation period. Each member of the Board shall sign at the end of the form and forward it to the Human Resources Director.

Timeline:

First regularly scheduled meeting in October:	• Manager presents the Annual Report to the Council/Commission • Chairman distributes the City/County Manager's performance evaluation form
Second regularly scheduled meeting in October:	• Deadline for completion of the performance evaluation form • Commissioners are encouraged to meet with the manager to individually discuss their evaluation
First regularly scheduled meeting in November:	• The compilation of the manager's evaluation and any merit percentage increase recommended by the Chairman are presented for ratification by the Council/Commission

OKLAWAHA COUNTY, FLORIDA

City/County Manager Performance Evaluation

Narrative Evaluation:

1. Does the manager possess sufficient professional skills and expertise to be successful in this organization? Please explain.	
Response:	

2. Does the manager maintain a productive and effective relationship with the Council/Commission as well as individual members?	
Response:	

3. Does the manager work well with citizens and properly address their concerns? Also, does the manager maintain a collegial relationship with the media?	
Response:	

City/County Manager Performance Evaluation

4. Does the manager understand the ordinances, policies, and procedures of the organization and cause them to be fairly enforced?	
Response:	

5. Does the manager maintain cordial and effective relationships with other local, regional, state, and federal government agencies?	
Response:	

6. Does the manager effectively recruit, develop, and retain competent personnel?	
Response:	

7. Does the manager ensure that the annual budget meets the operational needs of the organization within the policy direction set by the Board? Is the manager an effective steward of the organization's fiscal resources?	
Response:	

8. Does the manager effectively plan for the future needs and direction of the organization? In addition, does the manager promote and maintain a healthy organizational culture?	
Response:	

9. Does the manager create a working environment conducive to others' success? Is the manager an effective consensus-builder?	
Response:	

City/County Manager Performance Evaluation

10. What are the manager's strongest personal traits? Are there other personal traits that could be improved to make the manager more effective?	
Response:	

11. In your opinion, what are the manager's top successes or achievements during the evaluation period?	
Response:	

12. What strengths has the manager demonstrated that have been most helpful to you as a council member/commissioner during the evaluation period? (Feel free to be general or include specific issues or projects which benefited from the manager's leadership.)	
Response:	

City/County Manager Performance Evaluation

13. What performance areas would you identify as needing improvement? Why?	
Response:	

14. What constructive, positive ideas can you offer the manager to enhance performance?	
Response:	

15. What other comments do you have for the manager; e.g., priorities, expectations, goals or objectives for the new rating period?	
Response:	

Evaluator's Signature: _____ **Date:** _____

OKLAWAHA COUNTY, FLORIDA

City/County Manager Performance Evaluation

City/County Manager's Name: _____

Council Member/Commissioner's Name: _____

Evaluation Period: _____ to _____

Evaluation Date: _____

Evaluation Instructions:

This form shall be completed by each member of the Council/Commission to evaluate the City/County Manager's performance in each of the areas noted below. Each member of the Board shall sign at the end of the form and forward it to the Human Resources Director. Performance levels can be noted based on the following scale:

5 – EXCELLENT:	The incumbent consistently demonstrates performance at a very high standard that significantly surpasses reasonable expectations.
4 – SUPERIOR:	The incumbent consistently demonstrates performance that generally exceeds reasonable expectations. The individual demonstrates no appreciable performance deficiencies.
3 – SATISFACTORY:	The incumbent consistently meets reasonable performance expectations. The individual demonstrates an acceptable degree of competence and performance.
2 – FAIR:	The incumbent achieves the minimum of performance expectations. The individual requires development in specific areas in order to meet reasonable expectations of performance.
1 – UNSATISFACTORY:	The incumbent frequently fails to meet minimum performance expectations.

Timeline:

First regularly scheduled meeting in October:	• Manager presents the Annual Report to the Council/Commission • Chairman distributes the City/County Manager's performance evaluation form
Second regularly scheduled meeting in October:	• Deadline for completion of the performance evaluation form • Commissioners are encouraged to meet with the manager to individually discuss their evaluation
First regularly scheduled meeting in November:	• The compilation of the manager's evaluation and any merit percentage increase recommended by the Chairman are presented for ratification by the Council/Commission

OKLAWAHA COUNTY, FLORIDA

City/County Manager Performance Evaluation

Performance Dimensions:

1. Professional Skills and Expertise	**Overall Rating:** _____ *of 5*
a. Is knowledgeable of current developments affecting the management field and affecting local governments. b. Regularly provides accurate, comprehensive reports concerning matters of importance to the organization. c. Anticipates problems and develops effective approaches for solving them. d. Offers workable alternatives when changes in the law render the administration of an ordinance or policy impractical. e. Sets a professional example by handling the affairs of the organization in a fair and impartial manner.	
Comments:	

2. Council/Commission Relations	**Overall Rating:** _____ *of 5*
a. Carries out directives of the Board as a whole rather than those of any one Board member. b. In responding the requests for information, provides complete, accurate, and timely information equally to all Board members. c. Assists the Board by resolving problems at the administrative level to avoid unnecessary Board action. d. Assists the Board in establishing policy while acknowledging the ultimate authority of the Board. e. Is willing to try new ideas proposed by Board members.	
Comments:	

3. Citizen and Public Relations	**Overall Rating:** _____ *of 5*
a. Effectively conveys to the public that the organization delivers services in a cost-effective manner without sacrificing quality and customer focus. b. Is willing to meet with members of the community and is responsive to their concerns. c. Demonstrates a dedication to service to the community and its citizens. d. Expresses information orally in a clear and concise manner when making public presentations. e. Is skillful with the news media, proactively providing information that is important to the public.	
Comments:	

4. Policy Execution	**Overall Rating:** _____ *of 5*
a. Understands, supports, and enforces the organization's ordinances, policies, and procedures. b. Clearly identifies and communicates expectations to the organization regarding the implementation of policies enacted by the Board. c. Implements Board actions in accordance with the intent of the Board. d. Supports the actions of the Board after a decision has been reached, both inside and outside the organization. e. Helps internal and external stakeholders to achieve common objectives within the parameters of established Board policies.	
Comments:	

5. Intergovernmental Relations	**Overall Rating:** _____ *of 5*
a. Promotes a positive working relationship with other governmental entities. b. Engages with other local, regional, state, and federal agencies to accomplish local initiatives. c. Positively and effectively represents the organization and its interests when working with other governmental agencies. d. Maintains awareness of laws and other issues affecting other governmental agencies which may affect the organization. e. Is willing to share resources or information with other governmental agencies as appropriate.	
Comments:	

6. Staffing and Management	**Overall Rating:** _____ *of 5*
a. Recruits and retains competent personnel for County positions. b. Is aware of staff weaknesses and works to improve their performance. c. Promotes training and development opportunities for employees at all levels of the organization. d. Stays accurately informed and concerned about employee relations. e. Is able to discern when it is necessary to assume charge of situations that would normally be handled by a subordinate and when it is necessary to only provide guidance and support.	
Comments:	

City/County Manager Performance Evaluation

7. Fiscal Management	**Overall Rating:** _____ *of 5*
a. Prepares a balanced budget to provide services at a level directed by the Board. b. Ensures that the budget meets the operational needs of the organization and makes the best possible use of available funds. c. Prepares the budget in an intelligent but readable format. d. Submits the proposed budget in a timely manner that allows for an appropriate review period. e. Appropriately monitors and manages the fiscal activities of the organization throughout the fiscal year.	
Comments:	

8. Planning and Organizational Development	**Overall Rating:** _____ *of 5*
a. Works with the Board, community leaders, and other stakeholders to develop a clear vision, mission, values, and objectives for the organization. b. Effectively prioritizes goals and objectives in order to ensure that the organization is doing "first things first" in support of its strategic plan. c. Maintains a healthy and productive organizational culture focused on customer service and responsible stewardship of the organization's resources. d. Has a capacity for and encourages innovation. e. Reviews ordinances, policies, and procedures periodically to suggest improvements.	
Comments:	

9. Leadership and Decision-Making	**Overall Rating:** _____ *of 5*
a. Leads the organization by example in adhering to its established policies, rules, and procedures, and ensures that subordinates do the same. b. Acknowledges the efforts of others and gives appropriate credit for their accomplishments. c. Is effective at building consensus among stakeholders on new or unpopular policies or initiatives. d. Makes logical decisions based on a thorough review of available information and soliciting input from appropriate sources. e. Is able to effectively make decisions rapidly in situations where information is limited and the outcome might be uncertain.	
Comments:	

10. Individual Characteristics	**Overall Rating:** _____ *of 5*
a. Consistently acts with professionalism and courtesy, including prompt attendance at meetings, returning phone calls/messages, and adhering to scheduled appointments. b. Ensures that all business conducted by the organization is free of conflicts of interest or practices that might be construed as illegal, unethical, or unprofessional. c. Is energetic, cooperative, and willing to spend whatever time is necessary to do a good job. d. Has the capacity to listen to others and to recognize their interests. e. Avoids political positions, partisanship, and unnecessary controversy.	
Comments:	

OKLAWAHA COUNTY, FLORIDA

City/County Manager Performance Evaluation

Summary:

Performance Dimension:	Overall Rating:
1. Professional Skills and Expertise	_____ *of 5*
2. Council/Commission Relations	_____ *of 5*
3. Citizen and Public Relations	_____ *of 5*
4. Policy Execution	_____ *of 5*
5. Intergovernmental Relations	_____ *of 5*
6. Staffing and Management	_____ *of 5*
7. Fiscal Management	_____ *of 5*
8. Planning and Organizational Development	_____ *of 5*
9. Leadership and Decision-Making	_____ *of 5*
10. Individual Characteristics	_____ *of 5*

Total Score: _____ of 50

Divide by 10 (total number of metrics)

Total Average Rating: ____ ***of 5***

Evaluator's Signature: _____ **Date:** _____

City/County Manager Performance Evaluation

Additional Narrative Evaluation:

1. In your opinion, what are the manager's top successes or achievements during the evaluation period?	
Response:	

2. What strengths has the manager demonstrated that have been most helpful to you as a council member/commissioner during the evaluation period? (Feel free to be general or include specific issues or projects which benefited from the manager's leadership.)	
Response:	

3. What performance areas would you identify as needing improvement? Why?	
Response:	

City/County Manager Performance Evaluation

4. What constructive, positive ideas can you offer the manager to enhance performance?	
Response:	

5. What other comments do you have for the manager; e.g., priorities, expectations, goals or objectives for the new rating period?	
Response:	

Attachment 5B

OKLAWAHA COUNTY, FLORIDA

City/County Manager Performance Evaluation

City/County Manager's Name: _____

Council Member/Commissioner's Name: _____

Evaluation Period: _____ to _____

Evaluation Date: _____

Evaluation Instructions:

This form shall be completed by each member of the Council/Commission to evaluate the City/County Manager's performance in each of the areas noted below. Each member of the Board shall sign at the end of the form and forward it to the Human Resources Director. Performance levels can be noted based on the following scale:

5 – EXCELLENT:	The incumbent consistently demonstrates performance at a very high standard that significantly surpasses reasonable expectations.
4 – SUPERIOR:	The incumbent consistently demonstrates performance that generally exceeds reasonable expectations. The individual demonstrates no appreciable performance deficiencies.
3 – SATISFACTORY:	The incumbent consistently meets reasonable performance expectations. The individual demonstrates an acceptable degree of competence and performance.
2 – FAIR:	The incumbent achieves the minimum of performance expectations. The individual requires development in specific areas in order to meet reasonable expectations of performance.
1 – UNSATISFACTORY:	The incumbent frequently fails to meet minimum performance expectations.

Timeline:

First regularly scheduled meeting in October:	• Manager presents the Annual Report to the Council/Commission • Chairman distributes the City/County Manager's performance evaluation form
Second regularly scheduled meeting in October:	• Deadline for completion of the performance evaluation form • Commissioners are encouraged to meet with the manager to individually discuss their evaluation
First regularly scheduled meeting in November:	• The compilation of the manager's evaluation and any merit percentage increase recommended by the Chairman are

OKLAWAHA COUNTY, FLORIDA

City/County Manager Performance Evaluation

presented for ratification by the Council/Commission

Performance Dimensions:

1. Professional Skills and Expertise	Rating:
a. Is knowledgeable of current developments affecting the management field and affecting local governments.	_____ *of 5*
b. Regularly provides accurate, comprehensive reports concerning matters of importance to the organization.	_____ *of 5*
c. Anticipates problems and develops effective approaches for solving them.	_____ *of 5*
d. Offers workable alternatives when changes in the law render the administration of an ordinance or policy impractical.	_____ *of 5*
e. Sets a professional example by handling the affairs of the organization in a fair and impartial manner.	_____ *of 5*
Total Rating for this Performance Dimension:	_____ *of 25*
Comments:	

2. Council/Commission Relations	Rating:
a. Carries out directives of the Board as a whole rather than those of any one Board member.	_____ *of 5*
b. In responding the requests for information, provides complete, accurate, and timely information equally to all Board members.	_____ *of 5*
c. Assists the Board by resolving problems at the administrative level to avoid unnecessary Board action.	_____ *of 5*
d. Assists the Board in establishing policy while acknowledging the ultimate authority of the Board.	_____ *of 5*
e. Is willing to try new ideas proposed by Board members.	_____ *of 5*
Total Rating for this Performance Dimension:	_____ *of 25*
Comments:	

City/County Manager Performance Evaluation

3. Citizen and Public Relations	Rating:
a. Effectively conveys to the public that the organization delivers services in a cost-effective manner without sacrificing quality and customer focus.	_____ *of 5*
b. Is willing to meet with members of the community and is responsive to their concerns.	_____ *of 5*
c. Demonstrates a dedication to service to the community and its citizens.	_____ *of 5*
d. Expresses information orally in a clear and concise manner when making public presentations.	_____ *of 5*
e. Is skillful with the news media, proactively providing information that is important to the public.	_____ *of 5*
Total Rating for this Performance Dimension:	_____ *of 25*
Comments:	

4. Policy Execution	Rating:
a. Understands, supports, and enforces the organization's ordinances, policies, and procedures.	_____ *of 5*
b. Clearly identifies and communicates expectations to the organization regarding the implementation of policies enacted by the Board.	_____ *of 5*
c. Implements Board actions in accordance with the intent of the Board.	_____ *of 5*
d. Supports the actions of the Board after a decision has been reached, both inside and outside the organization.	_____ *of 5*
e. Helps internal and external stakeholders to achieve common objectives within the parameters of established Board policies.	_____ *of 5*
Total Rating for this Performance Dimension:	_____ *of 25*
Comments:	

City/County Manager Performance Evaluation

5. Intergovernmental Relations	Rating:
a. Promotes a positive working relationship with other governmental entities.	_____ *of 5*
b. Engages with other local, regional, state, and federal agencies to accomplish local initiatives.	_____ *of 5*
c. Positively and effectively represents the organization and its interests when working with other governmental agencies.	_____ *of 5*
d. Maintains awareness of laws and other issues affecting other governmental agencies which may affect the organization.	_____ *of 5*
e. Is willing to share resources or information with other governmental agencies as appropriate.	_____ *of 5*
Total Rating for this Performance Dimension:	_____ *of 25*
Comments:	

6. Staffing and Management	Rating:
a. Recruits and retains competent personnel for County positions.	_____ *of 5*
b. Is aware of staff weaknesses and works to improve their performance.	_____ *of 5*
c. Promotes training and development opportunities for employees at all levels of the organization.	_____ *of 5*
d. Stays accurately informed and concerned about employee relations.	_____ *of 5*
e. Is able to discern when it is necessary to assume charge of situations that would normally be handled by a subordinate and when it is necessary to only provide guidance and support.	_____ *of 5*
Total Rating for this Performance Dimension:	_____ *of 25*
Comments:	

City/County Manager Performance Evaluation

7. Fiscal Management	Rating:
a. Prepares a balanced budget to provide services at a level directed by the Board.	_____ *of 5*
b. Ensures that the budget meets the operational needs of the organization and makes the best possible use of available funds.	_____ *of 5*
c. Prepares the budget in an intelligent but readable format.	_____ *of 5*
d. Submits the proposed budget in a timely manner that allows for an appropriate review period.	_____ *of 5*
e. Appropriately monitors and manages the fiscal activities of the organization throughout the fiscal year.	_____ *of 5*
Total Rating for this Performance Dimension:	_____ *of 25*
Comments:	

8. Planning and Organizational Development	Rating:
a. Works with the Board, community leaders, and other stakeholders to develop a clear vision, mission, values, and objectives for the organization.	_____ *of 5*
b. Effectively prioritizes goals and objectives in order to ensure that the organization is doing "first things first" in support of its strategic plan.	_____ *of 5*
c. Maintains a healthy and productive organizational culture focused on customer service and responsible stewardship of the organization's resources.	_____ *of 5*
d. Has a capacity for and encourages innovation.	_____ *of 5*
e. Reviews ordinances, policies, and procedures periodically to suggest improvements.	_____ *of 5*
Total Rating for this Performance Dimension:	_____ *of 25*
Comments:	

9. Leadership and Decision-Making	Rating:
a. Leads the organization by example in adhering to its established policies, rules, and procedures, and ensures that subordinates do the same.	_____ *of 5*
b. Acknowledges the efforts of others and gives appropriate credit for their accomplishments.	_____ *of 5*
c. Is effective at building consensus among stakeholders on new or unpopular policies or initiatives.	_____ *of 5*
d. Makes logical decisions based on a thorough review of available information and soliciting input from appropriate sources.	_____ *of 5*
e. Is able to effectively make decisions rapidly in situations where information is limited and the outcome might be uncertain.	_____ *of 5*
Total Rating for this Performance Dimension:	_____ *of 25*
Comments:	

10. Individual Characteristics	Rating:
a. Consistently acts with professionalism and courtesy, including prompt attendance at meetings, returning phone calls/messages, and adhering to scheduled appointments.	_____ *of 5*
b. Ensures that all business conducted by the organization is free of conflicts of interest or practices that might be construed as illegal, unethical, or unprofessional.	_____ *of 5*
c. Is energetic, cooperative, and willing to spend whatever time is necessary to do a good job.	_____ *of 5*
d. Has the capacity to listen to others and to recognize their interests.	_____ *of 5*
e. Avoids political positions, partisanship, and unnecessary controversy.	_____ *of 5*
Total Rating for this Performance Dimension:	_____ *of 25*
Comments:	

OKLAWAHA COUNTY, FLORIDA

City/County Manager Performance Evaluation

Summary:

Performance Dimension:	Overall Rating:	
1. Professional Skills and Expertise	_____	*of 25*
2. Council/Commission Relations	_____	*of 25*
3. Citizen and Public Relations	_____	*of 25*
4. Policy Execution	_____	*of 25*
5. Intergovernmental Relations	_____	*of 25*
6. Staffing and Management	_____	*of 25*
7. Fiscal Management	_____	*of 25*
8. Planning and Organizational Development	_____	*of 25*
9. Leadership and Decision-Making	_____	*of 25*
10. Individual Characteristics	_____	*of 25*

Total Score: _____ of 250

Divide by 50 (total number of metrics)

Total Average Rating: ____ ***of 5***

Evaluator's Signature: _____ **Date:** _____